EXECUTIVE SUMMARY

ON

ASSESSMENT OF COMPONENT-WISE AT&C LOSSES FOR KARNATAKA STATE

VOLUME-I

REPORT BY

MECON LIMITED

(A Govt. of India Enterprise)

MARCH 2014

ACKNOWLEDGEMENT

MECON Limited would like to express its thanks for the strong support provided by all the associates during the Study of "Component-wise AT&C Loss for the State of Karnataka".

MECON gratefully acknowledges the efforts of the Forum of Regulators (FOR) for their substantial guidance, support and lending coordination with Power utility throughout the course of this study. Additionally, special thanks to the Power Finance Corporation Limited (PFC) for their assistance from time to time.

We also acknowledge the assistance of the Karnataka Electricity Regulatory Commission for their active support during the Site Survey. Thanks also to the Power Utility (i.e. BESCOM, HESCOM, GESCOM, MESCOM & CESCOM) of Karnataka for their numerous assistance.

CONTENTS

		Page No.
1.	INTRODUCTION	1
2.	BACKGROUND OF THE NOVEL ASSIGNMENT	2
3.	OBJECTIVE OF THE PROJECT	4
4.	PURPOSE OF THE REPORT	5
5.	SCOPE OF WORK OF THE CONSULTANT	6
6.	POWER SCENARION OF THE STATE KARNATAKA	8
7.	PRESENT POWER UTILITIES OF KARNATAKA	9
8.	AGGREGATE TECHNICAL & COMMERCIAL (AT&C) LOSS	11
9.	METHODOLOGY	16
	9.1 METHODOLOGY FOR SELECTION OF ZONES & CIRCLES	
	9.2 AT& C LOSS ASSESSMENT METHODOLOGY	
	9.2.1 METHODOLOGY FOR SITE SURVEY & COLLECTION OF DATA	
	9.2.2 METHODOLOGY FOR COMPUTATION OF THE AT& C LOSS OF THE FOUR REPRESENTATIVE CIRCLES OF KARNATAKA	
	9.2.3 METHODOLOGY FOR EXTRAPOLATION OF THE AT& C LOSS OF THE FOUR REPRESENTATIVE CIRCLES OF KARNATAKA	
	9.3 WORKSHOP ON DRAFT REPORT	
	9.4 FINAL STUDY REPORT	
10.	PARTICIPATION OF THE UTILITIES & INTERVENTION OF THE FOR	33
11.	INTERCONNECTING POWER NETWORK	34
	11.1 POWER NETWORK OF BANGALORE SOUTH CIRCLE	
	11.2 POWER NETWORK OF HUBLI CIRCLE	
	11.3 POWER NETWORK OF GULBERGA CIRCLE	
	11.4 POWER NETWORK OF CHIKKODI CIRCLE	
12.	COMPUTATION OF COMPONENT-WISE AT&C LOSS	38
	12.1 COMPUTATION OF 33 KV LOSS	
	12.2 COMPUTATION OF 11 KV LOSS	
	12.3 COMPUTATION OF LT LOSS	
	12.4 COMPUTATION OF COMMERCIAL LOSS	
	12.5 COMPUTATION OF LOSS DUE TO UNREALIZED REVENUE	
13.	EXTRAPOLATION OF AT&C LOSS FOR THE STATE KARNATAKA	46
14.	CORRECTIVE MEASURES	53
15.	CONCLUSION	57

1. INTRODUCTION

At present the Energy Losses percentage in India is much higher in comparison to other developing Countries in the world. The Ministry of Power (MoP), Government of India has initiated different types of scheme to reduce the losses of Sub-transmission & Distribution System.

The Aggregate Technical and Commercial (AT&C) losses in the distribution system comprises of two major components i.e. technical loss and commercial loss. The technical loss refers to the distribution network loss that is inherent in the delivery of the electrical energy. It includes losses in the conductors, transformers, switchgears and loss in the measurement system. The commercial loss is energy losses that are caused by external factors to the distribution system and is caused by direct energy theft, and deficiencies in the energy metering, billing and collection systems, etc.

The AT&C losses are one of the key indicators to gauge the performance of the distribution companies (DISCOMs). The technical loss in the distribution system is an engineering issue. The technical loss beyond limit represents shortcomings in the distribution system planning. The commercial loss, on the other hand is an avoidable financial loss for the DISCOMs.

2. BACKGROUND OF THE NOVEL ASSIGNMENT :

India is a fast growing economy. But the Power Sector growth is not matched with the growth in Industry Sector. There is a huge deficit of Electrical power in the country and the gap is growing. Total installed capacity in the country as on October 2012 stands at 209276 MW. The peak power deficit during the first six months of the current financial year (2012-13) was around 12000 MW. Over 300 million people in India still don't have access to electricity. Of those who do, almost all find electricity supply intermittent and unreliable.

In order to address this problem, a two pronged approach is needed. One : increase of installed capacity by adding more power plants. Two : reduction of the power loss at the transmission and distribution level.

Average transmission, distribution and consumer-level losses in the country exceeds 30% compared to world average of less than 15%. Both technical and non-technical factors contribute to these losses, but quantifying their proportions is difficult. High level of energy losses resulting in uneconomical services is a matter of concern and the biggest challenge to the reform programme undertaken in the power sector today. The concerted efforts & guidelines outlined in The Electricity Act 2003 and its downstream policies lay, besides others, a special emphasis for the need for a time bound programme on AT&C loss reduction by the SERCs.

The Government has set a target of reducing the T&D losses to 17.1% by 2017 & to 14.1% by 2022.

A need has, therefore, been felt for commissioning a study for the segregation of power losses under various heads. FOR (Forum Of Regulators) have prepared a guideline for the study and assessment of component-wise AT&C losses. In order to implement the same, Power Finance Corporation (PFC) has initiated a study to assess the component-wise AT&C losses in three (3) states of India, namely Karnataka, Maharashtra and Madhya Pradesh with the objective of correctly identifying and assessing the two major components of AT&C losses, viz. technical losses & commercial losses and then to segregate various subcomponents of commercial losses. The findings from the study will form the basis of action plan for improvement of energy efficiency at all levels by introducing specific & sustainable loss reduction strategies, new capital investment and action plan for maintenance upgradation.

MECON Limited (hereinafter referred to as "Consultant") has been appointed by PFC vide contract dated 18th October 2012 (against LOA No. 02:07:01:RR:2011: AT&C-III:LOA-VI dtd. 09.10.2012) to undertake the Study on assessment of component wise AT&C losses for the state of Karnataka.

The Forum of Regulators (FOR), the apex body of the Electricity Regulatory Commissions in India, will monitor and review the activities of the Consultant and facilitate the tasks of collection of relevant information from the distribution companies (DICSOMs) and preparation of the study report.

3. OBJECTIVE OF THE PROJECT :

The main objectives of the project are to achieve efficiency gains and making necessary changes to make the Company commercially viable, progressively self sustainable and less government dependent and at the same time, balancing the interest of the consumers in regard to quality of service and economical tariff. The plan would include among other things, metering, billing, collection, identifying the present deficiencies and the improvements to be made, mapping supply feeders, measurement of energy supplied to feeders and energy audit, study of losses and scheme for progressive reduction, reduction in input costs, consumer affairs handling, investments required for improvements in the distribution system etc.

To achieve these noble objectives for the sake of the nation, the intention is to reduce the AT& C Loss & to strengthen the entire power distribution in all possible aspects. Hence assessment of different components of AT& C Loss should be computed to tally with the published results so that the company may get aware of the targeted & present loss scenario. This Assessment will finally help them to step into their goal.

4. PURPOSE OF THE REPORT :

The main purpose of the report is to implement the proper corrective measures to reduce Aggregate Technical & Commercial Losses and making the Distribution System viable and profit making centre. Along with this, a balance between the quality service and logic tariff is to be maintained to safeguard the interest of consumers.

The entire report for the state of Karnataka comprises of three (3) different volumes i.e; ***Volume-I, Volume-II and Volume-III***.

Volume-I *is the Executive Summary for Assessment of Component-wise AT&C Loss* whereas ***Volume-II*** *deals with all the computation details* and ***Volume-III*** *with necessary drawings and diagrams.*

5. SCOPE OF WORK OF THE CONSULTANT :

The FOR has prepared and submitted "A Report on Loss Reduction Strategies" which is available in their corporate website. The study by the Consultant shall be in line with the methodology as suggested in the report. The broad scope of work of the Consultant shall be as follows :

1. To identify the specific components of AT&C losses. The components are :

   a) Distribution loss at 33 KV, 11 KV and LV

   b) Commercial loss (inefficiency in metering including defective meters, inefficiency in billing, inefficiency in collection of billed amount)

   c) Energy loss through theft/pilferage

2. To focus on calculating the overall AT&C losses followed by identification and calculation of various components of AT&C losses in the following manner :

   a) **Technical losses** may be calculated as :

   - **Technical losses in the 33 kV system of DISCOM :** Technical energy losses can be computed from the difference of energy recorded by the energy meters at the injection points and energy sent out.

   - **Technical loss in the 11 kV system of DISCOM :** All the 11 kV feeders has been considered. It will be ensured by the respective DISCOM that meters of all consumers on the feeders are tested and incorrect/burnt/stopped meter, if any, is replaced by correct meter and there is no case of direct theft etc. Technical losses in such feeders may be arrived at as difference between the sending end energy and receiving end energy at consumer end (for 11 kV consumers) plus energy recorded at LV side of distribution transformers.

   - **Technical losses in the LV system of DISCOM :** Technical losses in the LV system shall be obtained by the difference of recorded metered energy data at DTR secondary level and billed energy data of the customers connected to that DTR. Prior to that it has to be

ensured by the respective DISCOM that meters of all consumers on these sample DTR are tested and incorrect/burnt/stopped meter, if any, is replaced by correct meter, unmetered consumers are provided with correct tested meters and there is no case of direct theft etc. Weighted average of such results can be applied to all the energy handled to arrive at total technical energy loss in LV systems.

- **Overall technical loss :** The results of the above samples studied can be extrapolated to compute the overall technical losses in the distribution system. The sampling methodology, sample size, correction factor, requirement for special consideration for rural/ agriculture feeders etc. would be decided in consultation with FOR secretariat.

b) The Commercial losses can now be identified as the difference between overall energy losses and the technical losses calculated. However, the different components of commercial losses should be separately identified and calculated.

3. A **workshop** shall be organized at a suitable date in consultation with the FOR Secretariat for deliberating on the draft report for refining the report. Methodology adopted for the study will be deliberated in detail in the workshop. Comments from the FOR on the draft report will be recorded for incorporation in the report. Any further comment (from FOR and PFC) on the draft report after the workshop shall be officially communicated to the consultant for incorporation in the final report.

4. **Final Study Report**

The **Final Study report** for the entire utility/state shall be the outcome of the workshop on draft report and any subsequent comments / feedback received from the FOR on the draft report.

6. POWER SCENARIO OF THE STATE KARNATAKA

The state of Karnataka is located in the southern region of India with installed Electricity generation capacity of 13596 MW (as on 31st January 2013). Karnataka constitutes 6% of the total installed Electricity Generation capacity of India which is mainly from fossil fuels such as coal and natural gas. Private Sector has a 35% share in the total installed capacity, implying a healthy investment environment. Renewable power forms 24% of the total installed capacity.

In order to improve the performance of the Power Sector in the State Government of Karnataka, they have restructured the Power Sector time to time and the present Institutional structure of Power Sector is given below :

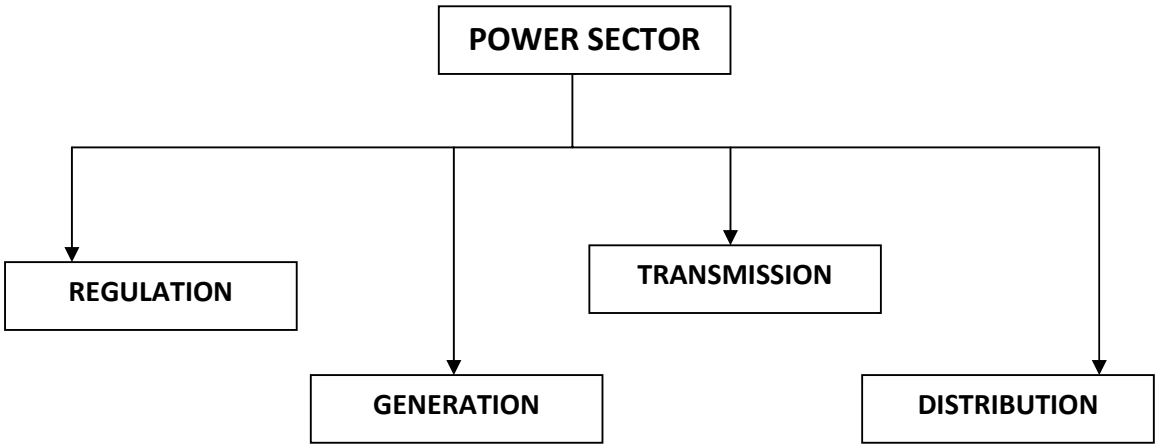

7. PRESENT POWER UTILITIES OF KARNATAKA :

The following five (5) Electric Supply Companies are found to be responsible for the entire power distribution of the State, Karnataka.

In order to improve the performance of the Power Sector the Government of Karnataka has formed following Power Supply Companies in the year 2002 & 2005 as wholly owned Government of Karnataka Corporations under the Companies Act, 1956 to undertake activities of distribution and retail supply for and on behalf of Karnataka State Electricity Board :

a. Bangalore Electric Supply Company Limited (BESCOM)
b. Hubli Electric Supply Company (HESCOM)
c. Gulbarga Electric Supply Company Limited (GESCOM)
d. Mangalore Electric Supply Company Limited (MESCOM)
e. Chamundeshwari Electric Supply Company Limited (CESCOM)

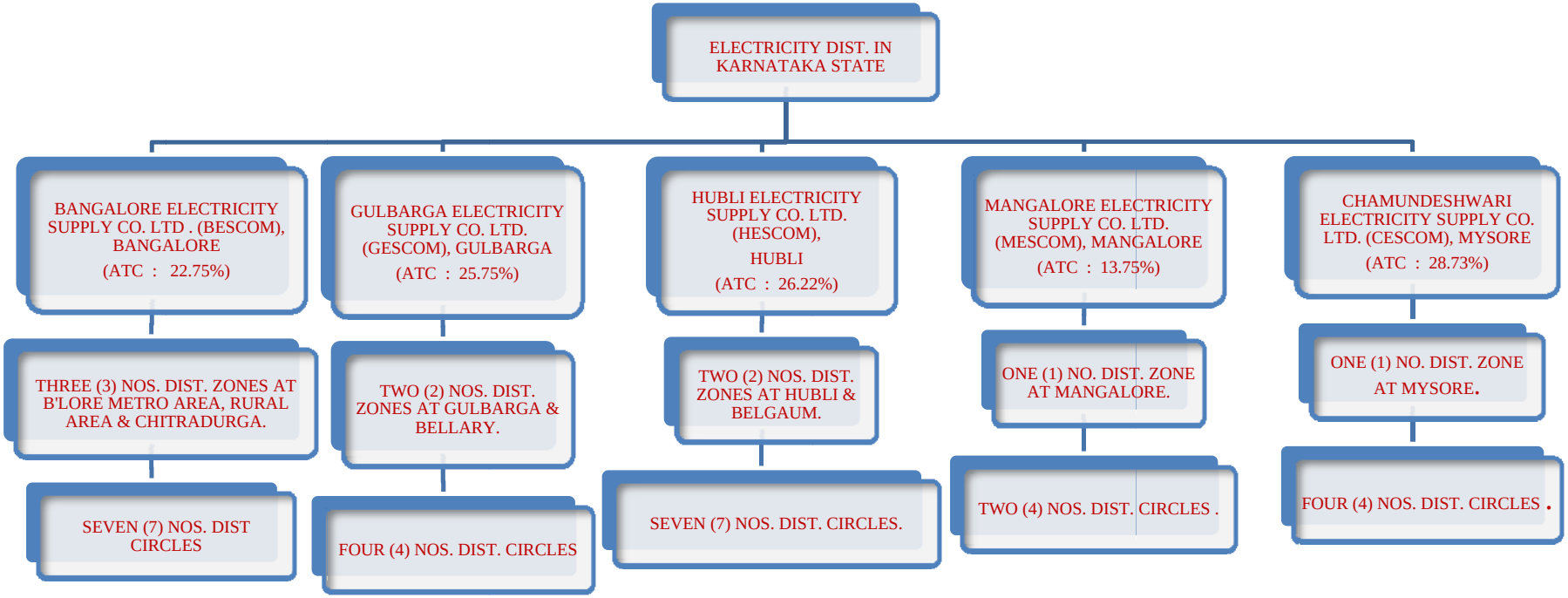

Note : *The figures in parenthesis below the name of each utility represents the respective AT&C Loss figures pertaining to that utility for FY 2010-11 as obtained from PFC Website under : " ATC Losses for all DISCOMs of Unbundled States".*

8. AGGREGATE TECHNICAL & COMMERCIAL (AT&C) LOSS :

Aggregate Technical & Commercial Loss or AT & C Loss can be defined as the summation of all technical as well as commercial power loss that occurs due to electrical power flow through sub-transmission and distribution network.

1. Technical Loss can be defined as the summation of power loss through 33 kV, 11 kV line and LT line loss including transformer loss and others.
2. Commercial Loss can be defined as the summation of power loss occurring due to theft/ pilferage, deficient meter, inefficiency in billing & unrealized revenue due to collection inefficiency.

9.0 METHODOLOGY :

The kick off meeting for the project was held between the FOR Secretariat and the Consultant at CERC, New Delhi on 8th. November 2012 to frame the overall guiding policies of the project. The assessment study was carried out in three (3) interlinked steps : Preliminary Investigation, Detailed Investigation (including site survey) and Final activity (i.e. Preparation of Report). The inception report was submitted and same was approved by FOR. Based on the inception report study has been initiated.

9.1 METHODOLOGY FOR SELECTION OF ZONES & CIRCLES :

Preliminary investigation for selection of Representative circles was started after the name and contact details of the Nodal officer for the state were communicated to the consultant. ***The nodal officer had informed to the consultant, the list of DISCOMS to be considered for the study.*** At the very beginning, the concerned state was divided into four zones (based on consumer mix) covering all the Circles from the listed DISCOMS and considering the FOR guidelines. This division was, to the extent possible, based on the available information at hand regarding the stratified random sampling of the customer classes and the AT&C losses recorded for the FY 2011-12. The division of zones necessarily addressed the following facts :

a) All zones mixed & matched with urban & rural customers fed from pure urban/ pure rural/ mixed category feeders.

b) Load variance in one class of customer was considered as small as possible among all the zones.

c) The numbers of classes were taken to be moderate, representative the most important of all.

d) The classes were selected in such a fashion that they could be easily linked with the concerned state power utility's database for obtaining quick & accurate recorded data of the consumption and other parameters.

Each zone comprises of a number of distribution circles headed by an Officer belonging to the rank of Superintending Engineer. Out of the circles of one zone, a representative Circle (possibly the biggest one in terms of the input energy of the circle, number of consumers, their range, metering status of the circle with number of unmetered consumers and AT&C loss figure of the circle etc.) was selected in consultation with FOR Secretariat for detailed study & loss analysis.

Note: *The Assessment Study encompassed Government Power Utilities only in the State of Karnataka.*

Details of Distribution Zones & Circles of BESCOM, Bangalore

Sl. No.	Name of the Dist. Zone	Name of the Dist. Circle
1	Bangalore Metropolitan Area	Bangalore South
2		Bangalore North
3		Bangalore East
4	Bangalore Rural Area	Bangalore Rural
5		Kolar
6	Chitradurga	Davangere
7		Tumkur

Details of Distribution Zones & Circles of GESCOM, Gulbarga

Sl. No.	Name of the Dist. Zone	Name of the Dist. Circle.
8	Gulbarga	Gulbarga
9		Bidar
10	Bellary	Bellary
11		Raichur

Details of Distribution Zones & Circles of HESCOM, Hubli

Sl. No.	Name of the Dist. Zone	Name of the Dist. Circle.
12	Hubli O & M	Hubli
13		Haveri
14		Sirsi
15	Belgaum O & M	Belgaum
16		Chikkodi
17		Bijapur
18		Bagalkot

Details of Distribution Zones & Circles of MESCOM, Manglore

Sl. No.	Name of the Dist. Zone	Name of the Dist. Circle.
19	Mangalore	Mangalore O & M
20		Udupi
21		Shimoga
22		Chikmaglur

Details of Distribution Zones & Circles of CESCOM, Mysore

Sl. No.	Name of the Dist. Zone	Name of the Dist. Circle.
23	Zonal Office, CESCOM	Mysore Works
24		Mysore O&M
25		Mandya
26		Hassan

TABLE-1: CHARACTERISTICS OF THE ZONES (As per Consumer Mix)			
Sl.No.	**Zone Name**	**Load Characteristics of Zone**	**Number of Circles under the Zone**
1	Zone-1	Purely Urban Loads with almost non existing Agricultural Load	3
2	Zone-2	Semi Urban Load (Type-I) having Commercial Load solely more than the Agricultural Load	2
3	Zone-3	Semi Urban Load (Type-II) having Commercial , Industrial and Govt. & Other Loads together more than the Agricultural Load	9
4	Zone-4	Circles having Agricultural Load which is more than Commercial, LT Industrial, Govt. & Others and HT Bulk taken together.	12

SELECTION OF ZONE-1 :

Characteristics of Load :

1) Purely Urban Loads with almost non existing Agricultural Load(less than 0.5%) in all the Circles.

TABLE-2: SELECTION OF ZONE-1 : (As per Consumer Mix)						
ZONE-1 (Three Circles) : Purely Urban Loads with almost non existing Agricultural Load (Agricultural Load Less than 1%)						
CIRCLE	% Consumer Mix					
	Domestic	Commercial	LT Indus-trial	Agricultural	Govt. & Others	HT Bulk
B'lore South	83.00	10.00	1.00	0.48	5.00	0.04
B'lore North	83.54	10.82	2.27	0.39	2.90	0.08
B'lore East	80.38	17.03	1.46	0.21	0.73	0.19

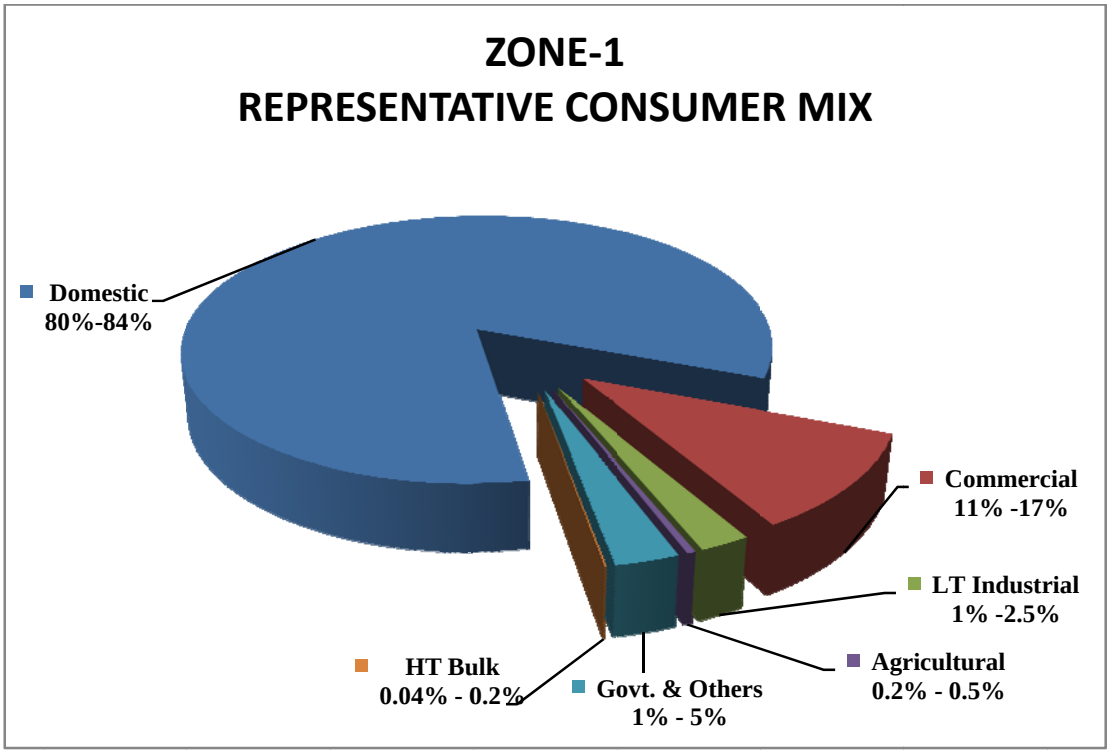

SELECTION OF REPRESENTATIVE CIRCLE IN ZONE-1 :

Criteria for Sample Circle Selection:

1. Criteria-I : Number of Consumers : B'LORE SOUTH Circle tops the list having maximum number followed by B'LORE NORTH & B'LORE EAST Circle .

2. Criteria-II : AT&C Loss Figure : B'LORE North Circle having the maximum & significant value of AT&C loss compared to other two circles. Both B'LORE East Circle and B'LORE SOUTH Circles have low value of % AT&C Loss.

3. Criteria-III : Status of Metering : B'LORE East Circle tops the list considering metering in 11 kV and down below followed by B'LORE SOUTH Circle.

4. Criteria-IV : Input Energy : B'LORE SOUTH Circle shows the highest value of input energy.

TABLE-3: SELECTION OF CIRCLE IN ZONE-1 :

ZONE-1 (Three Circles) : Purely Urban Loads with almost non existent Agricultural Load (Agricultural Load Less than 1%)

CIRCLE	PARAMETERS FOR SELECTION								
	INPUT ENERGY(MU)		TOTAL CONSUMERS		% AT&C LOSS (FY 2011-12)	% METERING			
	ABSOLUTE VALUE	PERCENTILE	NUMBER	PERCENTILE		33 KV OR 66 KV LEVEL IN PRIMARY SUB-STATION	11KV LEVEL IN PRIMARY SUB-STATION	DTR LV SIDE	CONSUMER LEVEL (HT & LT)
B'lore North	4314.22	0.95	1006436	0.79	10.95	66KV-100%	100.00	70.90	99.92
B'lore East	3278.86	0.72	904001	0.71	7.81	66KV-100%	100.00	86.07	100.00
B'lore South	4564.65	1	1270401	1.00	6.74	66KV-100%	100.00	84.00	100.00

Final Selection :

Considering all the above criteria Bangalore South Circle was selected finally as the representative Circle under this Zone for further study.

SELECTION OF ZONE-2 :

Characteristics of Load:

1) Commercial Load solely is more than the Agricultural Load in all the Circles.

TABLE-4: SELECTION OF ZONE-2 :						
ZONE-2 (Two Circles) : Semi Urban Load (Type-I) having Commercial Load solely more than the Agricultural Load						
Circle	% Consumer Mix					
	Domestic	Commercial	LT Indus-trial	Agricultural	Govt. & Others	HT Bulk
Hubli	82.80	7.98	1.80	5.55	1.81	0.06
Mysore Works	67.55	9.74	1.31	4.53	16.75	0.12

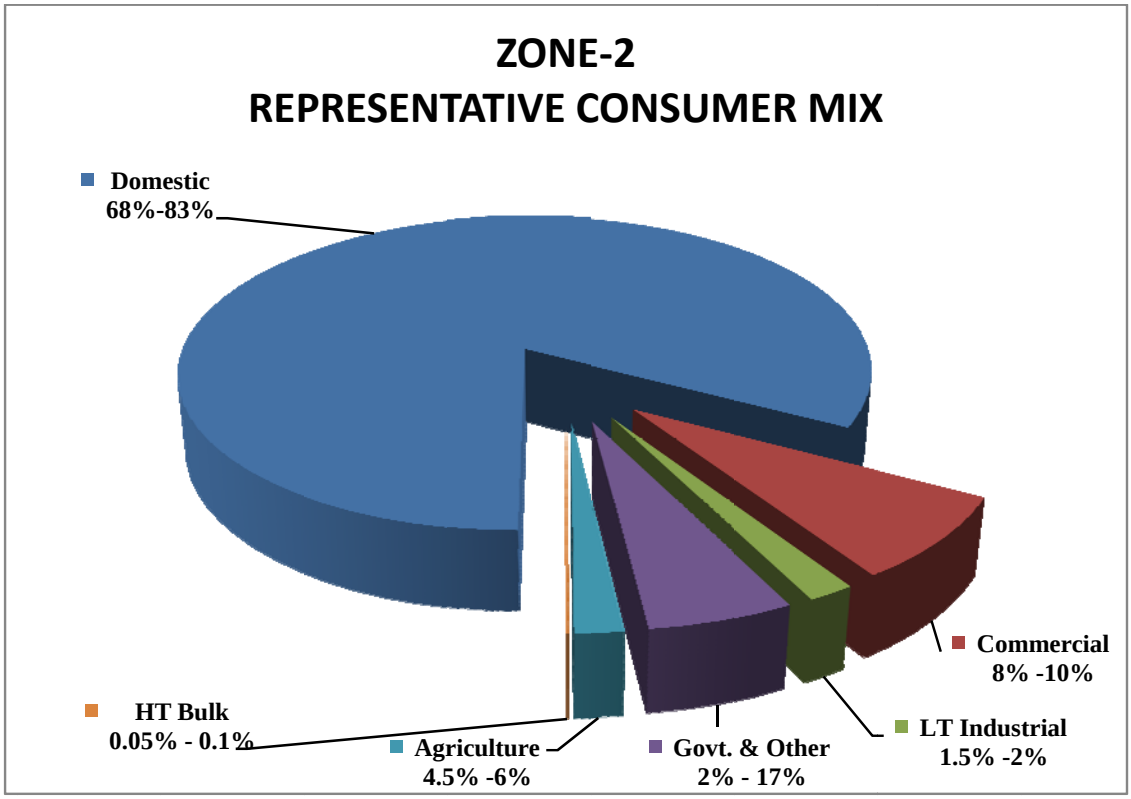

SELECTION OF CIRCLE IN ZONE-2 :

Criteria for Sample Circle Selection

Criteria-I	**Number of Consumers :**	**Hubli Circle** tops the list having maximum number. Mysore Works is second in the list.
Criteria-II	**AT&C Loss Figure :**	**Hubli Circle** consists of two divisions - Dharwad & Gadag - with widely varying figures of AT & C losses . Whereas Mysore Works has a nominal value.
Criteria-III	**Status of Metering :**	Both Hubli & Mysore works Circles have good Metering status in 33 kV, 11 kV and at Consumer level. However, **Hubli Circle** has the highest metering status in DTR LV side than the Mysore Works Circle.
Criteria-IV	**Input Energy**	**Hubli Circle** is second in terms of input energy.

ZONE-2 (Two Circles) : Semi Urban Load (Type-I) having Commercial Load solely more than the Agricultural Load

Circle	Parameters For Selection								
	Input Energy (MU)		Total Consumers		% AT&C Loss (FY 2011-12)	% Metering			
	Absolute Value	Percentile	Number	Percentile		33 kV Level in PRIMARY SUB-STATION	11 kV Level in PRIMARY SUB-STATION	DTR LV Side	Consumer Level (HT & LT)
HUBLI	1298.74	0.79	656392	1	Dharwad - 13.21 Gadag - 27.3	100.00	100.00	75.00	91.78
MYSORE WORKS	1654.32	1	594447	0.91	15.25	100.00	100.00	45.16	97.73

Final Selection:

Considering all the above criteria, HUBLI Circle was selected finally as the representative Circle under this Zone for further study.

SELECTION OF ZONE-3 :

Characteristics of Load:

1) Agricultural Load is more than 9% but less than 12.5% in all the Circles.

2) Aggregate of Commercial, LT Industrial, Govt. & Others and HT Bulk varies from 11% to 33% of total loads of respective Circles.

3) Agricultural load is less than the Aggregate of Commercial, LT Industrial, Govt. & Others and HT Bulk for all of the Circles.

ZONE-3 (Nine Circles) : Semi Urban Load (Type-II) having Commercial , Industrial and Govt. & Other Loads together more than the Agricultural Load						
CIRCLE	% Consumer Mix					
	Domestic	Commercial	LT Industrial	Agricultural	Govt. & Others	HT Bulk
Gulbarga	77.77	8.51	2.5	9.42	1.76	0.04
Shimoga	60.22	8.00	1.23	10.05	20.47	0.04
Bellary	79.2	7.61	1.54	10.30	1.27	0.09
Mysore O&M	55.41	5.94	0.97	11.14	26.51	0.03
Belgaum	75.20	8.11	3.22	11.43	1.97	0.07
Mangalore/Dk	72.13	9.96	1.01	11.59	5.22	0.10
Hassan	58.32	5.87	1.12	11.73	22.92	0.04
Chikmangalur	61.42	6.88	1.19	12.23	18.26	0.02
Mandya	56.74	6.32	1.67	12.47	22.76	0.04

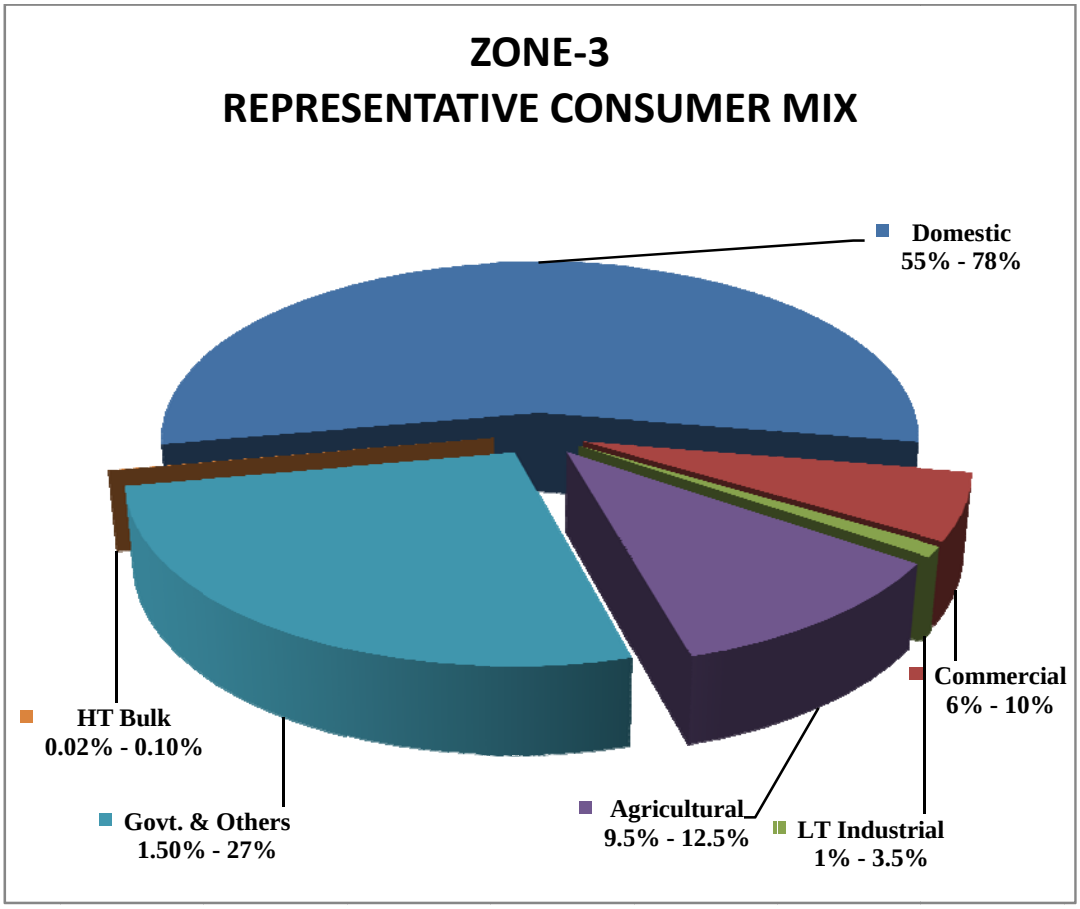
ZONE-3
REPRESENTATIVE CONSUMER MIX
Domestic
55% - 78%
Commercial
6% - 10%
LT Industrial
1% - 3.5%
Agricultural
9.5% - 12.5%
Govt. & Others
1.50% - 27%
HT Bulk
0.02% - 0.10%

SELECTION OF CIRCLE IN ZONE-3 :

Criteria for Sample Circle Selection

Criteria-I	**Number of Consumers**	Mysore O&M has highest consumer number followed by **Gulbarga**, Mangalore DK, Bellary & Others. Bellary is amongst the top four Circles. Shimoga & Chikmangalur are last in the list.
Criteria-II	**AT&C Loss Figure :**	The Circle Bellary has the most median value followed by Hassan, **Gulbarga** & Mandya for % AT&C Loss whereas Mysore O&M, Belgaum Circles have higher values than the median value. The Circles Shimoga, Chickmangalur & Mangalore/DK have lower AT&C loss % than the median value.
Criteria-III	**Status of Metering**	As per available data, Shimoga Circle has highest % of Metering in all Voltage Levels. **Gulbarga circle** also having a satisfactory metering level in all voltage level.
Criteria-IV	**Input Energy :**	Belgaum Circle tops the list having highest Input Energy closely followed by Bellary, **Gulbarga** & others.

ZONE-3 (Nine Circles) : Semi Urban Load (Type-II) having Commercial, Industrial and Govt. & Other Loads together more than the Agricultural Load									
CIRCLE	PARAMETERS FOR SELECTION								
	INPUT ENERGY(MU)		TOTAL CONSUMERS		% AT&C LOSS (FY 2011-12)	% METERING			
	ABSOLUTE VALUE	PERCENTILE	NUMBER	PERCENTILE		33 KV LEVEL IN PRIMARY SUB-STATION	11KV LEVEL IN PRIMARY SUB-STATION	DTR LV SIDE	CONSUMER LEVEL (HT & LT)
Gulbarga	1726.63	0.82	715642	0.99	24.10	100.00	97.62	63.72	83.82
Shimoga	1225.19	0.58	511998	0.71	20.95	100.00	100.00	55.96	96.54
Bellary	1875.09	0.89	591925	0.82	23.37	100.00	99.77	33.10	76.54
Mysore O&M	1330.72	0.63	724965	1	29.98	66 kV - 100%	100.00	32.50	93.18
Belgaum	2111.98	1	573121	0.79	29.69	100.00	100.00	24.68	90.62
Mangalore/ Dk	1576.11	0.75	605569	0.84	13.73	100.00	100.00	24.57	100.00
Hassan	1068.91	0.51	590217	0.81	24.38	66 kV - 100%	100.00	11.23	91.14
Chikmangalur	663.38	0.31	358753	0.49	20.95	100.00	100.00	59.07	84.98
Mandya	1497.64	0.71	547963	0.76	25.20	66 kV - 100%	100.00	20.19	89.74

Final Selection:

Considering all the above criteria, Gulbarga Circle was selected finally as the representative Circle under this Zone for further study.

SELECTION OF ZONE-4 :

Characteristics of Load :

1) Agricultural Load is prominent and more than 11.5% in all the Circles.
2) Aggregate of Commercial, LT Industrial, Govt. & Others and HT Bulk varies from 8 % to 14 % of total loads of respective cities.
3) Agricultural load far exceeds the Aggregate of Commercial, LT Industrial, Govt. & Others and HT Bulk in majority of the Circles.

ZONE-4 (Twelve Circles) : Circles having Agricultural Load which is more than Commercial, LT Industrial, Govt. & Others and HT Bulk taken together						
CIRCLE	% Consumer Mix					
	Domestic	Commercial	LT Industrial	Agricultural	Govt. & Others	HT Bulk
SIRSI	77.47	7.96	1.19	11.74	1.60	0.04
B'LORE RURAL	76.54	7.18	3.25	12.79	0.06	0.19
HAVERI	78.17	6.07	1.34	12.88	1.50	0.04
RAICHUR	75.57	7.18	1.68	13.69	1.79	0.08
UDUPI	70.90	9.40	1.29	15.31	3.01	0.10
BIDAR	72.56	8.28	1.95	15.73	1.45	0.04
DAVANGERE	73.96	6.00	1.36	16.72	1.92	0.03
KOLAR	71.52	7.07	1.73	17.06	2.59	0.03
BIJAPUR	69.70	6.67	1.99	20.65	0.97	0.03
TUMKUR	70.44	5.71	1.43	21.01	1.38	0.03
BAGALKOT	62.14	7.98	4.08	24.30	1.42	0.08
CHIKKODI	64.62	5.06	2.24	27.17	0.89	0.03

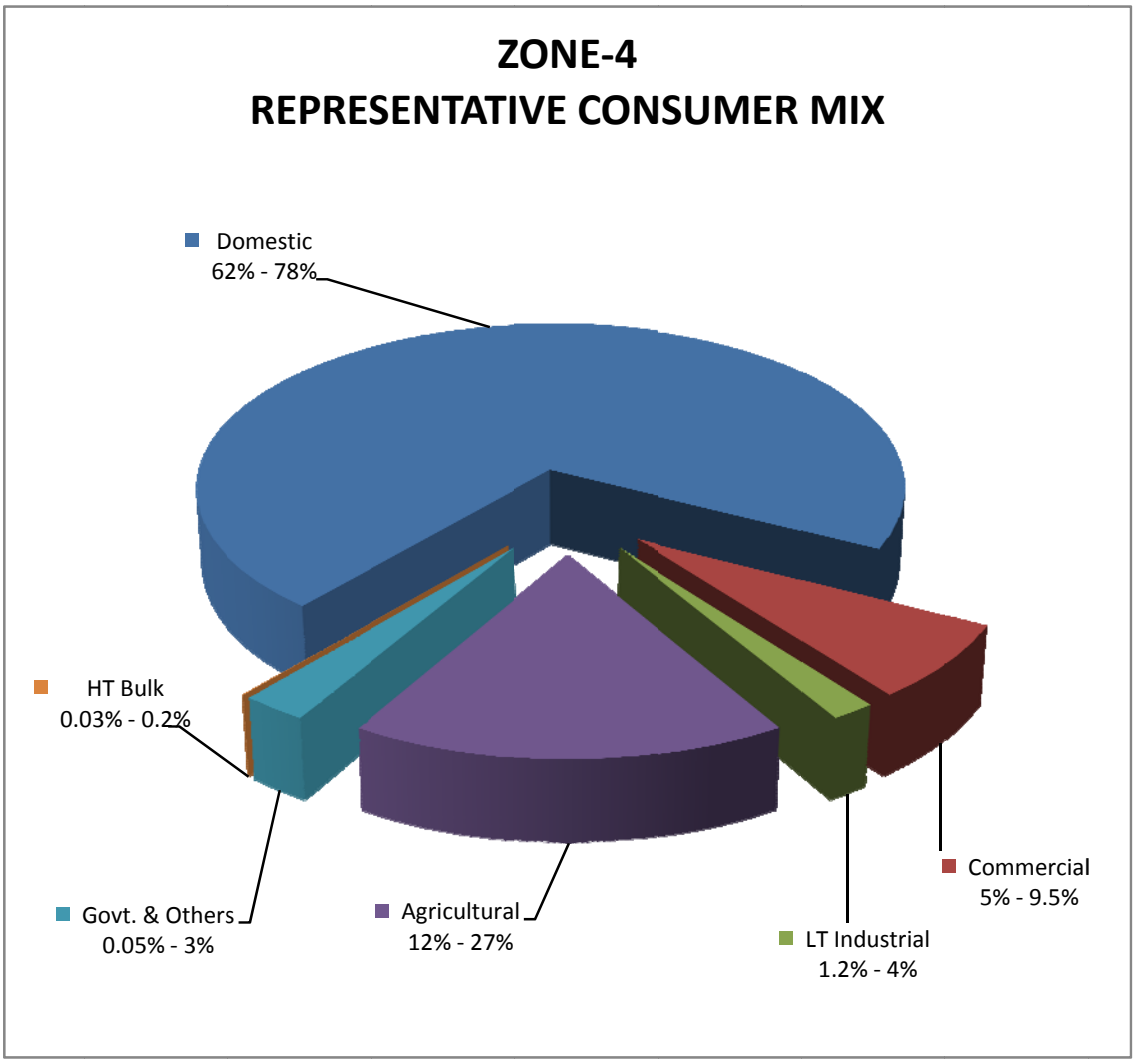
ZONE-4
REPRESENTATIVE CONSUMER MIX
Domestic
62% - 78%
HT Bulk
0.03% - 0.2%
Govt. & Others
0.05% - 3%
Agricultural
12% - 27%
LT Industrial
1.2% - 4%
Commercial
5% - 9.5%

SELECTION OF CIRCLE IN ZONE-4 :

Criteria for Sample Circle Selection

Criterion-I	Number of Consumers :	Banglaore Rural Tops the list followed by Davangere, Kolar and others.
Criterion-II	AT&C Loss Figure :	Bagalkot, Raichur & Davangere Circles have the values of AT&C Losses close to the median value. **Chikkodi**, Kolar & Bijapur Circles have higher value of AT&C Losses.
Criterion-III	Status of Metering :	**Chikkodi Circle** has highest % Metering Value. However Davangere Circle has balanced percentage metering at all levels.
Criteria-IV	Input Energy :	B'LORE RURAL has the highest input energy followed by Davangere,Tumkur, Kolar and others.

ZONE-4 (Twelve Circles) : Circles having Agricultural Load which is more than Commercial, LT Industrial, Govt. & Others and HT Bulk taken together									
CIRCLE	PARAMETERS FOR SELECTION								
	INPUT ENERGY(MU)		TOTAL CONSUMERS		% AT&C LOSS (FY 2011-12)	% METERING			
	ABSOLUTE VALUE	PERCENTILE	NUMBER	PERCENTILE		33 KV LEVEL IN PRIMARY SUB-STATION	11KV LEVEL IN PRIMARY SUB-STATION	DTR LV SIDE	CONSUMER LEVEL (HT & LT)
SIRSI	577.14	0.14	417561	0.38	30.02	100.00	100.00	46.46	99.00
B'LORE RURAL	4203.51	1	1085082	1.00	13.36	66KV-100%	100.00	24.00	89.50
HAVERI	741.47	0.18	391584	0.36	28.48	100.00	100.00	33.00	81.00
RAICHUR	2422.12	0.58	670967	0.62	20.42	100.00	99.38	32.75	64.20
UDUPI	689.70	0.16	360580	0.33	9.86	100.00	100.00	13.96	100.00
BIDAR	926.67	0.22	372328	0.34	19.29	100.00	100.00	69.59	78.82
DAVANGERE	2647.91	0.63	988552	0.91	20.12	66KV-100%	100.00	26.93	83.41
KOLAR	2578.96	0.61	938498	0.86	26.63	66KV-100%	100.00	37.00	66.00
BIJAPUR	1422.30	0.34	487066	0.45	25.00	100.00	100.00	64.23	70.21
TUMKUR	2606.40	0.62	940100	0.87	19.80	66KV-100%	100.00	20.00	40.00
BAGALKOT	1837.56	0.44	356285	0.33	22.37	100.00	100.00	72.85	72.87
CHIKKODI	1603.89	0.38	405834	0.37	25.47	100.00	100.00	74.73	77.25

Final Selection:

Considering all the above criteria, Chikkodi Circle was selected finally as the representative Circle under this Zone for further study.

9.2 AT& C LOSS ASSESSMENT METHODOLOGY :

9.2.1 METHODOLOGY FOR SITE SURVEY & COLLECTION OF DATA :

Methodology for collection of metered data for preparation of assessment report of Component-wise AT& C Losses was as follows:

1) Site visit at Circle & Divisions for preparation of 110/66/ 33 KV feeder interconnection diagram (showing all the concerned 110/ 11 kV & 33/ 11 kV Substations in the selected circle), showing 11 KV feeders emanating from each Substation of the circle and finally the 11 KV feeder diagrams for all the Substations (with marking of DTRs on them).

2) Metering status for each 33 kV feeder (at sending & receiving ends), 11 kV feeder (at the Substation source end) & DTR (at the LV side for both utility & bulk)for the selected Circle was obtained from the DISCOM and put in the above mentioned drawing for each circle.

3) Co-ordination with utility for collection of metering data from existing network of utility.

4) Collection of Meter data for all the 33 kV & 11 kV Feeders from selected Circle.

5) Collection of energy data for all the DTRs of 11 kV feeders for selected Circle (at the LV side).

6) Collection of energy data for LV Consumers of selected Circle.

7) Collection of following data from utility during the time period of meter reading being collected for each selected circle.

   a) Energy Billed (in MU),
   b) Revenue Billed (in Rs. Lakh)
   c) Revenue collected (in Rs. Lakh).

9.2.2 METHODOLOGY FOR COMPUTATION OF AT&C LOSSES OF THE FOUR REPRESENTATIVE CIRCLES OF KARNATAKA:

The overall energy loss has been computed from the actual meter reading by site survey of the meter installed at various locations in the system. Wherever meters were found defective, concerned DISCOM was informed for replacement of such meters with properly tested meters as per FOR guideline. In such cases, data was collected again at the end of the next billing cycle of the DISCOM. Average Energy Consumption was considered wherever replacement of Defective Meters could not be possible.

1) Meter data pertaining to sending end and receiving end of all the 33 KV feeders was tabulated and analyzed to derive the Technical loss figures of HV network (with due consideration of energy import/export points).

2) Technical loss figures of 11 kV systems had been determined as the difference between units input in the 11 kV system at the Power Substation end and units billed to 11 KV Bulk consumers plus units sent out to the LV system.

   The study was started with a "walk over" survey along with representative of utility for all 11 kV Feeders which were not subjected to illegal tapping of power. Subsequently, initial and final readings of the meters of the 11 kV feeders were recorded. The interval between initial and final meter readings was a period of one month of the concerned utility.

3) The losses occurring in the DTR was taken as 3% as per FOR guideline in absence of metering in the high voltage side of the DTR.

4) Technical losses in the LV system had been obtained by the difference of metered energy data at DTR secondary level and billed energy data of the customers connected to that DTR with strict supervision, in consultation with DISCOM official. In order to segregate the Commercial energy losses & that due to theft/pilferage, the elaborate procedure outlined in FOR document had been followed alongwith the DISCOM authorities. The sample feeders were selected (in consultation with the Nodal officer) on the basis of loading (lightly loaded/medium loaded/overloaded) and type of consumer (domestic & commercial/ Industrial/ Agricultural).

5) The **Draft Report** is the outcome of the detailed investigation. It contains the following particulars in detail:

a) Deliberation of the stratified sampling study regarding the zone demarcation of the concerned state and the subsequent selection of circles within the zones for the survey and study.

b) Overall 110/ 66/ 33 kV power interconnection diagrams of the selected circles (showing energy export & import points).

c) List of 11KV feeders with number of Distribution Transformers (DTRs) therein.

d) Listing of energy meter data for 33 kV feeders.

e) Listing of energy meter data for 11 kV feeders.

f) Listing of losses in 33 KV and 11 KV system,

g) Segregation of technical loss in the distribution, technical loss due to inaccurate metering, commercial loss due to billing deficiencies and that due to collection inefficiencies in the LV system.

h) Calculation of losses due to theft/pilferage in the LV system.

i) Overall assessment of energy loss figures showing the above heads and the final AT&C loss of the circle.

j) Extrapolation of results of each circle to the whole utility (Since the Circle is selected as a representative sample, the percentage losses for the entire DISCOM is presumed to be the same as the percentage losses calculated for the sample Circle) as well as the state as a whole .

9.2.3 METHODOLOGY FOR EXTRAPOLATION OF THE AT& C LOSS OF THE FOUR REPRESENTATIVE CIRCLES OF KARNATAKA:

Component-wise AT&C Loss for the State can be assessed by the methodology of Extrapolation based on Component-wise AT&C Loss for the four selected Circle of the State. Component-wise AT&C Loss for the four selected Circle was achieved based on the Metering & Commercial data collected from the field survey.

Sample Circle selection was carried out considering the different zones of various categories of loads like purely Urban, Semi-urban, Agricultural, Commercial & Industrial including Bulk loads etc. Component-wise AT&C Loss of the selected four circles was assessed as per methodology mentioned in this report earlier. Since component-wise AT&C Loss of four selected Circles was assessed considering different type of load pattern. Hence, assessed value of component-wise AT&C Losses of the selected four circles can represent entire range of component-wise losses of the State. Thus the assessment value considering average component-wise AT&C Loss of the selected four Circles is more-or-less accurate result of the State of Karnataka.

1. Percentage of AT&C Loss is the ratio of AT&C Loss with Input Energy. Hence it depends at what voltage level input energy is considered. As because selected circles are having 11 kV network and 11 kV line loss has been considered, percentage of AT&C loss must be considered at 11 kV voltage level i.e.; taking input energy at 11 kV voltage level.

2. 11kV line loss, LT line loss and all components of commercial losses as well as loss due to unrealized revenue should also be considered at 11 kV voltage level for component-wise assessment of AT&C Loss.

3. Average Input energy for the State may be found out in MU by simply averaging the four different input energies in MU of its four selected circles.

4. In the same way, Loss components of the four circles should be added for finding out their respective average values in MU.

5. Now the percentage of component-wise AT&C loss may be simply found out by taking percentage of each component with reference to the average input energy. This percentage values will give the extrapolated percentage value of different components of AT&C loss for the entire Karnataka State.

6. Sample circle selection was carried out considering different zones of various categories of loads like purely urban, semi-urban, agricultural, commercial and industrial including bulk loads etc. Component-wise AT&C losses of the selected four circles were assessed as per methodology mentioned in this report earlier.

7. Since component-wise AT&C losses for four selected circles were assessed considering different types of load pattern, assessed value of component-wise AT&C losses of the selected four circles can represent entire range of Component-wise Losses of the State Karnataka.

9.3 Workshop on Draft Report

A **workshop** was arranged on 12.02.2014 in the office of Forum of Regulators (FOR) for deliberating on the draft report. Methodology adopted for the study was deliberated in detail in the workshop. Comments from the CERC, PFC & Power Utilities on the draft report were recorded for incorporation in the final report.

9.4 Final Study Report

The **Final Study report** was prepared incorporating all the necessary comments and remarks suggested by PFC, CERC and Power Utilities of Madhya Pradesh during workshop.

10. PARTICIPATION OF THE UTILITIES & INTERVENTION OF THE F.O.R.

Since huge volumes of data had to be collected from the DISCOMS within a short span of time, for the correct assessment and segregation of losses of the system. Without their (DESCOM) cooperation or contribution, consultant could not generate such fruitful study report. In this connection, FOR Secretariat had extended their suggestion and shared their views for preparation of the report.

11. INTERCONNECTING POWER NETWORK :

33 kV Power Network means the single line diagram of all 33 kV lines connecting all Grid Sub-stations(GRID SUB-STATION) and 33/11 kV Primary Sub-stations. Once this power network diagram is made, it helps the power system engineers to study the load flow analysis of the entire system. LT network of any distribution system changes day by day as consumer load increases rapidly. Rapid load growth in the downstream network requires a proper matching with connected upstream network. Hence augmentation of conductors, Distribution Transformers, Power Transformers etc. are indispensable to meet the demand in the rapidly changing downstream network. Thus a clear view of interconnecting power network diagram helps in betterment and strengthening the power system of the State.

As four circles were selected for the entire state and based on these data extrapolation of loss assessment was done. The interconnecting 33 kV & 11 kV power network for these four circles, i.e; Bangalore South, Hubli, Gulbarga & Chikkodi Circles are given below in tabular form to have a overall idea for assessment of AT& C Loss.

11.1 POWER NETWORK OF BANGALORE SOUTH CIRCLE :

In Bangalore South circle there are nine (9) nos. of GRID SUB-STATION having 220/66 kV voltage ratio. From these nine (9) GRID SUB-STATION, 28 Nos. PRIMARY SUB-STATION are connected. 66 kV lines with the existing Grid Sub-station & Primary Sub-stations are depicted in the Power Network Diagram (Drg. No. MEC/19.56/Q707/BSC/ID/001). From this diagram one can get a clear picture about the emanating & destiny points of each 66 kV Feeder i.e; from which Grid Sub-station they originate & where they end. From this idea one can also know that to assess HT Loss, at what point meter reading should be taken.

In a similar way, 11 kV feeders are emanating from 66/ 11 kV Primary Sub-stations and are connected with several DTRs of different capacities. The details of all 11 kV feeders with their connected DTRs are given in Drg. No. MEC/19.56/Q707/BSC/ID/002, /003 & /004.

In a nutshell, there are **28** nos. Primary Sub-stations from 3 Divisions having total 81 nos. Power Transformers of **1646.5** MVA capacity (2 x 8 MVA+ 4 x 12.5 MVA + 68 x 20 MVA + 7 x 31.5 MVA). **441** nos. 11 kV outgoing feeders are emanating from these 28 nos. Primary Sub-stations and are connected with **10475** nos. of DTRs and Bulk DTRs having total capacity (including bulk capacity) of **2820** MVA. Hence total ca-

pacity of DTRs is **171.27%** of the installed capacity of the PTRs which may be extended up to 200% as per PFC guideline.

11.2 POWER NETWORK OF HUBLI CIRCLE :

In Hubli Circle there are six (6) nos. of GRID SUB-STATION among which one (1) is having 220/110/33 kV, three (3) having 220/110 kV and rest of the two (2) are having 110/33 kV voltage ratio. From these six (6) GRID SUB-STATION, 51 nos. Primary Sub-stations and 10 nos. Bulk loads are connected. 110 & 33 kV lines with the existing GRID SUB-STATION & Primary Sub-stations are depicted in the Power Network Diagram (Drg. No. MEC/19.56/Q707/HBL/ID/001). From this diagram one can get a clear picture about the emanating & destiny points of each 110 & 33 kV feeder i.e; from which GRID SUB-STATION or Primary Sub-stations they originate and where they end. From this idea one can also know that to assess HT Loss at what point meter reading should be taken.

In a similar way, 11 kV feeders are emanating from 110/ 11, 33/ 11 kV Primary Sub-stations and are connected with several DTRs of different capacities. The details of all 11 kV feeders with their connected DTRs are given in Drg. No. MEC/19.56/Q707/HBL/ ID/002, /003 & /004.

In a nutshell there are **51** nos. PRIMARY SUB-STATION from 3 Divisions having total **90** nos. Power Transformers of **875** MVA capacity (33 x 5 MVA+ 43 x 10 MVA + 14 x 20 MVA). **270** nos. 11 kV outgoing feeders are emanating from these 51 nos. PRIMARY SUB-STATION and are connected with **3550** nos. of DTRs and Bulk DTRs having total capacity (excluding bulk capacity) of **900.5** MVA. Hence total capacity of DTRs is **102.91%** of the installed capacity of the PTRs which may be extended up to 200% as per PFC guideline.

11.3 POWER NETWORK OF GULBARGA CIRCLE :

In Gulbarga Circle there are four (4) nos. of GRID SUB-STATION among which two (2) is having 220/ 110 kV and rest of the two (2) are having 220/110/33 kV voltage ratio. From these four (4) GRID SUB-STATION, 71 nos. PRIMARY SUB-STATION and 5 nos. Bulk loads are connected. 110 & 33 kV lines with the existing GRID SUB-STATION & PRIMARY SUB-STATION are depicted in the Power Network Diagram (Drg. No. MEC/19.56/Q707/GLB/ID/001). From this diagram one can get a clear picture about the emanating & destiny points of each 110 & 33 kV feeder i.e; from which GRID SUB-STATION or PRIMARY SUB-STATION they originate & where they end. From this idea one can also know that to assess HT Loss at what point meter reading should be taken.

In a similar way, 11 kV feeders are emanating from 110/11 kV & 33/11 kV PRIMARY SUB-STATION & are connected with several DTRs of different capacities. The details of all 11 kV feeders with their connected DTRs are given in Drg. No. MEC/19.56/Q707/GLB/ID/ 002, /003, /004 & /005.

In a nutshell there are **71** nos. PRIMARY SUB-STATION from 4 (for) Divisions having total **117** nos. Power Transformers of **850** MVA capacity (80 x 5 MVA+ 25 x 10 MVA + 10 x 20 MVA). **347** nos. 11 kV outgoing feeders are emanating from these 71 nos. PRIMARY SUB-STATION and are connected with **13157** nos. of DTRs and Bulk DTRs having total capacity (excluding bulk capacity) of **845.705** MVA. Hence total capacity of DTRs are **99.49%** of the installed capacity of the PTRs which may be extended upto 200% as per PFC guideline.

11.4 POWER NETWORK OF CHIKKODI CIRCLE :

In Chikkodi Circle there are eight (8) nos. of GRID SUB-STATION among which two (2) is having 110/ 33 kV and rest of the six (6) are having 220/ 110 kV voltage ratio. From these eight (8) GRID SUB-STATION, 50 nos. PRIMARY SUB-STATION are connected. 110 & 33 kV lines with the existing GRID SUB-STATION & PRIMARY SUB-STATION are depicted in the Power Network Diagram (Drg. No. MEC/19.56/Q707/ CKD/ID/001). From this diagram one can get a clear picture about the emanating & destiny points of each 110 & 33 kV feeder i.e; from which GRID SUB-STATION or PRIMARY SUB-STATION they originate & where they end. From this idea one can also know that to assess HT Loss at what point meter reading should be taken.

In a similar way, 11 kV feeders are emanating from 110/11 kV, 33/11 kV PRIMARY SUB-STATION & are connected with several DTRs of different capacities. The details of all 11 kV feeders with their connected DTRs are given in Drg. No. MEC/19.56/Q707/ CKD/ID/002, /003 & /004.

In a nutshell there are **31** nos. PRIMARY SUB-STATION from 3 divisions having total **99** nos. Power Transformers of **880** MVA capacity (56 x 5 MVA+ 26 x 10 MVA + 17 x 20 MVA). **345** nos. 11 kV outgoing feeders are emanating from these 31 nos. PRIMARY SUB-STATION and are connected with **17743** nos. of DTRs having total capacity (excluding bulk capacity) of **1071.** MVA. Hence total capacity of DTRs is **121.71%** of the installed capacity of the PTRs which may be extended up to 200% as per PFC guideline.

SUMMARY OF POWER TRANSFORMER & DISTRIBUTION TRANSFORMER

Sl. No.	Name of the Circle	Vol-tage Level (kV)	No. of Power Transformer						PTR Capacity in MVA	Distribution Transfor-mer (Nos.)	Total DTR Capacity in MVA (excluding Bulk)
			5 MVA	8 MVA	10 MVA	12.5 MVA	20 MVA	31.5 MVA			
1.	Bangalore South	66/11	-	2	-	4	68	7	1646.5	10475	2820.00
2.	Hubli	110/11 33/11	33	-	43	-	14	-	875.0	3550	900.50
3.	Gulbarga	110/11 33/11	80	-	25	-	10	-	850.0	13157	845.71
4.	Chikkodi	110/11 33/11	56	-	26	-	17	-	880.0	17743	1071.00
Total			**169**	**2**	**94**	**4**	**109**	**7**	**4251.5**	**44925**	**5637 .21**

12. COMPUTATION OF COMPONENT-WISE AT& C LOSS:

Aggregate Technical & Commercial Loss (AT&C) may be computed from the actual meter readings of the meter installed at various locations in the system. Computation of AT&C Loss involves estimation of Technical and Commercial Loss of the 4 distribution selected Circle of Karnataka.

Partial Load of distribution Network of Hubli, Gulbarga & Chikkodi Circle cater to 33 kV & partial 11 kV Level. Entire load of distribution network of Bangalore south circle cater to 11 kV Level. Hence, computation of AT&C Loss is in respect of 11 kV systems.

12.1 COMPUTATION OF 33 kV LOSS:

33 kV System Loss has been estimated as the difference of sending end energy from the 220 / 132 / 110 / 33 kV GRID SUB-STATION and receiving end energy of PRIMARY SUB-STATION including energy send out to Bulk consumers at 33 kV level.

33 kV Loss has been computed considering one month consumption by taking meter reading of all the incoming 33 kV feeder of PRIMARY SUB-STATION including bulk consumer and related 33 kV outgoing feeders of GRID SUB-STATION.

Thus the total 33 kV loss for this circle found out as

33 kV line loss = ∑(33 kV O/G Feeder meter reading at GRID SUB-STATION - ∑(33 kV I/C meter reading at PRIMARY SUB-STATION + 33 kV I/C meter reading at HT Bulk))

33 kV LOSS FOR FOUR SELECTED CIRCLES IN KARNATAKA : *(For details refer to Vol-II)*							
Sl No.	Name of the Circles	Starting Point	Energy consumption at 33KV outgoing meter at source end during interval in LU	Destination Point	Energy consumption at destination end during interval in LU	33 KV Line Loss	% of 33KV loss w.r.t. Input Energy
1	Bangalore South	33 kV O/G Feeder Meter points at GRID SUB-STATION	NA	33 kV I/C Feeder Meter points at 110/33 kV Sub-station & 33/11 kV PRIMARY SUB-STATION	NA	NA	NA
2	Hubli		535.290		523.794	11.496	2.148
3	Gulbarga		285.875		279.832	6.043	2.11
4	Chikkodi		531.05		510.759	20.291	3.821
Average of the four selected circles			1352.215		1314.385	37.83	2.797

12.2 COMPUTATION OF 11 kV LOSS:

Energy Loss of 11 kV feeders has been arrived at by the difference between the sending end energy i.e. 11 kV outgoing feeders of PRIMARY SUB-STATION and Energy recorded at LV side of DTR including Bulk consumer connected in the same feeder.

11 kV Loss has been computed considering one month energy consumption by taking meter reading of 11 kV feeder of PRIMARY SUB-STATION and all the DTR meter reading connected in the same 11 kV feeder.

Thus the total 11 kV loss for this circles found out as

11 kV line loss = ∑(11 kV O/G Feeder meter reading at PRIMARY SUB-STATION - ∑All DTRs' meter reading connected to that 11 kV feeder)

All 11 kV feeder meter reading have been taken for each selected circle and 11 kV losses for each circle has been computed accordingly. Detailed computations are mentioned in Vol-II.

11 kV LOSS FOR FOUR SELECTED CIRCLES IN KARNATAKA *(For details refer to Vol-II)*							
Sl. No.	Name of Circles	Starting Point	Energy consumption at 11KV outgoing meter at source end during interval in LU (X)	Destination Point	DTR Energy consumption at destination end during interval in LU (Y)	11 KV Line loss (LU) (X-Y)	% of 11KV loss w.r.t. Input Energy
1	Bangalore South	11 kV O/G Feeder meter reading points at PRIMARY SUB-STATION	4239.0	All DTRs' meter reading points connected to that 11 kV feeder	4036.44	202.56	4.778
2	Hubli		1138.094		1071.722	66.372	5.83
3	Gulbarga		1233.05		1170.15	62.90	5.101
4	Chikkodi		1164.28		1103.051	61.229	5.259
TOTAL			**7774.424**		**7227.249**	**393.061**	**5.056**

12.3 COMPUTATION OF LT LOSS:

Energy Loss of LT feeders have been arrived at by the difference between the sending end energy i.e. Distribution Transformer (DTR) and Energy recorded at consumer meters of LT consumers connected in the same DTR.

LT Loss of sample feeder has been computed considering one month energy consumption by taking meter reading of DTR and the entire Consumers' meter reading connected to the same DTR.

Thus the total LT line loss for these circles is found out as

LT line loss = ∑ (11/0.44 KV DTR meter reading - ∑All consumers' meter reading connected to that DTR)

DTR Meter reading of sample LT Feeders have been taken from each selected Circle and LT Line Loss for each circle has been computed accordingly. Total LT line loss of the Circle can be achieved by multiplying the total DTR consumption of the Circle and computed percentage loss of sample LT Feeders.

Total DTR consumptions of the circle may be found out as

= 11 kV Input Energy (at 11 kV O/G points at PRIMARY SUB-STATION) of the circle – Total 11 kV loss (which was already computed) of the circle.

Hence, if we just simply equate surveyed DTR consumption with the total circle DTR consumption, total LT line loss would be found out accordingly. Now for each circle the total DTR consumptions are given below :

LT LOSS FOR FOUR SELECTED CIRCLES IN KARNATAKA :
(For details refer to Vol-II)

Sl.no	Name of Circles	Starting Point	DTR consumptions of the circle (LU)	Destination Point	LT Line loss for the entire circle matched with the respective DTR consumptions (LU)	LT Line loss (%) w.r.t Input Energy
1	Bangalore	11/0.44 kV DTR meter reading points	4036.441	All consumers' meter reading points connected to that DTR	233.380	5.506
2	Hubli		1071.722		108.146	9.502
3	Gulbarga		1170.15		107.08	8.664
4	Chikkodi		1103.05		67.818	5.825
TOTAL			**7381.363**		**516.424**	**6.642**

12.4 COMPUTATION OF COMMERCIAL LOSS:

Commercial Loss may be found out as

= {AT&C Loss} – (Technical Loss)

= {(1 – Billing Efficiency x Collection Efficiency) x 100} – (11 kV Line Loss + LT Line Loss)

Now, in the above equation Billing, Collection Efficiency, Energy Billed and Energy collected have been received from the commercial data of the concerned utility.

Technical Loss i.e.; 33 kV, 11 kV and LT Line Losses have already been computed. Hence Total amount of Commercial Loss has been arrived by deducting all other components from AT&C Loss.

Commercial Loss comprises of the following components:

(a) Energy loss due to theft/ pilferage

During Field Survey it was observed that there is some energy lost due to theft/ pilferage in the Power system. It can be prevent by periodically checking.

(b) Defective meters

Considerable percentage of defective meters is one of the reasons for provisional billing and consequential commercial losses in the circles. Some energy meters installed at the consumer premises are found to be defective.

In other cases, it was found that the consumers deliberately conceal the information regarding defective meters. With the assistance of the local linemen/meter reader, the consumer takes the benefit of provisional billings, resulting in commercial loss.

CIRCLE-WISE DTR COMMERCIAL LOSS OF KARNATAKA							
Sl No.	Name of Circles	Loss due to theft / Pilferage		Loss due to Defective meters		Loss due to Unmetered Average billing consumer	
		LU	(%) w.r.t Input Energy	LU	(%) w.r.t Input Energy	LU	(%) w.r.t input Energy
1	Bangalore South	85.0	2.006	2.0	0.046	0.10	0.002
2	Hubli	92.68	8.143	0.57	0.050	35.26	3.098
3	Gulbarga	68.17	5.528	1.59	0.129	74.86	6.071
4	Chikkodi	87.39	7.506	0.67	0.058	45.12	3.875
TOTAL		**333.24**	**4.28**	**4.83**	**0.062**	**155.34**	**1.998**

12.5 COMPUTATION OF LOSS DUE TO UNREALIZED REVENUE:

Unrealized revenue is the revenue which is not realized due to non-payment by the consumers. Hence Energy loss due to unrealized revenue is the amount of energy loss converted from equivalent revenue loss.

Hence the total loss due to unrealized revenue of each circle found out as
Loss due to Unrealized Revenue= ∑ (Energy Billed – Collections in MU)

In a nutshell the final result of these detailed computations regarding loss due to unrealized revenue done in Vol-II (and also shown in the annexure in Vol-I) are given here for better understanding.

CIRCLE-WISE LOSS DUE TO UNREALIZED REVENUE OF KARNATAKA					
Sl No.	Name of Circles	Energy Billed (MU)	Energy Collected (MU)	Loss due to Unrealized Revenue (MU)	(%)Loss due to Unrealized Revenue (MU) w.r.t Input Energy
1	Bangalore South	371.60	359.91	11.69	2.758
2	Hubli	83.51	83.24	0.27	0.233
3	Gulbarga	91.85	84.17	7.68	6.224
4	Chikkodi	90.20	87.37	2.83	2.428
TOTAL		**637.16**	**614.69**	**22.47**	**2.888**

SUMMARY OF COMPONENT-WISE AT&C LOSS FOR KARNATAKA STATE FOR THE MONTH OF JULY 2013

Sl. No.	Particulars	Unit	Bangalore South	Hubli	Gulbarga	Chikkodi	Total	Description
1	Energy Input	MU	423.90	113.809	123.305	116.428	**777.442**	11 kV Level
2	Metered Energy Sales	MU	371.60	83.507	91.845	90.204	**637.156**	
3	Energy Billed	MU	371.60	83.507	91.845	90.204	**637.156**	
4	Energy Loss in MU	MU	52.30	30.303	31.460	26.223	**140.286**	
5	Revenue Billed	Rs. lac	25666.60	4335.930	5327.888	4271.626	**39602.04**	
6	Revenue Collected	Rs. lac	24859.08	4322.181	4882.705	4137.756	**38201.72**	Against Billed Amount
7	Billing Efficiency	%	87.66	73.374	74.486	77.477	**81.96**	Metered Energy in MU / Total energy in MU
8	Collection Efficiency	%	96.85	99.683	91.644	96.866	**96.46**	Revenue collected in Rs. Lakh / Revenue billed in Rs. Lakh
9	**% of AT&C Losses**	**%**	**15.096**	**26.858**	**31.737**	**24.951**		**[1-(Billing Efficiency x Collection Efficiency)] x100**
10	AT&C Loss	MU	63.99	30.567	39.134	29.050	**162.741**	[Energy Loss (MU) + Unrealized Revenue MU)] or (Input Energy x AT&C Loss as w.r.t. Input Energy)
11	Unrealized Revenue	MU	11.69	0.265	7.674	2.827	**22.456**	AT&C Loss in MU - Energy Loss in MU
12	% of Unrealized Revenue w.r.t. input energy	%	2.758	0.233	6.224	2.428	**2.888**	
13	11 kV line loss	MU	20.26	6.64	6.290	6.12	**39.31**	

Sl. No.	Particulars	Unit	Bangalore (South)	Hubli	Gulbarga	Chikkodi	Total	Description
14	% 11 kV line loss w.r.t. input energy	%	4.778	5.83	5.101	5.259	**5.056**	
15	LT Line Loss	MU	23.34	10.81	10.708	6.78	**51.638**	
16	% LT Line Loss w.r.t. input energy	%	5.506	9.502	8.664	5.825	**6.642**	
17	Commercial loss due to Defective meter	MU	0.20	0.057	0.159	0.067	**0.483**	
18	% Commercial loss due to Defective meter w.r.t. input energy	%	0.046	0.050	0.129	0.058	**0.062**	
19	Commercial loss due to Unmetered & others	MU	0.01	3.526	7.486	4.512	**15.534**	
20	% Commercial loss due to Unmetered & others w.r.t. input energy	%	0.002	3.098	6.071	3.875	**1.998**	
21	Commercial loss due to theft / pilferage	MU	8.50	9.268	6.817	8.739	**33.32**	Energy loss- 11 kV line loss - LT line loss- loss due to Unmetered & others - loss due to Defective meter
22	% of Commercial loss due to theft / pilferage w.r.t Input Energy	%	2.006	8.143	5.528	7.506	**4.28**	

13. EXTRAPOLATION OF COMPONENT-WISE AT&C LOSSES :

From the below table components of AT&C Loss are given for each of the four selected Circles of Karnataka i.e.; Bangalore South Circle, Hubli Circle, Gulbarga Circle and Chikkodi Circle.

Now computing the values of different components w.r.t total input energy of the entire state, we have got standard reference values of losses (component-wise) are shown in Row No. F.

Hence a standard percentage of components of AT&C losses can easily be found out w.r.t. the 11 kV Input Energy. These percentages of losses (component-wise) are shown in Row No. G

Sample circle selection was carried out considering different zones of various categories of loads like purely urban, semi-urban, agricultural, commercial and industrial including bulk loads etc. Component-wise AT&C losses of the selected four circles were assessed as per methodology mentioned in this report earlier. Since component-wise AT&C losses for four selected circles were assessed considering different types of load pattern, assessed value of component-wise AT&C losses of the selected four circles can represent entire range of component-wise losses of the State.

Thus the assessment values considering the average Component-wise AT&C Losses of the selected four Circles are more or less accurate result of the State of Karnataka.

EXTRAPOLATION OF ASSESSMENT OF COMPONENT-WISE AT&C LOSSES FOR THE STATE OF KARNATAKA											
Sl. No.	Name of the Circles	Formula	11 kV Input Energy (MU)	Technical Loss (MU)		Commercial Loss (MU)			Unrea-lized Rev-enue (MU)	Total Loss	(%) Loss
				11 kV	LT	Theft/ Pil-ferage	Defective Meters	Unmetered & Others			
1	2	3	4	5	6	7	8	9	10	11	12
A	Bangalore South	Computed Data	423.90	20.26	23.34	8.50	0.20	0.01	11.69	63.990	15.096
B	Hubli	Computed Data	113.809	6.64	10.81	9.268	0.057	3.526	0.265	30.567	26.853
C	Gulbarga	Computed Data	123.305	6.29	10.708	6.817	0.159	7.486	7.674	39.134	31.737
D	Chikkodi	Computed Data	116.428	6.12	6.78	8.739	0.067	4.512	2.827	29.050	24.951
E	Sub-Total (MU)	E = (A+B+C+D)	777.442	39.31	51.638	33.324	0.483	15.534	22.456	162.741	
F	Karnataka State (BESCOM+HESCOM +GESCOM+CESCOM+MESCOM)		3655.100	184.814	242.773	156.671	2.271	73.032	105.576	765.118	**20.935**
G	**Karnataka State (%) Loss**	w.r.t. Sl. No. (4)		**5.06**	**6.64**	**4.29**	**0.06**	**1.99**	**2.89**		**20.94**

PIE DIAGRAM OF COMPONENT-WISE AT&C LOSSES

FOR BANGALORE SOUTH CIRCLE

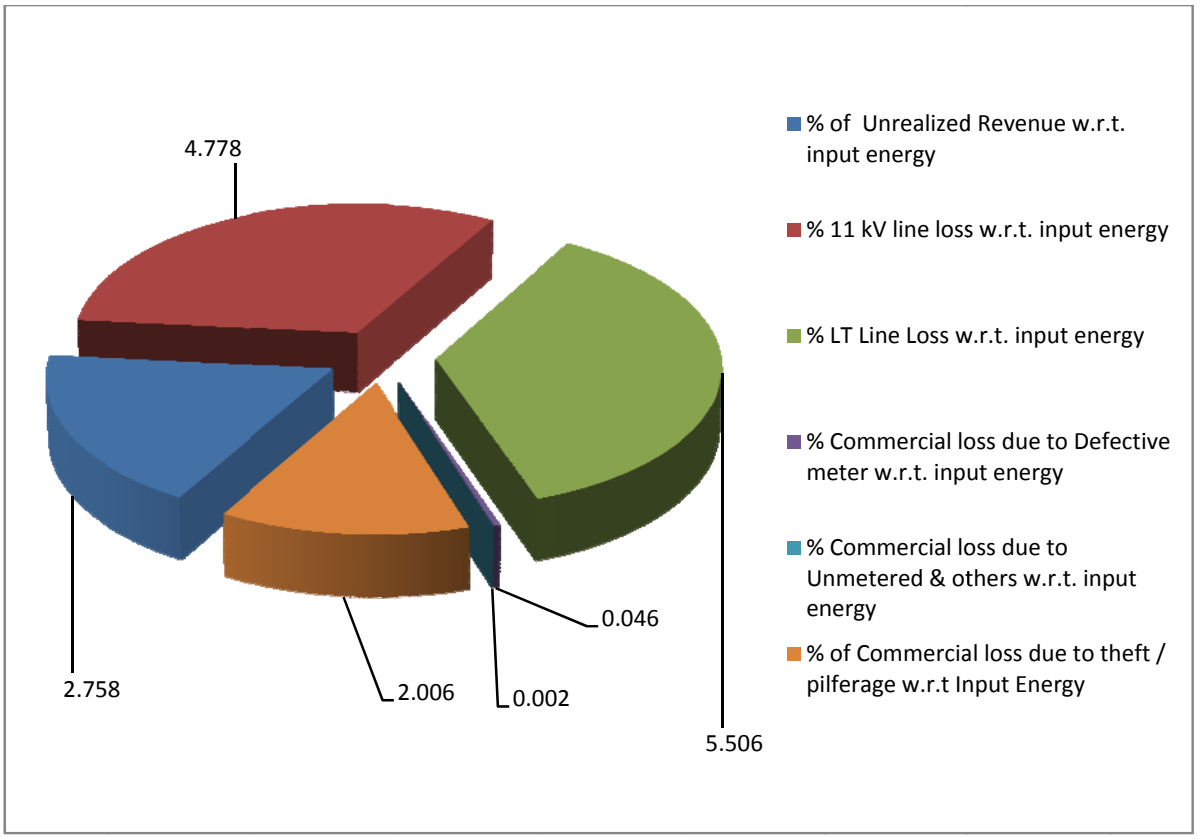

PIE DIAGRAM OF COMPONENT-WISE AT&C LOSSES

FOR HUBLI CIRCLE

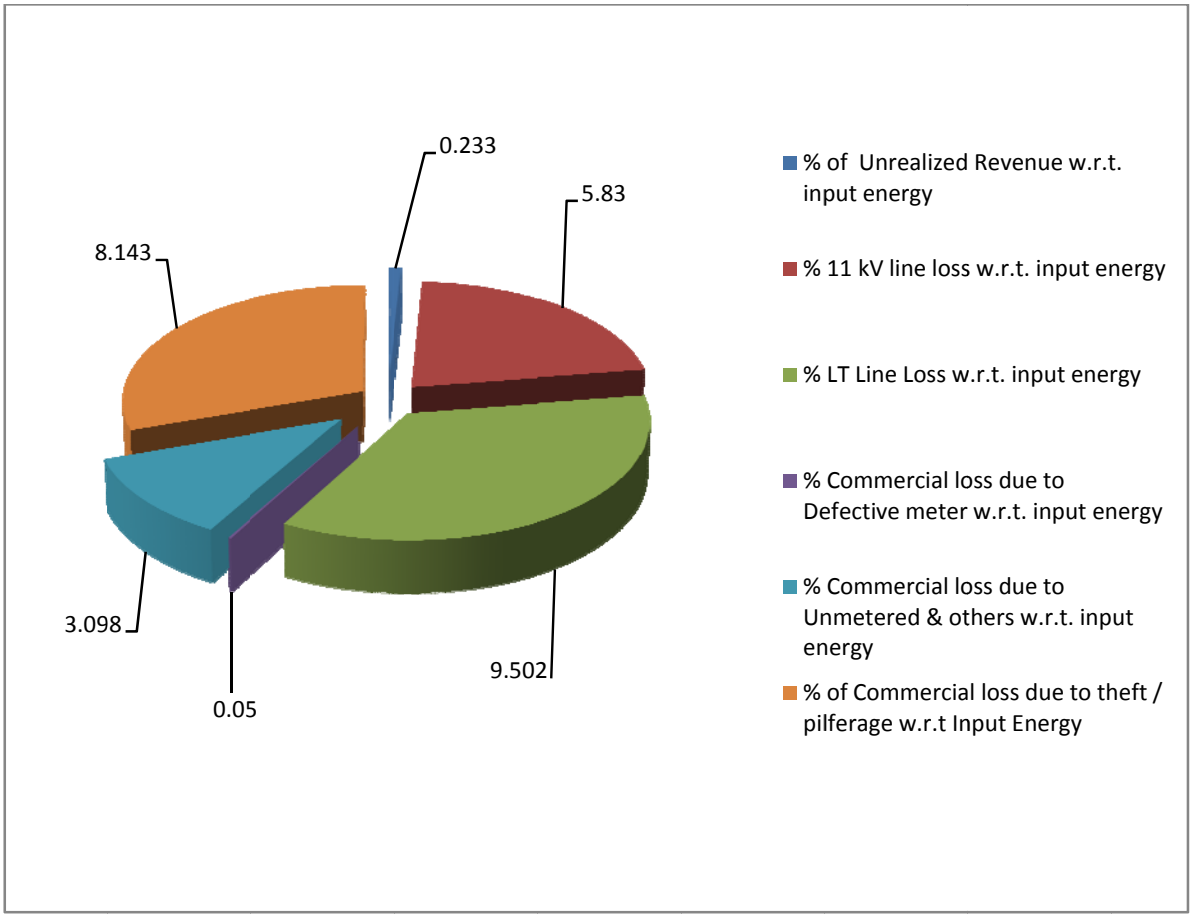

PIE DIAGRAM OF COMPONENT-WISE AT&C LOSSES

FOR GULBARGA CIRCLE

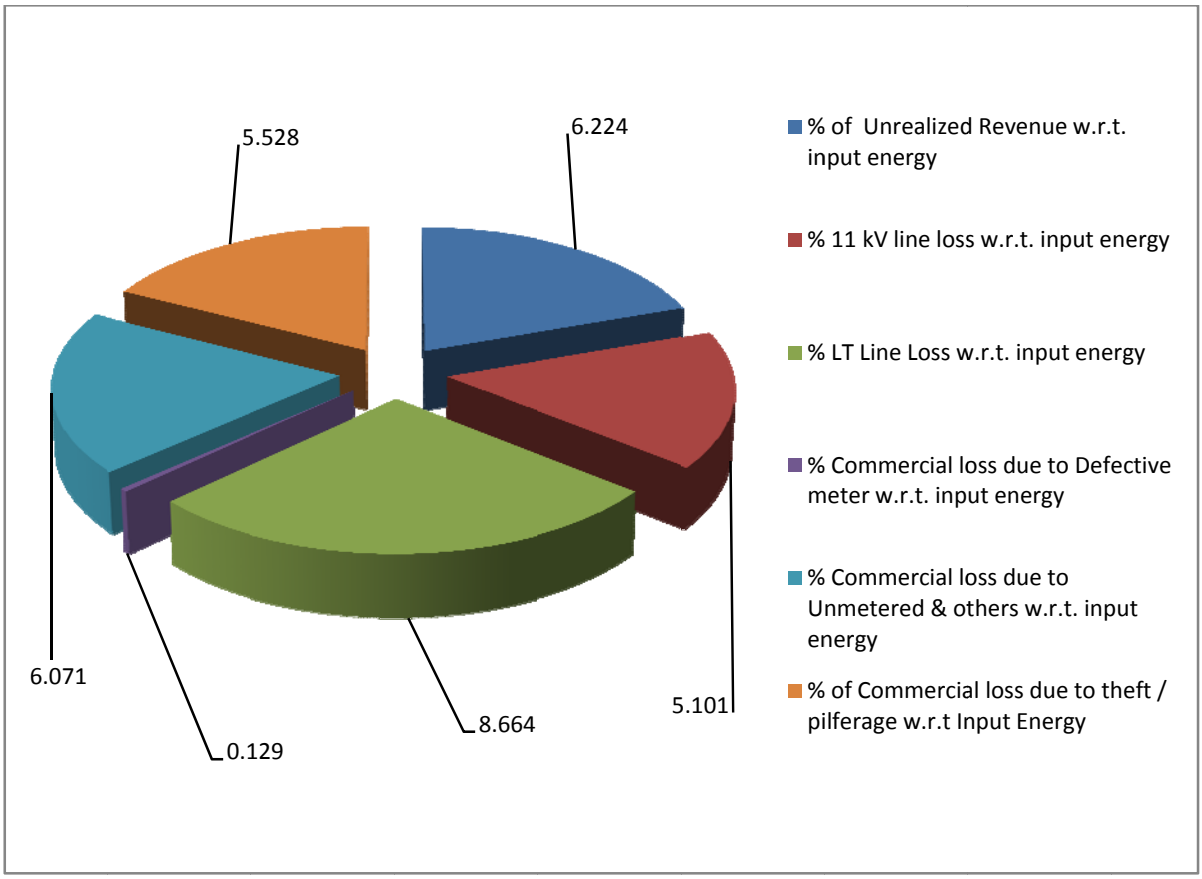

PIE DIAGRAM OF COMPONENT-WISE AT&C LOSSES

FOR CHIKKODI CIRCLE

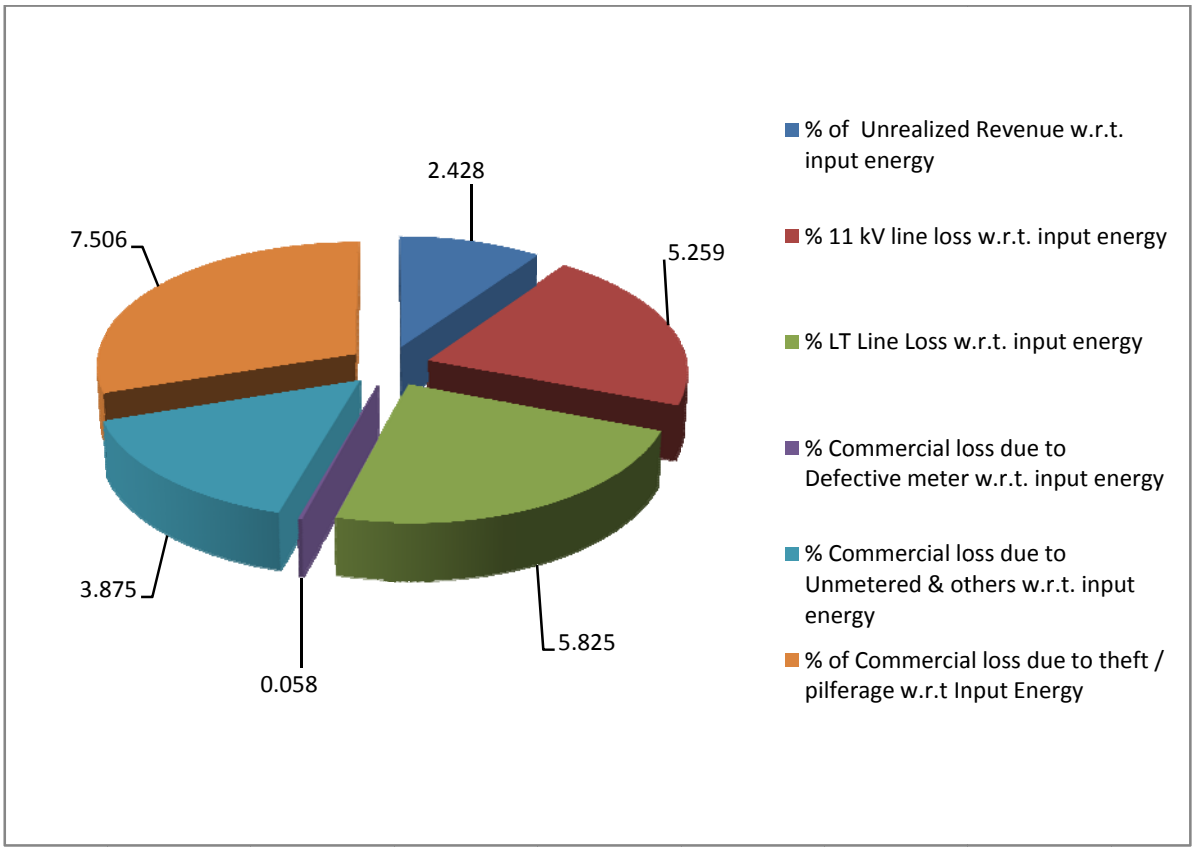

COMPONENT-WISE PERCENTAGE OF AT&C LOSS FOT THE STATE OF KARNATAKA

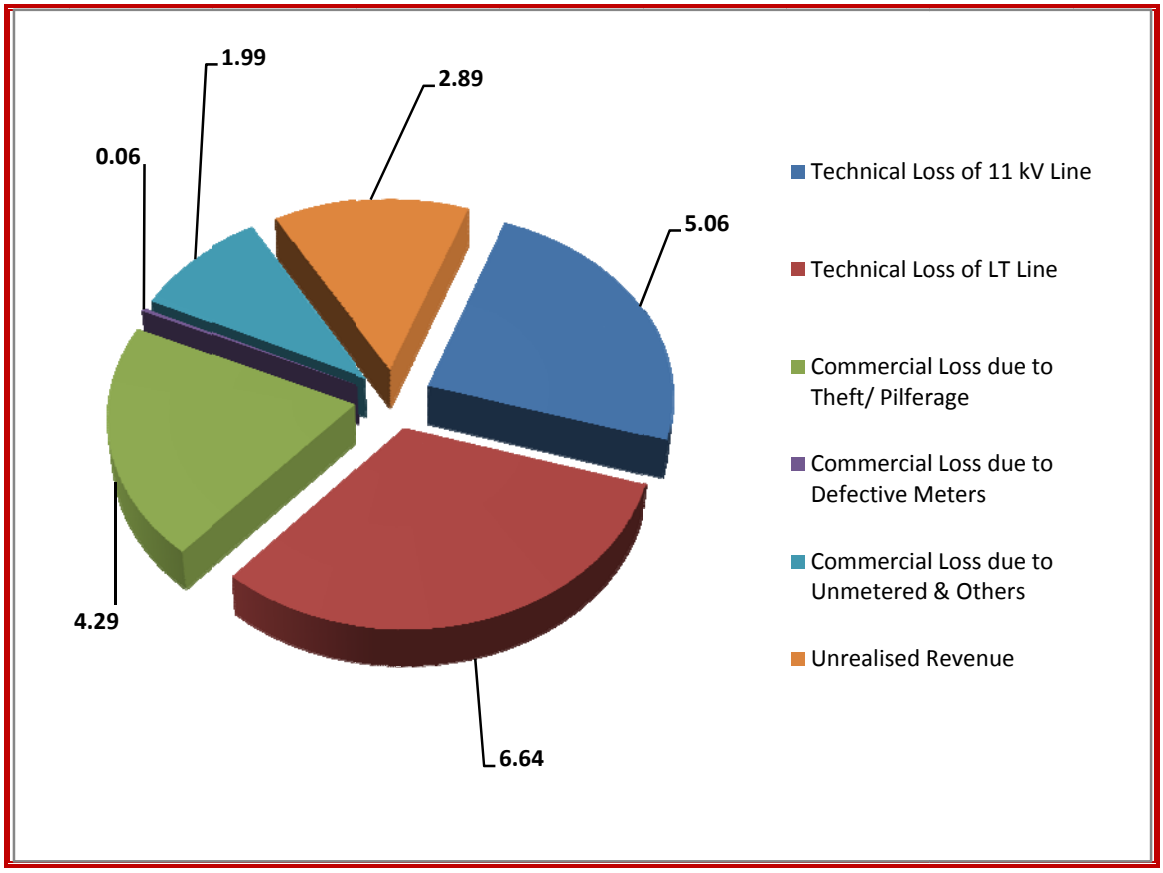

PERCENTAGE OF AT&C LOSSEES OF THE STATE KARNATAKA IS 20.94

14. CORRECTIVE MEASURE :

There are various considerations and corrective measures suggested to reduce the AT&C losses of the Distribution System. With the implementation of the following corrective measures the Distribution system can become healthy and a profit making centre :

a) LT Loss reduction can be achieved by considering HVDS and up gradation of existing network.

b) Theft and pilferage of energy of Distribution System can be reduced by introducing insulating conductors i.e.; Aerial Bunched conductor and increasing the regular vigilance activities.

c) Utility should conduct Energy Accounting & Audit to be carried out on regular basis for accurate measurement of the Component-wise AT&C Losses of the Distribution System.

d) Distribution Franchisee (DF) – High loss circles are to be franchised and DF will act as an intermediary between the Licensee and its consumer.

Thus methodology for reduction of AT & C Loss can be ascertained by approaching to each of its category to reduce them.

1. Technical Loss :

As Technical Loss is defined as the summation of 33 kV, 11 kV power Loss and LT power Loss, strategy should be taken separately for each case as follows:

New Substation, Renovation of Substation and Augmentation of capacity of Power Transformers:

When maximum load demand is found to be almost equal to the installed capacity of the connected substation, new power transformer or augmentation of it is proposed. But if there is space constraint in the switchyard, consultant should think of new substation at a suitable location/ load centre. Renovation of substation, use of underground cable in place of overhead bare line reduces the possibility of interruptions of the feeders. These implementa-

tions do not directly reduces the power loss, but improves the supply and reliability of the system.

33 kV Power Loss :

HT Power Loss occurs due to line loss.

Following steps should be taken to reduce it :

i) **Renovation of 33 kV Feeder Conductor :**
Older is the 33 kV conductor, poorer is the voltage regulation and more is the power loss because old conductor has more knots and joints. Renovation of 33 kV feeder conductors by new one having same size would improve voltage regulation as well as feeder loss.

ii) **Augmentation of 33 kV Feeder Conductor :**
Conductor having higher size has lower resistance i.e.; higher conductance. Thus by augmenting existing feeder conductor by higher sized conductor would definitely improve voltage regulation resulting reduction of 33 kV power losses.

iii) **Bifurcation/ Shifting of feeding point of 33 kV Feeder :**
Bifurcation of feeder reduces loss because total feeder length is reduced. Shifting of feeding points considering geographical feasibility would also reduces the power loss and increases the reliability of the system.

I. **11 kV power Loss :**

11 kV power losses occur due to heating effect of current flowing through conductor. That power loss is called i2R loss.

Following steps should be taken to reduce it :

i) **Installation of LT Capacitor:**
LT Capacitors at DTR secondary are considered to improve power factor which results improvement of voltage regulation and reduction of loss.

ii) **Renovation of 11 kV Feeder Conductor :**
11 kV old conductors has more knots and joints that increase the resistance of the conductor resulting voltage regulation and power

loss to be higher. Renovation of 11 kV feeder conductors by new one having same size would improve voltage regulation as well as feeder loss.

iii) **Augmentation of 11 kV Feeder Conductor :**

Conductor having higher size has lower resistance i.e.; higher conductance. Thus by augmenting existing feeder conductor by higher sized conductor would definitely improve voltage regulation resulting reduction of 11 kV power loss.

iv) **Bifurcation of 11 kV Feeder :**

In some cases where the existing feeder has higher length and heavy load, power loss is much consequentially. Higher length of feeder causes higher line resistance and higher loading draws much higher current. Thus I^2R Loss is higher. Both the factors can be controlled by bifurcation of the feeder proportionately and also considering geographic location so that newly generated feeders would have better voltage regulation. That reduces power loss.

II. <u>LT power Loss :</u>

LT power loss occurs due to line loss in LT lines. As voltage level is lower, current is higher compared to 11 kV line. This higher value of current causes higher line loss for LT. Following steps should be taken to reduce it :

i) **Installation of new DTR :**

Installation of new DTR does not directly reduce the loss. But this approach is related to the process. Actually new DTR is installed in the distribution network mainly for two reasons – firstly it is for the successive load growth of the town and secondly it is considered to prevent/ reduce the overloading of existing DTRs. Overloaded DTR trips frequently. Thus it results in frequent power interruption.

ii) **Shifting of existing DTR :**

Shifting of existing DTRs to the load centre results LT loss reduction due to reduction of LT Line length. Hence improvement of

HT : LT ratio is done. Thus High Voltage Distribution System (**HVDS**) is implemented.

iii) **Renovation of existing LT line :**
Renovation of existing LT lines by new line reduces LT power loss in a similar way as explained in case of 11 kV line renovation.

iv) **Augmentation of existing LT line :**
Augmentation of existing LT lines by higher sized LT Conductor/ Cable reduces LT power loss in a similar way as explained in case of 11 kV line augmentation.

v) **Phase conversion of LT Line :**
Conversion of LT line from single phase to three phase reduces the line current resulting the reduction of LT power loss.

2. **Commercial Loss :**

Commercial power loss mainly occurs due to theft/ pilferage of electrical power from LT network. To prevent this, following steps should be taken:

i) **Use of ABC for LT line :**
Aerial Bunched Conductor should be used for LT line. As it is an insulated conductor, theft/ pilferage can be prevented.

ii) **Replacement of damaged meters :**
Old/ damaged meters should be replaced by new meters having higher accuracy (preferably digital meters). Thus billing accuracy would be increased.

iii) **Prevention of tampering of meter :**
Heavy penalty should be introduced for tampering of meters. Tamper /pilfer proof meter boxes should be used.

iv) **Introduction of auditing :**
Regular energy audits for each 11 kV feeder and identification of high theft prone areas to intensify raids are to be introduced.

Power Loss due to unrealized revenue:

Following steps should be taken to reduce the power loss due to unrealized revenue:

i) **Increase of vigilance raids :**
Increase of vigilance raids should be introduced and thorough analysis of metered data should be done.

ii) **Improvement of billing and collection system :**
Improvement of billing and collection system by introduction of spot billing or outsourcing these activities should be done.

iii) **Introduction of mobile van :**
Introduction of mobile van with security for bill distribution and revenue collection should be taken into consideration.

15. CONCLUSION :

Major Components of AT&C Losses of Distribution System for the State of Karnataka are as follows :

a) Technical Loss components of Distribution System are Low Tension (LT) Line Losses.

b) Commercial Loss components of Distribution System are due to theft and pilferage of energy.

c) Seasonal variation of load should be considered for more accurate result for assessment of different components of AT& C Loss.

FOR FURTHER DETAILS, PLEASE CONTACT:

- **PRADIP ROY**
  GENERAL MANAGER
  MECON LIMITED
  50, Chowringhee Road, Kolkata - 700071
  Mob: +918902499968
  Fax No.: 033-22824441
  E-mail : kolkata@meconlimied.co.in, meconkol@gmail.com

- **ROBIN DAS**
  DEPUTY GENERAL MANAGER
  MECON LIMITED
  50, Chowringhee Road, Kolkata - 700071,
  Mob: +919433331937
  Fax No.: 033-22824441
  E-mail : kolkata@meconlimied.co.in, meconkol@gmail.com

MECON TEAM

REPORT APPROVED BY :

1. **SHRI PRADIP ROY,** GENERAL MANAGER, MECON, KOLKATA

REPORT CHECKED BY :

2. **SHRI ROBIN DAS,** DGM (ELEC.) & SIC, MECON, KOLKATA
3. **SHRI RAMESH IYER,** DGM (ELEC.), MECON, BANGALORE

REPORT PREPARED BY :

4. **SHRI NIKHILESWAR CHOWDHURY,** DESIGN ENGINEER, MECON, KOLKATA
5. **SHRI SHAHNAWAZ AHMAD,** DESIGN ENGINEER, MECON, RANCHI
6. **SHRI MUKESH KUMAR JAISWARA,** DESIGN ENGINEER, MECON, KOLKATA
7. **SHRI MOINAK SARKAR,** ASST. PROJECT ENGINEER, MECON, KOLKATA

KARNATAKA STATE AT A GLANCE

COMPONENT-WISE AT&C LOSS								
NAME OF THE CIRCLE/ STATE	11 kV INPUT ENERGY (MU)	% OF TECHNICAL LOSS DUE TO		% OF COMMERCIAL LOSS DUE TO				% OF AT&C LOSS
		11 kV LINE	LT LINE	PILFERAGE/ THEFT	DEFECTIVE METERS	UNMETERED/ AVERAGE BILLING	UNREALIZED REVENUE	
	(a)	(b)	(c)	(d)	(e)	(f)	(g)	
BANGALORE SOUTH	423.900	4.778	5.506	2.006	0.046	0.002	2.758	15.096
HUBLI	113.809	5.83	9.502	8.143	0.050	3.098	0.233	26.858
GULBERGA	123.305	5.101	8.664	5.528	0.129	6.071	6.224	31.737
CHIKODI	116.428	5.259	5.825	7.506	0.058	3.875	2.428	24.951
KARNATAKA STATE	**3655.100**	**5.060**	**6.640**	**4.290**	**0.060**	**1.990**	**2.890**	**20.940**

PIE DIAGRAM FOR % OF COMPONENT WISE AT&C LOSSES

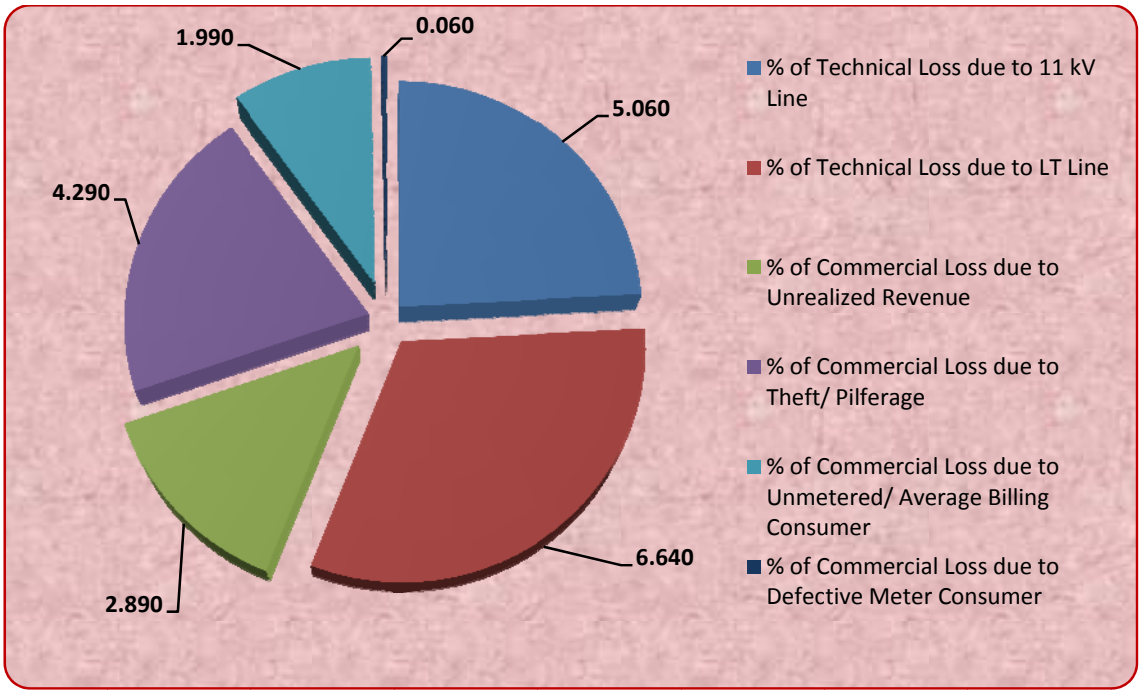

Percentage of AT&C Losses of Karnataka State is 20.94

COMPUTATION DETAILS
ON
ASSESSMENT OF COMPONENT-WISE AT&C LOSSES FOR KARNATAKA STATE

VOLUME-II

REPORT BY

MECON LIMITED

(A Govt. of India Enterprise)

MARCH 2014

C O N T E N T S

1. **33 kV LINE LOSS ASSESSMENT**
   a) Hubli Circle
   b) Gulberga Circle
   c) Chikkodi Circle

2. **11 kV FEEDER DETAILS WITH DTR**
   a) Bangalore South Circle
   b) Hubli Circle
   c) Gulberga Circle
   d) Chikkodi Circle

3. **11 kV LINE LOSS ASSESSMENT**
   a) Bangalore South Circle
   b) Hubli Circle
   c) Gulberga Circle
   d) Chikkodi Circle

4. **LT LINE LOSS ASSESSMENT**
   a) Bangalore South Circle
   b) Hubli Circle
   c) Gulberga Circle
   d) Chikkodi Circle

5. **LT WITH COMMERCIAL LOSS ASSESSMENT**
   a) Bangalore South Circle
   b) Hubli Circle
   c) Gulberga Circle
   d) Chikkodi Circle

6. **COMMERCIAL LOSS DUE TO DEFECTIVE METER**
   a) Bangalore South Circle
   b) Hubli Circle
   c) Gulberga Circle
   d) Chikkodi Circle

7. **COMMERCIAL LOSS DUE TO UNMETERED BILLING**
   a) Bangalore South Circle
   b) Hubli Circle
   c) Gulberga Circle
   d) Chikkodi Circle

8. **BILLING & COLLECTION OF DATA**
   a) Bangalore South Circle
   b) Hubli Circle
   c) Gulberga Circle
   d) Chikkodi Circle

9. **COMPONENT-WISE AT&C LOSS**
   a) Bangalore South Circle
   b) Hubli Circle
   c) Gulberga Circle
   d) Chikkodi Circle

33 kV LINE LOSS ASSESSMENT
OF
HUBLI CIRCLE
IN
KARNATAKA STATE

STUDY ON COMPONENT-WISE AT&C LOSSES ASSESSMENT FOR THE STATE OF KARNATAKA

B. 33 kV FEEDERS METER READING & 33 kV LINE LOSS DETAIL OF HUBLI CIRCLE

Sl. No.	Name of GSS/PSS	Voltage Level	Name Out going 33 KV feeder/ 33 KV Bulk	Interval of Reading	A	B	C=A-B	Destination 33/ 11 kV Sub-station Name (PSS)/ 33 kV Bulk	D	E	F=D-E	C-F	% of 33 kV Loss w.r.t. Input Energy
					Initial Meter Reading at 33 kV side of GSS (I1)	Final Meter Reading at 33 kV side of GSS (F1)	Energy consumption at 33KV outgoing meter at source end during interval in LU x=(F1-I1)		Initial Meter Reading at 33 kV side of PSS (I2)	Final Meter Reading at 33 kV side of PSS (F2)	Energy consumption at destination end during interval in LU. Y=(F2-I2)	33 kV Line Loss (x-∑y)	
GADAG DIVISION													
1	MUNDARAGI	110/33 kV	SHINGATALUR 1	1 Month	754.128	772.311	18.183	SHINGATALUR	1478.765	1494.363	15.598	0.5303	2.916
2								33 kV Korlahalli W/S (33 kV)	317.6042	319.6589	2.0547		
3	BADAMI	110/33 kV	HOLEALUR 1	1 Month	94.368	128.413	34.045	HOLEALUR	33.115	66.251	33.136	0.909	2.670
4	GADAG	110/33 kV	HULAKOTI 1	1 Month	695.964	706.942	10.978	HULAKOTI	2641.392	2652.131	10.739	0.239	2.177
5			LAKKUNDI 1	1 Month	474.336	478.131	3.795	LAKKUNDI	1874.331	1878.043	3.712	0.083	2.187
6	BHELLATTI	110/33 kV	HOLEITAGI 1	1 Month	930.772	941.571	10.799	HOLEITAGI	5346.35	5356.896	10.546	0.253	2.343
7			SURANAGI 1	1 Month	319.947	322.214	2.267	SURANAGI	10265.311	10267.54	2.229	0.038	1.676
8	RON	110/33 kV	MUSHIGERI 1	1 Month	1392.76	1412.701	19.941	MUSHIGERI	7265.274	7284.975	19.701	0.240	1.204
9	DAMBAL	110/33/11 kV	33 kV Dambal W/S	1 Month	317.214	319.947	2.733	33 kV Dambal W/S			2.698	0.035	1.281
TOTAL - GADAG DIVISION					**4979.489**	**5082.23**	**102.741**		**29222.142**	**29319.858**	**100.414**	**2.327**	**2.265**
DHARWAD DIVISION													
1	BELUR	110/33 kV	UAS DHARWAD 1	1 Month	5157.122	5188.211	31.089	UAS DHARWAD	6256.84	6287.15	30.31	0.779	2.506
2			UPPIN BETAGIRI 1	1 Month	91.851	179.452	87.601	UPPIN BETAGIRI	427.754	468.18	40.426	1.345	1.535
3								HT-74 (TATA marco), Line-1	223	231.98	8.98		
4								HT-24 (TATA marco), Line-2	268.31	275.97	7.66		
5								33KV DRHT-117	119.06	119.11	0.05		
6								DRHT-13, Southern ferrows	49.74	78.1	28.36		
7								HT-73 (RPA)	6.46	7.24	0.78		
8	KADANAKOPPA	110/33 kV	DUMMAWAD 1	1 Month	234.968	241.939	6.971	DUMMAWAD	2231.41	2238.24	6.83	0.141	2.023
9			NIGADI 1	1 Month	168.518	192.067	23.549	NIGADI	533.29	556.29	23	0.549	2.331
10	HALIYAL	110/33 kV	ALNAVAR 1	1 Month	824.602	864.361	39.759	ALNAVAR	3168.3	3207.21	38.91	0.849	2.135
11	LAKAMANAHALLI	110/33 kV	ARAVATIGI 1	1 Month	282.373	364.912	82.539	ARAVATIGI	597.89	635.3543	37.4643	2.1347	2.586
12								ABHT-1 (Amminbhavi W/s)	938.91	981.85	42.94		
TOTAL - DHARWAD DIVISION					**6759.434**	**7030.942**	**271.508**		**14820.964**	**15086.674**	**265.710**	**5.7977**	**2.135**

Sl. No.	Name of GSS/PSS	Voltage Level	Name Out going 33 KV feeder/ 33 KV Bulk	Interval of Reading	A	B	C=A-B	Destination 33/ 11 kV Sub-station Name (PSS)/ 33 kV Bulk	D	E	F=D-E	C-F	% of 33 kV Loss w.r.t. Input Energy
					Initial Meter Reading at 33 kV side of GSS (I1)	Final Meter Reading at 33 kV side of GSS (F1)	Energy consumption at 33KV outgoing meter at source end during interval in LU x=(F1-I1)		Initial Meter Reading at 33 kV side of PSS (I2)	Final Meter Reading at 33 kV side of PSS (F2)	Energy consumption at destination end during interval in LU. Y=(F2-I2)	33 kV Line Loss (x-∑y)	
HUBLI DIVISION													
1	GOPANAKOPPA	110/33 kV	KIMS 1	1 Month	509.715	535.876	26.161	KIMS	285.52	311.13	25.61	0.551	2.106
2			KUSAGAL ROAD 1	1 Month	503.773	529.491	25.718	KUSAGAL ROAD	3942.81	3967.96	25.15	0.568	2.209
3	SRS HUBLI	110/33 kV	INDUSTRIAL ESTATE HUBLI 1	1 Month	1585.808	1633.217	47.409	INDUSTRIAL ESTATE	8741.89	8788.32	46.43	0.979	2.065
4			KUNDAGOL 1	1 Month	1677.723	1701.231	23.508	KUNDAGOL	638.9	661.92	23.02	0.488	2.076
5			SAUNSHI 1	1 Month	765.731	803.976	38.245	SAUNSHI	1437.68	1475.14	37.46	0.785	2.053
TOTAL - HUBLI DIVISION					**5042.750**	**5203.791**	**161.041**		**15046.800**	**15204.470**	**157.670**	**3.371**	**2.093**
GRAND TOTAL (GADAG, DHARWAD, HUBLI DIVISION)					**16781.673**	**17316.963**	**535.290**		**59089.906**	**59611.002**	**523.794**	**11.496**	**2.148**
HUBLI CIRCLE 33 kV SIDE INPUT ENERGY IN LU					**535.290**	**Hubli Circle 33 kV Line Loss w.r.t. Total Input Energy (33 kV side)**						**11.496**	**2.148**

33 kV LINE LOSS ASSESSMENT
OF
GULBERGA CIRCLE
IN
KARNATAKA STATE

STUDY ON COMPONENT-WISE AT&C LOSSES ASSESSMENT FOR THE STATE OF KARNATAKA

A. 33 kV FEEDERS METERS READING & 33 KV LINE LOSS DETAIL OF GULBARGA CIRCLE

Sl. No.	Name of GSS/ PSS	Voltage Level	Name of Outgoing 33 kV Feeder/ 33 kV Bulk	Interval of Reading	A Initial meter reading at 33 KV side of GSS (I1)	B Final meter reading at 33 KV side of GSS (F1)	C=A-B Energy consumption at 33KV outgoing meter at source end during interval in LU x=(F1-I1)	Destination33/11 KV Sub-station Name (PSS)/33 KV Bulk	D Initial meter reading at 33 KV side of PSS (I2)	E Final meter reading at 33 KV side of PSS (F2)	F=D-E Energy consumption at destination end during interval in LU. Y=(F2-I2)	C-F 33 KV Line loss (x-∑y)
GULBARGA-I DIVISION												
1	Gulbarga West	110/33KV	33kV I/C line	1 Month	8765.500	8770.930	5.430	GUDDUR	251.632	256.942	5.310	0.120
2	Gulbarga (N)	110/33KV	33kV I/C line	1 Month	2752.500	2756.872	4.372	KADGANCHI	328.624	332.908	4.284	0.088
3	Gulbarga West	110/33KV	33kV I/C line	1 Month	1374.300	1379.463	5.163	GOBBUR	285.717	290.736	5.019	0.144
4	Gulbarga West	110/33KV		1 Month	5831.300	5837.435	6.135	HASARGUNDGHI			6.000	0.135
5	Gulbarga West	110/33KV	33kV I/C line	1 Month	548.120	571.784	23.664	Chowdapur			23.200	0.464
6	Karajagi	110/33KV	33kV I/C line	1 Month	3172.600	3179.458	6.858	UDCHAN	378.818	385.534	6.716	0.142
7	Karajagi	110/33KV	33kV I/C line	1 Month	1537.530	1543.972	6.442	MANNUR	109.590	115.902	6.312	0.130
8	Wadi	110/33KV	33kV I/C line	1 Month	2241.830	2243.403	1.573	REVOOR	48.256	49.798	1.542	0.031
9	Aland	110/33KV	33kV I/C line	1 Month	7549.210	7554.730	5.520	Madan Hipparga	273.280	278.670	5.390	0.130
10	Aland	110/33KV	33kV I/C line	1 Month	3874.350	3878.342	3.992	JIDGA	229.619	233.511	3.892	0.100
11	Aland	110/33KV	33kV I/C line	1 Month	3491.700	3500.010	8.310	SARSAMBA			8.100	0.210
12	Aland	110/33KV	33kV I/C line	1 Month	3765.600	3774.980	9.380	Khajuri			9.200	0.180
13	Gulbarga (N)	110/33KV	33kV I/C line	1 Month				JAMBAGA				
14	Mahagaon	110/33KV	33kV I/C line	1 Month	6495.400	6503.730	8.330	V.K SALGAR	454.976	463.126	8.150	0.180
15	Gulbarga (N)	110/33KV	33kV I/C line	1 Month	4385.700	4407.868	22.168	AZADPUR	556.084	577.732	21.648	0.520
16	Gulbarga West	110/33KV	33kV I/C line	1 Month	6593.100	6598.918	5.818	Hadgil Haruthi	598.494	604.172	5.678	0.140
17	Aland	110/33KV	33kV I/C line	1 Month	3972.400	3977.211	4.811	TADKAL			4.700	0.111
18	Madiyal	110/33KV	33kV I/C line	1 Month	8462.740	8469.271	6.531	NIMBARGA			6.400	0.131
GULBARGA -I DIVISION TOTAL							**134.497**				**131.541**	**2.956**
GULBARGA-II DIVISION												
1	110/33/11 kV Mandewal	110/33KV	33kV I/C line	1 Month	4261.710	4265.454	3.744	NELOGI	150.490	154.144	3.654	0.090
2	110/33/11 kV Jewargi	110/33KV	33kV I/C line	1 Month	1843.700	1849.736	6.036	BILWAR	381.346	387.232	5.886	0.150
3	110/33/11 kV Jewargi	110/33KV	33kV I/C line	1 Month	9128.200	9142.470	14.270	YADRAMI	833.583	847.548	13.965	0.305
4	110/33/11 kV Chittapur	110/33KV	33kV I/C line	1 Month	327.200	333.551	6.351	ALLOLI	202.895	209.116	6.221	0.130
5	110/33/11 kV Gulbarga West	110/33KV	33kV I/C line	1 Month	5863.420	5870.552	7.132	ANKALAGA	460.764	467.776	7.012	0.120
6	110/33/11 kV Chittapur	110/33KV	33kV I/C line	1 Month	4651.700	4656.320	4.620	KALAGI			4.500	0.120
7	110/33/11 KV Yadgir	110/33KV	33kV I/C line	1 Month	3187.600	3188.128	0.528	NALWAR	70.266	70.784	0.518	0.010
8	110/33/11 kV Chittapur	110/33KV	33kV I/C line	1 Month	838.700	841.942	3.242	HEBBAL	191.788	194.960	3.172	0.070
9	110/33/11 kV Chittapur	110/33KV	33kV I/C line	1 Month	649.120	653.190	4.070	GUNDGURTHI	123.420	127.407	3.987	0.083
GULBARGA -II DIVISION TOTAL							**49.993**				**48.915**	**1.078**

Sl. No.	Name of GSS/ PSS	Voltage Level	Name of Outgoing 33 kV Feeder/ 33 kV Bulk	Interval of Reading	Initial meter reading at 33 KV side of GSS (I1)	Final meter reading at 33 KV side of GSS (F1)	Energy consumption at 33KV outgoing meter at source end during interval in LU x=(F1-I1)	Destination33/11 KV Sub-station Name (PSS)/33 KV Bulk	Initial meter reading at 33 KV side of PSS (I2)	Final meter reading at 33 KV side of PSS (F2)	Energy consumption at destination end during interval in LU. Y=(F2-I2)	33 KV Line loss (x-∑y)
YADGIR DIVISION												
1	110/33/11 KV Yadgir	110/33KV	33kV I/C line	1 Month				HATTIKUNI				
2	220/110/33/11 kV Sedam	110/33KV	33kV I/C line	1 Month	5873.200	5878.178	4.978	GAJARKOT	636.072	640.940	4.868	0.110
3	110/33/11kV KONKAL	110/33KV	33kV I/C line	1 Month				GURMATKOL				
4	110/33/11 KV Yadgir	110/33KV	33kV I/C line	1 Month				JAIGRAM				
5	110/33/11 KV Yadgir	110/33KV	33kV I/C line	1 Month				BALICHAKRA				
6	110/33/11 KV Yadgir	110/33KV	33kV I/C line	1 Month	3927.200	3943.234	16.034	THANAGUNDI	341.908	357.612	15.704	0.330
7	110/33/ 11KV Shahapur	110/33KV	33kV I/C line	1 Month				WADGERA				
YADGIR DIVISION TOTAL							**21.012**				**20.572**	**0.440**
SEDEM DIVISION												
1	220/110/33/11 kV Sedam	110/33KV	33kV I/C line	1 Month	7631.210	7638.081	6.871	KODLA	439.685	446.436	6.751	0.120
2	110/33/11kV Chincholli	110/33KV	33kV I/C line	1 Month	2973.300	2984.684	11.384	SULEPETH	904.478	915.682	11.204	0.180
3	110/33/11kV Chincholli	110/33KV	33kV I/C line	1 Month	1936.700	1941.410	4.710	Konchavarm			4.600	0.110
4	110/33/11kV Chincholli	110/33KV	33kV I/C line	1 Month	6486.300	6505.520	19.220	Nidagunda	67.737	86.538	18.801	0.419
5	220/110/33/11 kV Sedam	110/33KV	33kV I/C line	1 Month	216.200	222.120	5.920	MUDHOL			5.800	0.120
6	110/33/11 kV Mahagaon	110/33KV	33kV I/C line	1 Month	7358.700	7366.880	8.180	RATKOL			8.000	0.180
7	110/33/11kV Chincholli	110/33KV	33kV I/C line	1 Month	9363.650	9373.396	9.746	MIRIYAN	352.536	362.162	9.626	0.120
8	110/33/11kV Chincholli	110/33KV	33kV I/C line	1 Month	4031.340	4041.282	9.942	Chimmanchod	506.916	516.638	9.722	0.220
9	110/33/11 kV Chittapur	110/33KV	33kV I/C line	1 Month	402.700	407.100	4.400	MULKHED			4.300	0.100
SEDEM DIVISION TOTAL							**80.373**				**78.804**	**1.569**
GULBARGA CIRCLE 33 kV SIDE INPUT ENERGY							**285.875**	**GULBARGA CIRCLE 33 kV SIDE LOSS**				**6.043**
GULBARGA CIRCLE 33 kV SIDE INPUT ENERGY (LU)							**285.875**	**GULBARGA CIRCLE 33 kV SIDE LOSS(%)**				**2.114**

33 kV LINE LOSS ASSESSMENT
OF
CHIKKODI CIRCLE
IN
KARNATAKA STATE

STUDY ON COMPONENT-WISE AT&C LOSSES ASSESSMENT FOR THE STATE OF KARNATAKA

A. 33 KV LINE LOSS ASSESSMENT DETAIL OF CHIKKODI CIRCLE

Sl. No.	Name of GSS/PSS	Voltage Level	Name of Outgoing 33 kV Feeder/ 33 kV Bulk	Interval of Reading	A	B	C=B-A	Destination 33/11 kV Sub-station Name (PSS)/ 33 kV Bulk	D	E	F=E-D	C-F	% of 33 kV Loss w.r.t Input Energy
					Initial Meter Reading at 33 kV side of GSS (LU)	Final Meter Reading at 33 kV side of GSS (LU)	Energy Consumption at 33 kV Outgoing Meter at Source end during Interval in LU		Initial Meter Reading at 33 kV side of PSS (LU)	Final Meter Reading at 33 kV side of PSS (LU)	Energy Consumption at Destination end during Interval in LU	33 kV Line Loss	
1	110 KV Chikkodi GSS	110/33KV	F1-Karoshi	1 Month	1542.70	1554.03	11.33	33/11 KV Karoshi PSS			11.04	0.29	2.54
2			33KV F1-Kerur Feeder	1 Month	214.05	216.69	2.64	33/11 KV Kerur PSS			2.52	0.12	4.57
3			F1-Kabbur+vijaynagar	1 Month	2980.02	2988.64	8.63	33/ 11 kV Muss Kabbur + Vijaynagar PSS			8.39	0.24	2.73
			Sub-Total -1				**22.59**				**21.95**	**0.64**	**2.85**
4	110 kKV Nipani GSS	110/33 KV	33 KV F1-Kadakalat	1 Month	261.39	272.44	11.06	33/11 KV Muss Kadakalat PSS			10.56	0.49	4.48
5			F1-Bennadi	1 Month	171.11	177.29	6.18	33/11 KV Muss Bennadi PSS			5.52	0.66	10.69
			Sub-Total -2				**17.24**				**16.08**	**1.16**	**6.70**
6	110KV Sadalaga	110/33 KV	33 KV F1-Kunnur Feeder	1 Month	2074.78	2078.96	4.18	33/11 KV Muss Kunnur PSS			3.80	0.38	9.00
7			33 KV F4-nanadi Feeder	1 Month	1697.05	1732.15	35.11	33/11 KV Muss Nandi PSS			33.34	1.77	5.04
			Sub-Total -3				**39.28**				**37.14**	**2.15**	**5.47**
8	110KV Galataga	110/33 KV	33KV Bhoj+33KV Feeder	1 Month	2162.37	2200.34	37.96	33/11 KV Muss Bhoj PSS			35.34	2.63	6.93
			Sub-Total -4				**37.96**				**35.34**	**2.63**	**6.93**
9	110KV Ankali GSS	110/33 KV	33KV Kothwadi+Shiraguppi Feeder	1 Month	748.93	793.59	44.66	33/11 KV Muss Kothwadi PSS			42.87	1.79	4.02
			Sub-Total -5				**44.66**				**42.87**	**1.79**	**4.02**
10	110KV Hidakal GSS	110/33 KV	33KV Koligudda Feeder	1 Month	**484.93**	**502.97**	18.04	33/11 KV Koligudda PSS			17.23	0.81	4.51
11			33KV Sultanpur Feeder	1 Month	**877.82**	**907.57**	29.75	33/11 KV Sultanpur PSS			28.62	1.13	3.80
12			33KV Alagawadi Feeder	1 Month	**437.15**	**459.38**	22.23	33/11 KV Alagawadi PSS			21.72	0.51	2.30
			Sub-Total -6				70.02				67.57	2.45	**3.51**
13	110kV Ankali	110/33 KV	33KV Nandikurali Feeder	1 Month	**1671.52**	**1678.13**	6.61	33/11 KVNandikurali PSS			6.55	0.06	0.92
			Sub-Total -7				6.61				6.55	0.06	**0.92**
14	110kV Kudachi	110/33 KV	33KV Yalparatti Feeder	1 Month	**5437.82**	**5469.08**	31.26	33/11 KV Yalparatti PSS			29.60	1.66	5.32
15			33KV Chichali Feeder	1 Month	**5070.83**	**5103.24**	32.41	33/11 KV Chichali PSS			31.24	1.17	3.62
			Sub-Total -8				63.67				60.84	2.84	**4.46**

Sl. No.	Name of GSS/PSS	Voltage Level	Name of Outgoing 33 kV Feeder/ 33 kV Bulk	Interval of Reading	A	B	C=B-A	Destination 33/11 kV Sub-station Name (PSS)/ 33 kV Bulk	D	E	F=E-D	C-F	% of 33 kV Loss w.r.t Input Energy
					Initial Meter Reading at 33 kV side of GSS (LU)	Final Meter Reading at 33 kV side of GSS (LU)	Energy Consumption at 33 kV Outgoing Meter at Source end during Interval in LU		Initial Meter Reading at 33 kV side of PSS (LU)	Final Meter Reading at 33 kV side of PSS (LU)	Energy Consumption at Destination end during Interval in LU	33 kV Line Loss	
16	110kV Ghataprabha	110/33 KV	33KV Chichali Feeder	1 Month	**3437.98**	**3488.52**	36.14	33/11 KV Chichali PSS			32.88	3.26	9.01
			Sub-Total -9				36.14				32.88	3.26	**9.01**
17	110/33/11 KV Athani	110/33 KV	Jambagi				16.07	33/11 KV MUSS JAMBAGI			15.87	0.20	1.24
18			Murgundi				10.07	33/11 Muragundi			9.95	0.12	1.16
19			Shirahatti+Nandgaon				54.31	33/11KV MUSS SHIRAHATTI			53.16	1.15	2.12
20			Halyal+Sankonatti				40.40	33/11 KV MUSS HALYAL			40.00	0.40	0.99
			Sub-Total -10				120.85						
21	110 KV MUSS Ugar	110/33 KV	Mangasuli				12.65	33 KV MUSS Mangasuli			12.57	0.08	0.64
22			Kagawad+Shedabal				19.59	33/11 KV SHEDBAL			19.54	0.05	0.24
			Sub-Total -11				32.23						
23	220/110/33 KV Athani	110/33 KV	Satti				5.64	110/33/11 KV MUSS Satti			5.56	0.08	1.43
			Sub-Total -12				5.64						
24	110 KV ANKALI	110/33 KV	Shiraguppi+Khothwadi				34.15	33/11 KV SHIRAGUPPI			32.91	1.23	3.61
			Sub total 13				**34.15**				**189.55**	**3.31**	**9.70**
		Grand Total (Sub-Total -1 to 13)					**531.05**				**510.76**	**20.29**	**3.82**
Chikkodi Circle 33 kV side Input Energy in LU							**531.05**	**Chikkodi Circle 33 kV Line Loss w.r.t. Total Input Energy (33 kV side)**				**20.29**	**3.82**

N.B.: ***Initial & Final Meter Reading values are multiplied with Meter Multiplication Factor (MF).***

11 kV FEEDERS DETAIL
WITH DTR CAPACITY
OF
BANGLORE SOUTH CIRCLE
IN
KARNATAKA STATE

STUDY ON COMPONENT-WISE AT&C LOSSES ASSESSMENT FOR THE STATE OF KARNATAKA

A. 11 kV FEEDERS DETAIL WITH DTR CAPACITY OF BANGALORE SOUTH CIRCLE

Sl. No.	Name of Division	Name of PSS	Name of Outgoing 11 kV Feeder	A	B	C=B-A	DISTRIBUTION TRANSFORMER DETAIL IN NOS.																		No. of HT Bulk	Total DTR Capacity in kVA (incl. Bulk)
				Initial Meter in LU Reading at 11 kV side PSS	Final Meter Reading in LU at 11 kV side PSS	Energy Consumption in LU (July 2013)	15 kVA	25 kVA	50 kVA	63 kVA	100 kVA	150 kVA	160 kVA	200 kVA	250 kVA	300 kVA	315 kVA	400 kVA	500 kVA	630 kVA	660 kVA	750 kVA	990 kVA	HT Load in kVA		
1	Jayanagar	Arehalli	11 KV F1- Nandi Feeder	184.037	190.815	6.779				2	7				21	2								150		6826
			11 KV F2- Stn. Aux. Feeder	1.419	1.433	0.013																				0
			11 KV F3- Ittamadu Feeder	131.556	138.018	6.462				1	7				9				1							3513
			11 KV F5- Kadirenahalli Feeder	115.011	130.068	15.057				2	23				33											10676
			11 KV F8- Komarla Feeder	175.178	181.381	6.203				3	12				14				2					350		6239
			11 KV F4- Chikkallasandra Feeder	38.844	46.544	7.700				1	39				32				1					285		12748
			11 KV F6- Komarla Bridge Feeder	28.995	34.103	5.108				1	3				9									995		3608
			11 KV F7- B Nagar Feeder	5.364	9.071	3.707					14				11				1							4650
			11 KV F9- HoskerehalliFeeder	41.181	49.046	7.865					17				21				1							7450
			11 KV F10 - AG'S Layout Feeder	24.307	55.539	31.232		1		8																529
2	Jayanagar	Elita	11KV F1-Phase 1A feeder	64.419	65.763	1.344													8							4000
			11KV F2-K R Layout feeder	1332.375	1339.215	6.840				2	18				17				1				1			7666
			11KV F3- Sharada nagar feeder	774.195	778.405	4.210					2				11				2							3950
			11KV F4- Phase 1B feeder	315.907	317.126	1.218													8							4000
			11KV F5- Phase 1B feeder	27.077	29.939	2.863													1	1		1	3			4850
			11KV F6 Stn. Aux. feeder	0.003	0.014	0.011																				0
3	Jayanagar	ISRO	11KV F1 Stn. Aux. feeder	0.894	0.905	0.011																				0
			11KV F2 J C Industrial feeder	465.537	474.831	9.294				7	20			1	37	1			1					3480		16171
			11KV F3 Yalachenahalli feeder	417.720	427.507	9.787					15				20				5					400		9400
			11KV F4 ISRO Pipe line feeder	601.059	613.140	12.081				2	15				30	1			5							11926
			11KV F5 Idle. feeder	0.000	0.000	0.000																				0
			11KV F6 Idle. feeder	0.000	0.000	0.000																				0
			11KV F7 K S Layout feeder	542.532	552.917	10.385				1	15				19				1					770		7583
			11KV F8 Vikramnagar feeder	537.773	544.419	6.647				5	18				27									970		9835
			11KV F9 G.Palya L-(1+2) feeder	441.170	453.029	11.859				3	15				33				3					620		12059
			11KV F10 K S Water Tank feeder	388.328	398.332	10.005				2	3				12									2595		6021
			11KV F11 Idle feeder (ID)	45.908	52.104	6.197																				0
			11KV F12 Idle feeder (ID)	0.000	0.000	0.000																				0
4	Jayanagar	Import point from R R Nagar GSS of North Circle	11KV F6 FEEDER	0.000	0.000	0.000		1		5	24				48				2							15740
			11KV F13 FEEDER	0.000	0.000	0.000					1				7											1850
			11 KV F5 FEEDER	0.000	0.000	0.000					7				3				2							2450
			11 KV F12 FEEDER	0.000	0.000	0.000				3	5				48											12689

Sl. No.	Name of Division	Name of PSS	Name of Outgoing 11 kV Feeder	A	B	C=B-A	DISTRIBUTION TRANSFORMER DETAIL IN NOS.																		No. of HT Bulk	Total DTR Capacity in kVA (incl. Bulk)
				Initial Meter in LU Reading at 11 kV side PSS	Final Meter Reading in LU at 11 kV side PSS	Energy Consumption in LU (July 2013)	15 kVA	25 kVA	50 kVA	63 kVA	100 kVA	150 kVA	160 kVA	200 kVA	250 kVA	300 kVA	315 kVA	400 kVA	500 kVA	630 kVA	660 kVA	750 kVA	990 kVA	HT Load in kVA		
5	Jayanagar	BMTC GSS	11 KV F1 STN. AUX	93.686	93.692	0.006																				0
			11 KV F2 SUBBAIAH CIRCLE FEEDER	1403.840	1423.395	19.555				2	7				26				9							11826
			11 KV F3 FEEDER	486.713	501.225	14.513					11				16	1			3					5485		12385
			11 KV F4 KSRTC Comp. FEEDER	646.835	654.789	7.954				2	2				6				3					3055		6381
			11 KV F5 KSRTC New FEEDER	1287.288	1297.124	9.836				2	10				18	1			3					1640		9066
			11 KV F6 Wilson Garden FEEDER	467.840	472.550	4.710				3	8				6	1			1					3115		6404
			11 KV F7 Puspabhaban FEEDER	489.365	496.965	7.601				4	8				8				1					1250		4802
			11 KV F8 K H Road FEEDER	649.410	655.916	6.505				1	9				7				2					750		4463
			11 KV F9 Corp.Hospital FEEDER	97.684	102.854	5.170					2				9				2					1395		4845
			11 KV F10 Pure Farma FEEDER	880.881	892.695	11.814				3	4				12				2					750		5339
			11 KV F11 Pai Hotel FEEDER	617.939	623.840	5.901				3	4				7				3			1		5300		9889
			11 KV F12 M Vill. Road FEEDER	533.489	540.360	6.872				3	8				8				2					2845		6834
			11 KV F13 Export to East Circle FEEDER (E)	764.753	774.290	9.537																				0
			11 KV F14 Export to East Circle FEEDER (E)	193.865	199.103	5.237																				0
6	Jayanagar	Nimhans	13 KV F1 STN. AUX Feeder	2.701	2.764	0.063																				0
			11 KV F2 Windsor Manner Feeder	487.925	493.147	5.221									13				1							3750
			11 KV F3 Nimhans RMU Feeder	133.221	138.152	4.930					2				14				5							6200
			11 KV F4 H.Thappa RMU Feeder	1320.560	1338.296	17.736					7				21				3							7450
			11 KV F5 jayanagar 2 Feeder	1219.445	1231.227	11.783				1	8				13				9				4			12573
			11 KV F11 Idle Feeder (ID)	11.115	11.115	0.000																				0
			11 KV F13 Garuda Swagath Feeder (E)	67.243	68.900	1.658																				0
			11 KV F14 Nimhans Hosp. Feeder (E)	282.417	288.239	5.822																				0
			11 KV F6 Manthri Garden Feeder	333.083	339.017	5.934					1				4				4							3100
			11 KV F7 drive In BTM Feeder (E)	1247.636	1255.050	7.415																				0
			11 KV F8 Accenture Feeder (E)	1223.768	1233.042	9.274																				0
			11 KV F9 MNK Park Feeder (E)	531.293	541.514	10.221																				0
			11 KV F10 R V Road Feeder	935.633	948.441	12.809					1				8				5							4600
			11 KV F12 Accenture Feeder (E)	549.769	560.296	10.527																				0
7	Jayanagar	P B Nagar	11 KV F1 Banagirinagar Feeder	578.846	584.879	6.033				3	7				23				3							8139
			11 KV F2 JayanagarFeeder	1079.790	1090.843	11.053				2	11				33				7				1			13966
			11 KV F3 S9 Office Feeder	480.629	485.348	4.719					1				8				2							3100
			11 KV F4 BDA Complex Feeder	541.739	547.455	5.717				5	6				18				3			1				7665
			11 KV F5 9th Main Bata Feeder	1135.713	1148.367	12.654				1	43		1		29				7				1			16263
			11 KV F6 Stn. Aux Feeder	1.051	1.063	0.012																				0
			11 KV F13 Mega Mart Feeder	82.106	174.168	92.062					3				4				3			1				3550
			11 KV F7 CKA Feeder	356.487	361.766	5.279				1	6				6				2							3163
			11 KV F8 Rajiv Nagar Feeder	806.426	815.183	8.757				7	30				18				7							11441
			11 KV F9 Padmanava Nagar Feeder	623.711	630.789	7.078				1	16				19				2							7413
			11 KV F10 Yarab Nagar Feeder	739.935	749.508	9.573				1	7				9				3							4513

Sl. No.	Name of Division	Name of PSS	Name of Outgoing 11 kV Feeder	A	B	C=B-A	DISTRIBUTION TRANSFORMER DETAIL IN NOS.																		No. of HT Bulk	Total DTR Capacity in kVA (incl. Bulk)
				Initial Meter in LU Reading at 11 kV side PSS	Final Meter Reading in LU at 11 kV side PSS	Energy Consumption in LU (July 2013)	15 kVA	25 kVA	50 kVA	63 kVA	100 kVA	150 kVA	160 kVA	200 kVA	250 kVA	300 kVA	315 kVA	400 kVA	500 kVA	630 kVA	660 kVA	750 kVA	990 kVA	HT Load in kVA		
			11 KV F11 Feeder	686.823	695.112	8.289					13				4				1							
			11 KV F12 Feeder	621.038	627.023	5.985					5				1											750
8	Jayanagar	S Pura	11 KV F2 Krishna Mill Feeder (B)	809.576	818.398	8.821																				0
			11 KV Idle Feeder (ID)	0.000	0.000	0.000																				0
			11 KV F4 Metro Feeder	621.038	624.413	3.375					2				6											1700
			11 KV F5 Bharath Layout Feeder	693.770	698.751	4.981				8	8				31											9054
			11 KV F6 Remco Feeder	1346.373	1365.021	18.648				1	12				32											9263
			11 KV F7 Stn. Aux. Feeder	11.888	11.987	0.098																				0
			11 KV F8 B Guddi(1+2) Feeder	743.003	746.238	3.236				3	6				19											5539
			11 KV F10 Gubballa Feeder	175.532	180.015	4.483				3	19			1	35											11039
			11 KV F11 Agara Feeder	378.218	383.823	5.605				1																63
			11 KV F1 Rural(1+2) Feeder	229.916	239.926	10.010					18				8				8							7800
			11 KV F9 Jayanagara(1+2) Feeder	301.629	306.438	4.809				7	11				26				1							8541
			11 KV F12 Feeder (E)	452.428	457.199	4.771																				0
			11 KV F13 Adarsha 1 Feeder	261.641	262.464	0.824				1	1				6											1663
			11 KV F14 Adarsha 2Feeder	217.798	225.152	7.354				2	3				9				3							4176
			11 KV F15 Mantri T-1 Feeder	48.170	50.724	2.554													7							3500
			11 KV F16 Mantri T-2Feeder	21.960	21.960	0.000													6							3000
9	Jayanagar	Adugodi	11 KV F6 Police Qtr.Feeder (E)	117.026	132.851	15.825																				0
			11 KV F7 K Bhavana Feeder	128.773	132.965	4.193				1	5				9											2813
			11 KV F8 Kudremukh Feeder (E)	476.824	479.308	2.484																				0
			11 KV F9 Idle Feeder	0.000	0.000	0.000																				0
			11 KV F10 Feeder	260.976	276.252	15.276				7	6				24				12				2			15021
			11 KV F20 Feeder	1986.554	1996.460	9.906									3											750
			11 KV F21 Oracle Feeder	588.180	592.950	4.771																				0
			11 KV F1 Old Madivala Feeder	540.072	553.570	13.498																				0
			11 KV F 2 Feeder	137.359	144.778	7.419				6	19				21				3							9028
			11 KV F3 Idle Feeder	0.000	0.000	0.000																				0
			11 KV F4 B'lore Dairy Feeder	498.665	505.987	7.321				1	8				11				1							4113
			11 KV F5 Wilson Garden Feeder	82.767	87.859	5.092				2	3				6				6			1	3			8646
			11 KV F17 Forum Feeder (B)	580.547	587.458	6.911																				0
			11 KV F18 IBM Feeder	0.000	0.000	0.000																				0
			11 KV F19 Idle Feeder	0.000	0.000	0.000																				0
			11 KV F22 S.J Wood's Feeder	0.000	0.000	0.000																				0
			11 KV F27 East Land hold. Feeder (E)	70.989	721.768	650.779																				0
			11 KV F11 J Nivas College Feeder (E)	572.424	583.047	10.623																				0
			11 KV F12 HSR Feeder	145.988	148.989	3.001									10				2							3500
			11 KV F13 Ansal Krishna Feeder (ID)	535.304	539.562	4.259																				0
			11 KV F14 Kalyanamantapa Feeder (E)	627.642	637.310	9.667																				0

Sl. No.	Name of Division	Name of PSS	Name of Outgoing 11 kV Feeder	A	B	C=B-A	DISTRIBUTION TRANSFORMER DETAIL IN NOS.																		No. of HT Bulk	Total DTR Capacity in kVA (incl. Bulk)
				Initial Meter in LU Reading at 11 kV side PSS	Final Meter Reading in LU at 11 kV side PSS	Energy Consumption in LU (July 2013)	15 kVA	25 kVA	50 kVA	63 kVA	100 kVA	150 kVA	160 kVA	200 kVA	250 kVA	300 kVA	315 kVA	400 kVA	500 kVA	630 kVA	660 kVA	750 kVA	990 kVA	HT Load in kVA		
			11 KV F15 2N KML Feeder (E)	222.839	227.135	4.296																				0
			11 KV F16 Mico KML Feeder (E)	178.287	347.922	169.635																				0
			11 KV F23 Kudremukh Feeder (E)	557.819	571.544	13.725																				0
			11 KV F24 Umaya Hldg. Feeder	0.000	0.000	0.000																				0
			11 KV F25 Total Feeder (E)	267.081	272.702	5.620																				0
			11 KV F26 Tepaoessae Feeder	0.000	0.000	0.000																				0
10	Jayanagar	Import point from V H Muss	11 KV F15 City Market Feeder	0.000	0.000	0.000					9				6				10							7400
11	Jayanagar	Banashankari	11 KV F4-Vidyapeeta Feeder (E)	256.794	262.189	5.394																				0
			11 KV F6 BSK Stage-2 Feeder	188.072	194.315	6.243		2		13				22				7								8069
			11 KV F20 Sira Circle Feeder	190.521	195.682	5.161				1				9				3								3063
			11 KV F21 Muneeshwara Block Feeder	324.341	324.551	0.210					8				21				1			1				7300
			11 KV F5 NTY Layout Feeder	286.926	286.926	0.000																				0
			11 KV F1 Srinagar Feeder (E)	148.278	148.548	0.270																				0
			11 KV F3 Girinagar Feeder (E)	97.427	97.603	0.176																				0
			11 KV F2 Bank Colony Feeder	174.885	175.161	0.276					8				21				1			1				7300
			11 KV F9 Thy.Nagar Feeder (E)	331.194	338.244	7.050																				0
			11 KV F8 Stn. Aux. Feeder	13.286	13.325	0.039																				0
			11 KV F7-Hanumanthnagar-2Feeder	1.235	1.235	0.000																				0
			11 KV F10-Bull Tempe Road Feeder (E)	440.292	447.502	7.210																				0
			11 KV F12 Bnskri 3rd Stage Feeder	171.682	180.636	8.954		5		20				22				4								7385
			11 KV F11-Basavanagudi Feeder (E)	493.648	503.250	9.602																				0
			11 KV F15 Pramod Layout Feeder	977.055	987.415	10.360					11				29											8350
			11 KV F14-Hanumanthnagar-1 Feeder	0.000	0.000	0.000																				0
			11 KV F13-Nagendra Block Feeder (E)	1477.428	1482.179	4.752																				0
			11 KV F19 Feeder	0.000	0.000	0.000																				0
			11 KV F18 Feeder	194.031	197.102	3.071																				0
			11 KV F17 Katraguppe 2 Feeder	312.588	320.270	7.682				3	16				24				3							9289
			11 KV F16-Pes College Feeder (E)	1262.150	1266.169	4.020																				0
12	Jayanagar	Import point from Khodays, HSR Div.of South Circle	11 KV F4 Srinidhi Layout Feeder	0.000	0.000	0.000					23			1	17											6750
			11 KV F-5 Glass Factory Feeder	0.000	0.000	0.000									1											250
			11 KV F9 Doddakalsandra Feeder	0.000	0.000	0.000					2				18											4700
			11 KV F14 Pnb Nagar Feeder	0.000	0.000	0.000					8			1	21											6250
13	Jayanagar	Jayadeva	11 KV F-1 Btm 2nd Stage Ias Colony Feeder	288.641	297.977	9.335				3	12				33	1			10							14939
			11 KV F2 Rmu J3 (40% U1,S1) Feeder	158.358	168.758	10.400				2	15				26				7							11626
			11 KV F-3 Rmu Jp Nagar Feeder	101.773	111.383	9.609				3	12				22				8							10889
			11 KV F4 Hanumanthappa Rmu (50%,U-1,S1)	195.275	207.608	12.333					4				29				9							12150
			11 KV F-5 Sad-22 Feeder	73.376	78.869	5.494					7				18				2			1				6950
			11 KV F8 Saad 22 Feeder	1146.858	1157.079	10.221					9				14				1							4900
			11 KV F-9 Central Silk Board Feeder	986.678	999.809	13.131				11	42				49				1			1				18393

Sl. No.	Name of Division	Name of PSS	Name of Outgoing 11 kV Feeder	A	B	C=B-A	DISTRIBUTION TRANSFORMER DETAIL IN NOS.																		No. of HT Bulk	Total DTR Capacity in kVA (incl. Bulk)
				Initial Meter in LU Reading at 11 kV side PSS	Final Meter Reading in LU at 11 kV side PSS	Energy Consumption in LU (July 2013)	15 kVA	25 kVA	50 kVA	63 kVA	100 kVA	150 kVA	160 kVA	200 kVA	250 kVA	300 kVA	315 kVA	400 kVA	500 kVA	630 kVA	660 kVA	750 kVA	990 kVA	HT Load in kVA		
			11 KV F14-Ibm Feeder (E)	801.346	803.716	2.370																				0
			11 KV F-10 Rmu-Keb Layout Feeder	290.091	296.099	6.008				2	10				23				4			1				9626
			11 KV F-11 Ns Palya Industrial Feeder	298.567	311.524	12.957				3	12				33				1			10				17639
			11 KV F-12 Shopper Stop Feeder	87.207	100.997	13.790				5	23				30				13					430		17045
			11 KV F13 Vijaya Bank Colony Feeder	121.391	121.544	0.153		1		2	7				9				18					1222		13323
			11 KV F16 Sjic (100%) Feeder (E)	20.886	23.504	2.618																				0
			11 KV F7 Station Aux Feeder	128.455	131.627	3.172																				0
			11 KV F15 Manthry Garden (40% U1,S1) Feeder	43.828	46.332	2.504					2				2								1			1690
			11 KV F17 (100%) Feeder	388.429	398.429	10.000				4	9				17				6				2			10382
			11 KV F-18 Airtel Tower Building Feeder	697.070	704.363	7.292					13				23				3							8550
			11 KV F19-Accenture Feeder (E)	267.972	274.289	6.317																				0
			11 KV F-20 Btm Ist Stage Feeder	969.614	988.080	18.467				2	5				29				1							8376
			11 KV F21 Vakeel Square Feeder (E)	158.226	161.708	3.482																				0
			11 KV F-22 JP Sobha Developers Feeder	77.420	82.377	4.957																				0
14	Jayanagar	Import point from L&T (South), HSR Div.of South Circle	11 KV F-12 -Motappa Compound Feeder	0.000	0.000	0.000				1	11				15											4913
15	Jayanagar	Import point from Austin town, HSR Div.of South Circle	11 KV F-4 -Trinity Church Feeder	0.000	0.000	0.000																				0
			11 KV F-9 S. L Apptt. Feeder	0.000	0.000	0.000																				0
			11 KV F-1-Richmond Park Feeder	0.000	0.000	0.000																				0
16	Jayanagar	RBI	11 KV F1 Chunchaghatta Feeder	139.259	146.270	7.011					11			27					5							9000
			11 KV F2 Glass Factory Feeder	439.027	450.164	11.137					6			18												4200
			11 KV F-3 Kodichikkanahalli Feeder	381.228	394.234	13.006				4	15			13					6							7352
			11 KV F-4 Rbi L/O-1 Feeder	93.075	93.716	0.641					1			10										500		2600
			11 KV F-5 Rbi L/O-2 Feeder	92.295	93.952	1.658					3			8												1900
			11 KV F7 Stn.Auxullary Feeder	88.282	88.297	0.015																				0
			11 KV F8-South City Feeder (E)	166.535	169.798	3.263																				0
			11 KV F-9 Vijaya Bank Layout Feeder (E)	236.626	241.255	4.629																				0
			11 KV F6-Kleen Pack Feeder (E)	115.670	118.666	2.996																				0
			11 KV F10-Kottanur Feeder (E)	294.507	301.321	6.814																				0
			11 KV F11 Jp Nagar 5th Phase Feeder	327.126	331.572	4.446					9			18					2							5500
			11 KV F12 Puttenahalli Feeder	246.120	251.002	4.882					7			23					1							5800
			11 KV F13 Brigade Millenium -1 Feeder	27.754	28.226	0.472																				0
			11 KV F14 Brigade Millenium -2 Feeder	183.293	185.759	2.466					2				3									100		1050
			11 KV F15 Brigade Gardenia-1 Feeder	22.173	23.093	0.919				1	16			1	22				5					730		10593
			11 KV F16 Brigade Gardenia-2 Feeder	39.320	40.472	1.152													6				1			3990
17	Jayanagar	Import point from NGV,KML Div.of South Circle	11 KV F5 NGV Feeder	0.000	0.000	0.000																				0
			11 KV F13 Forum Feeder	0.000	0.000	0.000																				0

Sl. No.	Name of Division	Name of PSS	Name of Outgoing 11 kV Feeder	A	B	C=B-A	DISTRIBUTION TRANSFORMER DETAIL IN NOS.																		No. of HT Bulk	Total DTR Capacity in kVA (incl. Bulk)
				Initial Meter in LU Reading at 11 kV side PSS	Final Meter Reading in LU at 11 kV side PSS	Energy Consumption in LU (July 2013)	15 kVA	25 kVA	50 kVA	63 kVA	100 kVA	150 kVA	160 kVA	200 kVA	250 kVA	300 kVA	315 kVA	400 kVA	500 kVA	630 kVA	660 kVA	750 kVA	990 kVA	HT Load in kVA		
18	Jayanagar	B Station	11 KV F6 Wipro RMU Feeder	0.000	0.000	0.000					6				9				2							3850
19	Jayanagar	Sarakki	11 KV F6 (100%) Feeder	142.114	151.391	9.277					3				21				1					4005		10055
			11 KV F7 (100%)Feeder	305.324	314.960	9.636				6	14				31	1			11					2105		17433
			11 KV F-8 Jp Nagar 5th Phase Feeder	119.265	121.918	2.653					4				3				2					650		2800
			11 KV F1-Brigade SoftwareFeeder	360.205	362.561	2.356																				
			11 KV F-2,Nagarjuna Enclave Feeder	34.748	39.781	5.033				2	10				17				7					2000		10876
			11 KV F-3 Rajalashmi Rmu Feeder	201.551	209.059	7.508				4	15				16				3					110		7362
			11 KV F-4 Rmu Jpnagar-I Feeder	71.201	78.546	7.345				1	7				13				5				1	1203		8706
			11 KV F12 (60% U1, S1) Feeder	268.496	278.234	9.739				1	10			1	35				2				5	6465		22428
			11 KV F-23 Kr Layout Feeder	494.531	501.453	6.923					21			1	26				9					2230		15530
			11 KV F-27 Bangalore Central-2 Feeder	161.799	165.024	3.225																		3400		3400
			11 KV F9 Idle Feeder	0.000	0.000	0.000																				0
			11 KV F-10 Dollars Layout Feeder	0.288	6.228	5.940				4	13				20				1					500		7552
			11 KV F-11 Hulimavu Feeder	0.270	1.935	1.665					2				8				1					3727		6427
			11 KV F-5 Bg Rural Feeder	0.086	10.211	10.125																		150		150
			11 KV F-24 Jp Nagar 2nd Phase Feeder	724.185	732.425	8.240				2	16				30	2			12					1555		17381
			11 KV F-13 Glass Factory Feeder	0.188	5.768	5.580					9				9									1270		4420
			11 KV F-14 Sarakki Village Feeder	0.216	7.236	7.020					10				18				4					70		7570
			11 KV F-15 Jp Nagar 2nd Phase/Btm Feeder	0.357	8.502	8.145					17				29				3							10450
			11 KV F-16 Shanti Appts Feeder	0.230	6.260	6.030					6				16				4			1	1	635		8975
			11 KV F17 (100%) Feeder (E)	0.188	0.470	0.282																				0
			11 KV F-26 Kalyani Magnum Feeder	90.272	103.945	13.673																		7450		7450
			11 KV F25-Bellmount Feeder	129.438	129.440	0.002					19				16				4							7900
			11 KV F-18 Wms Feeder	0.138	4.188	4.050					9				31	1			4					803		11753
			11 KV F-19 Rmu Jp Nagar 4th Phase Feeder	0.123	5.703	5.580				1	10				28				2					4850		13913
			11 KV F-20 Sad-21 Feeder	0.258	9.168	8.910					9				21				2			1		500		8400
			11 KV F-21 Jp Nagar 5th Phase 24 Th Main	0.282	8.832	8.550				1	33			2	37				1					100		13613
			11 KV F-22 Feeder	0.002	0.047	0.045																				0
Jayanagar Division TOTAL						**2090.673**		**10**	**0**	**238**	**1232**	**0**	**1**	**179**	**2075**	**12**	**0**	**14**	**396**	**1**	**0**	**22**	**26**	**82960**	**0**	**1023384**
20	KML	Austin Town	11 KV F16 Ing-Vysaya Feeder (E)	40.219	41.776	1.557																				0
			11 KV F15-Shobha Pearl Feeder (E)	148.186	150.871	2.685																				0
			11 KV F17-Garudamall Feeder (E)	19.567	20.947	1.380																				0
			11 KV F2-Air Force Hosp. Feeder	88.161	93.841	5.679		1		2	4				6				5				1	1075		6616
			11 KV F3-Vannerpet. Feeder	256.418	268.489	12.070				2	6				9				3					1247		5723
			11 KV F4-Trinity Church. Feeder (E)	5.168	20.048	14.880																				0
			11 KV F6-Ksrp-R.M.U. Feeder (E)	95.244	102.811	7.567																				0
			11 KV F7-Austin Town. Feeder	17.259	36.923	19.664				2	16				24				3					890		10116
			11 KV F8-Life Style. Feeder	162.062	167.258	5.196					4				5								1	2875		5515

Sl. No.	Name of Division	Name of PSS	Name of Outgoing 11 kV Feeder	A	B	C=B-A	DISTRIBUTION TRANSFORMER DETAIL IN NOS.																		No. of HT Bulk	Total DTR Capacity in kVA (incl. Bulk)
				Initial Meter in LU Reading at 11 kV side PSS	Final Meter Reading in LU at 11 kV side PSS	Energy Consumption in LU (July 2013)	15 kVA	25 kVA	50 kVA	63 kVA	100 kVA	150 kVA	160 kVA	200 kVA	250 kVA	300 kVA	315 kVA	400 kVA	500 kVA	630 kVA	660 kVA	750 kVA	990 kVA	HT Load in kVA		
			11 KV F9-S.L Apartment. Feeder (E)	337.034	342.385	5.352																				0
			11 KV F10-Station Auxillary. Feeder	2.604	2.630	0.026																				0
			11 KV F18-Radhikaverma Rmu Feeder (E)	233.538	236.964	3.426																				0
			11 KV F19- Victoria Road Feeder	95.369	105.376	10.007									9									500		2750
			11 KV F11-Austintown Bwssb Feeder	344.980	352.760	7.780				1					5									700		2013
			11 KV F1-Richmond Park. Feeder (E)	1338.400	1348.660	10.260																				0
			11 KV F12-Shopper Stop. Feeder (E)	629.520	640.440	10.920																				0
			11 KV F5-A.Nagar A.O.P.S. Feeder (E)	1068.380	1081.360	12.980																				0
			11 KV F13-Neelasandra. Feeder	1135.220	1151.800	16.580					7				15				2					585		6035
21		K&C Valley	11 KV F13-Intel Srr-1 Feeder	0.000		0.000																				0
			11 KV F1-Station Auxillary Feeder	75.042	75.068	0.026																				0
			11 KV F2-Ejipura Feeder	1108.197	1109.401	1.204				3	14				17									1580		7419
			11 KV F3-Amarjyoti Layout Feeder	440.000	440.523	0.523		2		1	25				17				1					1750		9113
			11 KV F4-Run Way Feeder	1422.943	1422.943	0.000																				0
			11 KV F5-Lucent Feeder	HOLD																						0
			11 KV F14-Goldman Sachs Feeder			0.000																				0
			11 KV F15-Signature Feeder			0.000																		3000		3000
			11 KV F16-Cherry Hill Feeder			0.000																				0
			11 KV F17-Mahesh Khaitan (Salarpuria)	1021.744	1032.646	10.902																		6000		6000
			11 KV F18-Panathur+F19 Dynasty	378.450	402.625	24.175																		1820		1820
			11 KV F6-Chalagatta Feeder	2423.079	2425.689	2.610									3											750
			11 KV F7-Control Tower Feeder	432.067	435.916	3.849					2													925		1125
			11 KV F8-Kempapura Feeder	1883.727	1886.165	2.438																		8560		8560
			11 KV F9-Verifone Feeder			0.000																				0
			11 KV F10-B.W.S.S.B Feeder (WS)	64.031	68.843	4.812																				0
			11 KV F11-Golf Link S/W Feeder			0.000																		2500		2500
			11 KV F12-Bwssb-II Feeder	633.676	648.514	14.838					11				11											3850
			11 KV F20- Sriram Spandhana Feeder	121.240	123.146	1.906									17											4250
			11 KV F21- IAM Feeder	0.000		0.000																				0
22	KML	Amarjyothi	11 KV F12-Divyashree & Viveknagar	445.590	457.460	11.870									7											1750
			11 KV F13 Glsp-II Feeder	0.000		0.000																				0
			11 KV F1-Ejipura Feeder	467.317	472.083	4.766				12					7				1							3006
			11 KV F2-J.R.R Layout Feeder	685.080	695.150	10.070		1		2	5				10											3151
			11 KV F3-Sasken + F13-Gls-Ii Feeder	295.342	305.126	9.784																		1750		1750
			11 KV F9-Shanti Sagar Rmu Feeder	444.238	458.044	13.806					2															200
			11 KV F-22-New Century Golf Link	314.864	320.676	5.812																		2000		2000
			11 KV F5-D.D-1 Feeder	363.409	369.697	6.288																		3750		3750
			11 KV F6-D.D-2 Feeder	175.814	179.887	4.073																		1000		1000
			11 KV F7-K.R Layout Feeder	310.808	317.559	6.751				2	30				8				3					6817		13443

Sl. No.	Name of Division	Name of PSS	Name of Outgoing 11 kV Feeder	A	B	C=B-A	DISTRIBUTION TRANSFORMER DETAIL IN NOS.																		No. of HT Bulk	Total DTR Capacity in kVA (incl. Bulk)
				Initial Meter in LU Reading at 11 kV side PSS	Final Meter Reading in LU at 11 kV side PSS	Energy Consumption in LU (July 2013)	15 kVA	25 kVA	50 kVA	63 kVA	100 kVA	150 kVA	160 kVA	200 kVA	250 kVA	300 kVA	315 kVA	400 kVA	500 kVA	630 kVA	660 kVA	750 kVA	990 kVA	HT Load in kVA		
			11 KV F8-Golf Club Feeder	308.768	314.595	5.827				1	11				11									4328		8241
			11 KV F4-14 Th Cross Rmu Feeder	170.735	174.470	3.735					1				2									7000		7600
			11 KV F10-Station Auxillary Feeder	1.759	1.788	0.029																				0
			11 KV F11-Gold Link S/W-I Feeder	271.728	283.561	11.833																		4000		4000
			11 KV F14-Esi Feeder (E)	372.628	384.623	11.995																				0
			11 KV F15-Maruthi Infotech Feeder (B)	129.455	138.331	8.876																				0
			11 KV F16-Cherry Hill Feeder	540.432	540.432	0.000																		3000		3000
			11 KV F17-Naveen Terrace Feeder	246.860	258.018	11.158									13				1							3750
			11 KV F18- 24 / 7 Feeder	511.548	520.148	8.600																		6000		6000
			11 KV F19-Mysis Feeder (B)	183.518	185.984	2.466																				0
23	KML	GLSWP	11 KV F1 - Texas Park Rmu Feeder	123.687	131.143	7.456				1	20				28				3							10563
			11 KV F2 - Misys Feeder	5.184	11.802	6.618																		1800		1800
			11 KV F3 - Ramaiah Reddy DP Feeder	366.601	399.301	32.700					15				17				3				1			8240
			11 KV F4 - Fidelity Feeder	1.164	6.892	5.728																		2500		2500
			11 KV F5 - Ibm D-Block Feeder	23.582	42.383	18.801																		2400		2400
			11 KV F6 - Sriram Properties Feeder	34.451	35.878	1.427									11											2750
			11 KV F7 - Dell Feeder	2.440	13.812	11.372																		2800		2800
			11 KV F8 - Yahoo Feeder	0.741	12.364	11.623																		2500		2500
			11 KV F9 - 24/7 Feeder	644.167	657.750	13.583																		2800		2800
			11 KV F10 - Maruthi Infotech Feeder	0.000	0.645	0.645																		2800		2800
			11 KV F11 - Covansys Feeder	0.266	10.119	9.852																		2500		2500
			11 KV F12 - Cherry Hill Feeder	0.000	3.330	3.330																		2200		2200
			11 KV F13 - Sun River Feeder	0.108	6.311	6.203																		3000		3000
			11 KV F14 - Station Aux. Feeder	100.522	100.542	0.020																				0
			11 KV F15 Net App Feeder (B)	128.256	148.894	20.638																				0
24	KML	Bagmane	11 KV F-10 Mphasis (Tri Drib) Feeder	6399.620	6473.860	74.240																		6500		6500
			11 KV F9-Laurel Block. Feeder	1122.912	1138.578	15.666																		9000		9000
			11 KV F1 Station Auxiliary Feeder	1.386	1.401	0.015																				0
			11 KV F2- Motorala Feeder	1219.458	1232.176	12.718																		4800		4800
			11 KV F3- Texas Feeder	1264.936	1275.312	10.376																		4000		4000
			11 KV F4 Bagamane Retail Block	662.468	681.084	18.616																		5650		5650
			11 KV F5-Baghmane Lake View Feeder	1130.460	1142.696	12.236																		4300		4300
			11 KV F6-Cts Feeder Feeder	462.100	465.252	3.152																		1800		1800
			11 KV F7- Bagamane Parin Feeder	114.492	115.904	1.412																		3200		3200
			11 KV F8- S7 Resdential Feeder	580.312	590.066	9.754				4	32				32				4				1			14442
25	KML	Import point from Leela Stn.	11 KV F4- Manipal Feeder	0.000											11									5040		7790
			11 KV F11- Intel Feeder	0.000																				3200		3200

Sl. No.	Name of Division	Name of PSS	Name of Outgoing 11 kV Feeder	A	B	C=B-A	DISTRIBUTION TRANSFORMER DETAIL IN NOS.																		No. of HT Bulk	Total DTR Capacity in kVA (incl. Bulk)
				Initial Meter in LU Reading at 11 kV side PSS	Final Meter Reading in LU at 11 kV side PSS	Energy Consumption in LU (July 2013)	15 kVA	25 kVA	50 kVA	63 kVA	100 kVA	150 kVA	160 kVA	200 kVA	250 kVA	300 kVA	315 kVA	400 kVA	500 kVA	630 kVA	660 kVA	750 kVA	990 kVA	HT Load in kVA		
26	KML	HAL	11 KV F-1 Geethanjali Feeder (E)	360.006	366.736	6.730																				0
			11 KV F-4 Indiranagar Feeder (E)	720.876	737.336	16.460																				0
			11 KV F-6 J.B.Nagar Feeder (E)	709.570	720.796	11.226																				0
			11 KV F-9 Station Auxiliary Feeder	8.574	8.728	0.154																				0
			11 KV F-12 Tata-Housing. Feeder	688.238	702.088	13.850				5	22				33				9							15265
			11 KV F-15 Dynasty Feeder	797.670	820.632	22.962																		5000		5000
			11 KV F5-Beml Feeder	47.884	53.988	6.104																		3500		3500
			11 KV F7 Airport Road Feeder	521.587	533.101	11.514					2				19				4				1	5577		13517
			11 KV F- 8 ADA Feeder	699.738	717.640	17.902				2	16				30				8							13226
			11 KV F-14 Mallesh Palya Feeder	921.194	940.668	19.474				12	53				59				7					80		24386
			11 KV F-10 Texas Feeder	406.656	414.474	7.818																		6184		6184
			11 KV F-11 Aiport Feeder	216.866	225.890	9.024																		750		750
			11 KV F-13 Doddanakundi. Feeder	661.292	672.304	11.012		2		4	30				15				2					1750		9802
			11 KV F-2 Marathahalli. Feeder	1039.504	1057.829	18.325		1		8	34				30				3					3870		16799
			11 KV F-3 BEML - I. Feeder	0.016	0.016	0.000																				0
			11 KV F-16 IAM(Force) Feeder	0.457	0.462	0.006																		3000		3000
27	KML	Import point from HSR Stn., HSR Div.of South Circle	11 KV F-11 Raheja Residency Feeder	0.000							8				24				1					4500		11800
28	KML	K.B Halli	11 KV F6-Station Auxillary Feeder	1.355	1.384	0.029																				0
			11 KV F15-Primal Project Feeder	464.924	488.022	23.098																		8120		8120
			11 KV F14 - Purva Fountain Square	358.015	358.015	0.000				1									15					1050		8613
			11 KV F1 - Vrindavan Tech Park Feeder	229.818	248.804	18.986																		7000		7000
			11 KV F2 -Marathalli Bridge Feeder	331.800	340.406	8.606					6		5								2			2000		4720
			11 KV F3 - Belegere Feeder	514.602	528.818	14.216				2	16				4				1					450		3676
			11 KV F4 - Monekolala Temple Feeder	1331.460	1352.150	20.690				5	41				30				3					6030		19445
			11 KV F12 - Chinnappanahalli Feeder	314.840	314.840	0.000																				0
			11 KV F7 - Marathahalli Feeder	538.752	560.170	21.418																		1740		1740
			11 KV F8 - BWSSB Feeder	1415.830	1432.226	16.396																		10498		10498
			11 KV F9 - Dental College Feeder	668.224	686.432	18.208				2	28				10									2000		7426
			11 KV F10 - Tulasi Theatre Road Feeder	655.122	669.784	14.662				2	24				9				3			1		2250		9276
			11 KV F11 - KMF Feeder	118.136	119.744	1.608																		350		350
			11 KV F5 - Akruthi Apartment Feeder	577.746	605.840	28.094				1	25				18				3					8210		16773
			11 KV F13 - Purva Riviera Feeder	20.204	20.204	0.000													19							9500
29	KML	Import point from Jaydeva Stn., HSR Div.of South Circle	11 KV F14-IBM Feeder	0.000							1				2				1					2350		3450
			11 KV F19-Accenture Feeder	0.000																				5850		5850
			11 KV F21 Vakeel Square Feeder	0.000						1	3				2				1					1500		2863
			11 KV F-22 JP Sobha Developers Feeder	0.000							1			5	5				7							5850

Sl. No.	Name of Division	Name of PSS	Name of Outgoing 11 kV Feeder	A	B	C=B-A	DISTRIBUTION TRANSFORMER DETAIL IN NOS.																		No. of HT Bulk	Total DTR Capacity in kVA (incl. Bulk)
				Initial Meter in LU Reading at 11 kV side PSS	Final Meter Reading in LU at 11 kV side PSS	Energy Consumption in LU (July 2013)	15 kVA	25 kVA	50 kVA	63 kVA	100 kVA	150 kVA	160 kVA	200 kVA	250 kVA	300 kVA	315 kVA	400 kVA	500 kVA	630 kVA	660 kVA	750 kVA	990 kVA	HT Load in kVA		
30	KML	RMZ	11 KV F1-Station Auxillary Feeder	1.782	1.796	0.014																				0
			11 KV F2 RMZ Feeder	1685.398	1692.884	7.486																		1700		1700
			11 KV F3 Bellandur Feeder (E)	963.696	973.856	10.160																				0
			11 KV F4 Kariyammana Agarahara	1187.210	1198.248	11.038				1	5				7				4					6050		10363
			11 KV F5 RMZ Feeder	457.174	464.102	6.928																		7200		7200
			11 KV F6 Solapuri Feeder (E)	859.396	873.582	14.186																				0
			11 KV F7 Green L/O Feeder (E)	429.090	436.314	7.224																				0
			11 KV F-18 Wipro Feeder	0.000	0.000	0.000																				0
			11 KV F8 Devarabisanahalli Feeder	1602.866	1634.342	31.476		3			9				2				1					6400		8375
			11 KV F9 RMZ Feeder	714.222	725.166	10.944																		6650		6650
			11 KV F10 Solapuria Soft Feeder	0.000	0.000	0.000																				0
			11 KV F11 RMZ Feeder	465.326	490.786	25.460																		3900		3900
			11 KV F12 Akme Project Feeder (E)	1029.888	1030.708	0.820																				0
			11 KV F13 Anupam Feeder (E)	503.856	510.952	7.096																				0
			11 KV F14 RMZ Feeder	891.974	900.346	8.372																		2000		2000
			11 KV F15 Total Feeder (E)	1064.936	1085.882	20.946																				0
			11 KV F16 Shoba Iris Feeder	771.888	785.032	13.144																		1950		1950
			11 KV F17 Shobha Feeder (E)	183.765	200.401	16.636																				0
31	KML	Import point from Hoody Stn.	11 KV F17 Feeder																					3450		3450
			11 KV F12 Feeder							11	47				45				7					600		20743
32	KML	NGV	11 KV F 1 Nethravathi Blk Feeder	53.571	55.583	2.012													6							3000
			11 KV F 2 Kumara Dhara, Simsha, Cauvery Blk Feeder	7.239	7.258	0.019													5							2500
			11 KV F 3 AVS Compound Feeder	861.642	879.254	17.612				3	16				27				5					7177		18216
			11 KV F 4 Godhavari Blk Feeder	66.670	68.914	2.244													5					500		3000
			11 KV F5 NGV Feeder (E)	769.414	778.028	8.614																				0
			11 KV F 6 Jakkasandra Feeder	541.548	550.158	8.610				3	12				15				2					3915		10054
			11 KV F13 Forum Feeder	435.718	435.718	0.000																				0
			11 KV F 7 Kapila Blk Feeder	142.988	144.879	1.891					1								6							3100
			11 KV F 8 Judicial Blk Feeder	47.887	49.541	1.654					1								7					270		3870
			11 KV F 9 Pranidaya Sanga Feeder	881.318	901.056	19.738				1	8				18				6					3600		11963
			11 KV F 10 8th Blk Feeder	428.190	434.634	6.444					13				15				5					2200		9750
			11 KV F 11 Kml Slum Feeder	902.476	915.620	13.144				2	13				16				2					2390		8816
			11 KV F 12 St Bed Feeder	250.098	265.946	15.848					4				4				1					5450		7350
33	KML	Import point from Shobha Stn., HSR Div.of South Circle	11 KV F10 Exora Business Park Feeder																							0
			11 KV F4 Cessna Garden B-5 Feeder																							0
			11 KV F9 Cessna Garden B-5 Feeder																							0
			11 KV F15 Vikas Telecom Feeder																							0

Sl. No.	Name of Division	Name of PSS	Name of Outgoing 11 kV Feeder	A	B	C=B-A	DISTRIBUTION TRANSFORMER DETAIL IN NOS.																		No. of HT Bulk	Total DTR Capacity in kVA (incl. Bulk)
				Initial Meter in LU Reading at 11 kV side PSS	Final Meter Reading in LU at 11 kV side PSS	Energy Consumption in LU (July 2013)	15 kVA	25 kVA	50 kVA	63 kVA	100 kVA	150 kVA	160 kVA	200 kVA	250 kVA	300 kVA	315 kVA	400 kVA	500 kVA	630 kVA	660 kVA	750 kVA	990 kVA	HT Load in kVA		
34	KML	St. John Wood	11 KV F1 Btm Tavarakere Feeder	232.596	346.090	113.494				1	6				7									1050		3463
			11 KV F 2 Majestic Appt. Tavarekere	580.386	589.714	9.328					4				6				4					150		4050
			11 KV F 3 Tavarekere Mn Road Feeder	230.601	236.523	5.922					3				7									550		2600
			11 KV F4 Btm Layout Feeder (ID)	0.020	0.230	0.210																				0
			11 KV F5 Stn Auxillary Feeder	0.509	0.531	0.022																				0
			11 KV F6 Idle Feeder (ID)	131.096	141.201	10.105																				0
			11 KV F 7 2nd Blk, Kml, St. John	1070.754	1078.758	8.004				1	4				10				3					1735		6198
			11 KV F 8 Tavarekere Feeder	283.444	302.690	19.246				1	20				24				4				1	1550		12603
			11 KV F 9 S G Palya Feeder	816.360	824.732	8.372				18	5				22				7					970		11604
			11 KV F 10 St. John Woods Appt Feeder	61.384	62.681	1.297					1								8							4100
			11 KV F 11 Oracle Express Feeder	287.694	290.484	2.790																		2140		2140
			11 KV F12 Feeder	2.746	4.932	2.186					4				13				1							4150
35	KML	Import point from Nimhans Stn., JND Div. of South Circle	11 KV F11 Feeder																							0
			11 KV F7-Drive in BTM Feeder																					6000		6000
			11 KV F8-Accenture Feeder																					4000		4000
			11 KV F12 Accenture Feeder																							0
36	KML	Import point from Adugodi Stn., JND Div. of South Circle	11 KV F6-Police Quarters Feeder								10				18				7					3250		12250
			11 KV F8-Kuduremukh Feeder								1													3350		3450
			11 KV F21-Oracle Feeder																					3000		3000
			11 KV F1-Old Madivala Feeder							5	15				30									2815		12130
			11 KV F18-IBM Feeder																					2900		2900
			11 KV F19-Idle Feeder																							0
			11 KV F22-St. John Woods - Idle Feeder																							0
			11 KV F27-East Land Holdings Feeder							5	10				13				2					1770		7335
			11 KV F11-Jyotinivas CollageFeeder							2	10				8				7				1	4601		12217
			11 KV F14-Kalyanamantapa Feeder								4				6				4					8642		12542
			11 KV F15-2N KML Feeder								4				8				4					675		5075
			11 KV F16-MICO KML Feeder																					2900		2900
			11 KV F23-Kudure mukh Feeder							2	7				14				4					2750		9076
			11 KV F24-Umaya Holdings Feeder												6									850		2350
			11 KV F25-TOTAL Feeder												1									3700		3950
			11 KV F26-Tepaoessae Feeder																					2000		2000
KML Division TOTAL						**1490.521**		**10**	**0**	**134**	**752**	**0**	**5**	**5**	**927**	**0**	**0**	**0**	**233**	**0**	**2**	**1**	**7**	**366801**	**0**	**809743**
37	HSR	Khodays Glass Factory	11 KV F1 Station Aux Feeder	1.487	1.497	0.011																				0
			11 KV F2 Avalahalli Feeder	401.274	406.071	4.797					8															800
			11 KV F3 Idle Feeder	0.000	0.000	0.000																				0
			11 KV F4 Srinidhi Layout Feeder	861.036	878.106	17.070				1	28				21				1							8613
			11 KV F-5 Glass Factory Feeder	220.663	222.766	2.103									1											250

Sl. No.	Name of Division	Name of PSS	Name of Outgoing 11 kV Feeder	A	B	C=B-A	DISTRIBUTION TRANSFORMER DETAIL IN NOS.																		No. of HT Bulk	Total DTR Capacity in kVA (incl. Bulk)
				Initial Meter in LU Reading at 11 kV side PSS	Final Meter Reading in LU at 11 kV side PSS	Energy Consumption in LU (July 2013)	15 kVA	25 kVA	50 kVA	63 kVA	100 kVA	150 kVA	160 kVA	200 kVA	250 kVA	300 kVA	315 kVA	400 kVA	500 kVA	630 kVA	660 kVA	750 kVA	990 kVA	HT Load in kVA		
			11 KV F6 Royal County Feeder	278.424	282.382	3.958					46					5										6100
			11 KV F7 Anjanadri Layout Feeder	100.368	101.379	1.011					11															1100
			11 KV F8 Idle Feeder	0.000	0.000	0.000																				0
			11 KV F9 Doddakalsandra Feeder	118.587	118.587	0.000				2	3				15				1							4676
			11 KV F10 Nandi Garden Feeder	204.936	206.289	1.353					12				2											1700
			11 KV F11 Bank Officers Colony Feeder	45.297	46.281	0.984					25															2500
			11 KV F12 City Corporation L/O Feeder	599.700	601.089	1.389					53															5300
			11 KV F13 Idle Feeder	0.000	0.000	0.000																				0
			11 KV F14 PNB Nagar Feeder	310.574	317.501	6.927				1	7				19											5513
			11 KV F16 B S K 6th Stage-2- Feeder	36.603	37.576	0.973					12															1200
			11 KV F15 Further Extended Bsk 6th	3.603	6.954	3.351					2								12							6200
38	HSR	Electronic City	11 KV F-1 Syscon Feeder	140.595	146.005	5.410					3				3											1050
			11 KV F-2 Konappana Agrahara Feeder	12.084	13.046	0.962					1													1220		1320
			11 KV F-4 Hebbagodi Feeder	271.160	275.885	4.725		25		6	16				3									500		3853
			11 KV F-5 Yokogova Feeder	0.000	0.000	0.000					2															200
			11 KV F-6 Wipro Ec2 Feeder (B)	1127.210	1137.225	10.016																				0
			11 KV F-7 Moog Control Feeder	338.651	345.423	6.773				2	2				2											826
			11 KV F-11 Veerasandra Feeder	558.066	563.990	5.923		13		4	20				15									1650		7977
			11 KV F-12(Stn Aux) Feeder	0.000	0.000	0.000																				0
			11 KV F-13 Surya Park Feeder	68.744	72.437	3.693		12		3	18													2500		4789
			11 KV F-3 Cyber Park Feeder (B)	267.290	276.914	9.624																				0
			11 KV F-8 Neeldriroad Feeder	113.532	120.970	7.439		2		2	28				16				8							10976
			11 KV F-9 Wipro Comp Feeder	13.782	15.590	1.808					4				3				2							2150
			11 KV F-10 Wipro Ec1 Feeder (B)	42.167	45.698	3.532																				0
			11 KV F-14 Infosys2 Feeder	143.264	146.268	3.004		10		16	25				22											9258
			11 KV F15 Arugani Feeder	245.092	247.139	2.047													10							5000
			11 KV F16velankini Feeder	0.000	0.000	0.000																				0
			11 KV F17 Wipro Ec4 Feeder	0.000	0.000	0.000																				0
			11 KV F18 Wipro Sez Feeder	0.000	0.000	0.000																				0
			11 KV F-19 Kssidc Feeder	0.000	0.000	0.000		13		1	13				6									2550		5738
			11 KV F-28 Gollahalli Feeder	29.073	38.651	9.578		14		5	4													85		1150
			11 KV F-20 Wipro Ec4 Feeder	41.834	54.170	12.336																		7000		7000
			11 KV F22 Feeder (ID)	4.173	6.074	1.901																				0
			11 KV F-21-Stpi Feeder	0.000	0.000	0.000																		5265		5265
			11 KV F-23 Wipro Sez Feeder	40.859	52.511	11.652																		7000		7000
			11 KV F-24 Telephone Exchange Feeder	13.854	16.154	2.300													8					5383		9383
			11 KV F-25 -HCL Feeder	539.087	543.906	4.819																		3000		3000
			11 KV F-26 Siemns Feeder	513.713	523.223	9.510																		2700		2700
			11 KV F-27 Symboisis Feeder	84.857	90.221	5.364																		2000		2000

Sl. No.	Name of Division	Name of PSS	Name of Outgoing 11 kV Feeder	A	B	C=B-A	DISTRIBUTION TRANSFORMER DETAIL IN NOS.																		No. of HT Bulk	Total DTR Capacity in kVA (incl. Bulk)
				Initial Meter in LU Reading at 11 kV side PSS	Final Meter Reading in LU at 11 kV side PSS	Energy Consumption in LU (July 2013)	15 kVA	25 kVA	50 kVA	63 kVA	100 kVA	150 kVA	160 kVA	200 kVA	250 kVA	300 kVA	315 kVA	400 kVA	500 kVA	630 kVA	660 kVA	750 kVA	990 kVA	HT Load in kVA		
39	HSR	Velankini	11 KV F1 Station Aux Feeder	2.604	2.634	0.030																				0
			11 KV F2-Salarpuria Feeder	336.339	341.811	5.472					1															100
			11 KV F3-Timkin Feeder	608.007	617.072	9.064																		2800		2800
			11 KV F-4 Hosur Main Road Feeder	700.709	716.259	15.551				2	11				7				3					2840		7316
			11 KV F-5 Hongasandra Feeder	671.586	686.736	15.150				1	13				13				2					2000		7613
			11 KV F11 Velankini Hotel Feeder	535.113	547.448	12.334																		4850		4850
			11 KV F6 Velankini Feeder	710.310	720.702	10.392																		4000		4000
			11 KV F7 BHEL Feeder	541.182	551.181	9.999		2			3				2				4					6140		8990
			11 KV F8 Doddathogur Feeder	589.014	601.049	12.035		2		6	39				20				4					565		11893
			11 KV F9 Virat Nagara Feeder	614.519	623.633	9.114				8	14				32				2					3865		14769
			11 KV F10 Viratnagara Bommanahalli	231.315	237.710	6.395				4	12				19				2							7202
			11 KV F12 Telephone Exchange Feeder	139.682	146.432	6.749				1	6															663
			11 KV F13 Feeder	0.000	0.000	0.000																				0
40	HSR	Import from Sulikunte Stn. of Rural Circle	11 KV F3 Agara Urban Feeder	0.000	0.000	0.000		13		2	32				19									472		8873
			11 KV F10 Wipro Feeder	0.000	0.000	0.000		3		5	47				18									659		10249
41	HSR	Malgudi	11 KV F1 Stn Aux. Feeder	1.274	1.293	0.020																				0
			11 KV F2 Tata BP Solar Feeder	577.787	588.935	11.148		1			27				13									1648		7623
			11 KV F3 Malgudi Feeder	81.846	83.586	1.740									2									938		1438
			11 KV F5 Doddangamangala Feeder	623.759	637.938	14.180					10													7500		8500
			11 KV F6 HPAlternate Source Feeder	1.173	1.173	0.000																				0
			11 KV F7 Satyam Feeder	480.108	485.471	5.363				1	1				1									3765		4178
			11 KV F8 Moog Control Feeder	242.466	246.846	4.380																		2665		2665
			11 KV F-9 Veerasandra Industrial Area	481.881	496.476	14.595																				0
			11 KV F-10 Ittina Feeder (E)	278.012	284.181	6.170																				0
			11 KV F-11 Veerasandra Industrial Area	128.418	135.380	6.962					3				2									510		1310
			11 KV F-12 Idle Feeder (ID)	9.452	10.925	1.473																				0
			11 KV F13 Global Tech Park Feeder	181.904	187.812	5.909																		3900		3900
42	HSR	Import from Sulikunte Stn. of Rural Circle	11 KV F-3 Kodichikkanahalli Feeder	0.000	0.000	0.000																				0
			11 KV F8-South City Feeder	0.000	0.000	0.000					1								6				2			5080
			11 KV F-9 Vijaya Bank Layout Feeder	0.000	0.000	0.000																				0
			11 KV F6-Kleen Pack Feeder	0.000	0.000	0.000								3									6	100		6640
			11 KV F10-Kottanur Feeder	0.000	0.000	0.000																				0
43	HSR	Naganathpura	11 KV F1-Chikkatogur Feeder	244.238	255.445	11.207				1	19				31				8					2321		16034
			11 KV F2-C.K Nagar Feeder	1024.623	1034.783	10.159					2				2									2265		2965
			11 KV F3- Singasandra Feeder	1049.879	1054.110	4.231					17				17				1					5284		11734
			11 KV F4-Meenakshi Layout Feeder	730.555	737.783	7.228				3	13				6									200		3189
			11 KV F5-Aecs Layout Feeder	8.021	15.639	7.618		1		2	8			1	36									3150		13301
			11 KV F6- Hongasandra Feeder	1224.937	1237.186	12.249				4	12			1	8				5					1399		7551
			11 KV F15-Total Mall Feeder	354.518	356.739	2.221					13				10									888.25		4688.25

Sl. No.	Name of Division	Name of PSS	Name of Outgoing 11 kV Feeder	A	B	C=B-A	DISTRIBUTION TRANSFORMER DETAIL IN NOS.																		No. of HT Bulk	Total DTR Capacity in kVA (incl. Bulk)
				Initial Meter in LU Reading at 11 kV side PSS	Final Meter Reading in LU at 11 kV side PSS	Energy Consumption in LU (July 2013)	15 kVA	25 kVA	50 kVA	63 kVA	100 kVA	150 kVA	160 kVA	200 kVA	250 kVA	300 kVA	315 kVA	400 kVA	500 kVA	630 kVA	660 kVA	750 kVA	990 kVA	HT Load in kVA		
			11 KV F8-Novel Feeder	166.415	176.276	9.861					18				26				2					2812		12112
			11 KV F9-Kudlu Feeder	168.137	177.164	9.027		1		4	24			1	12				1					6148		12525
			11 KV F10-Mico Bosch Feeder	192.338	205.454	13.116																		3600		3600
			11 KV F11-Pes Feeder	208.994	222.299	13.305				1	23				14									1772		7635
			11 KV F13-Aecs B Block Feeder	11.325	11.325	0.000				1	42			1	1				5					600		7813
			11 KV F14 Dodda Normangaa Feeder	67.800	67.800	0.000																				0
			11 KV F16-O Zone Feeder	0.000	0.000	0.000																		4000		4000
			11 KV F12 Station Aux Feeder	1.304	1.375	0.071																				0
44	HSR	Import from RMZ Stn. of KML Div.	11 KV F3 Bellandur Feeder	0.000	0.000	0.000					23			1	20									2699		10199
			11 KV F6 Solapuri Feeder	0.000	0.000	0.000				7									17					1199		10140
			11 KV F7 Green L/O Feeder	0.000	0.000	0.000				6	56				41				14					1013		24241
			11 KV F-18 Wipro Feeder	0.000	0.000	0.000																				0
			11 KV F10 Solapuria Soft Feeder	0.000	0.000	0.000									2				28					3060		17560
			11 KV F12 Akme Project Feeder	0.000	0.000	0.000				1	37				27				22					3022		24535
			11 KV F13 Anupam Feeder	0.000	0.000	0.000		3		3	25				15				24					689.1		19203.1
			11 KV F15 Total Feeder	0.000	0.000	0.000																		2324.75		2324.75
			11 KV F17 Shobha Feeder	0.000	0.000	0.000																		4000		4000
45	HSR	HSR	11 KV F1-Industrial Area Feeder	197.356	199.090	1.734				6	17				10				4					2100		8678
			11 KV F2-B. Halli Feeder	207.315	208.540	1.225				2	17			1	24				2					940		9966
			11 KV F3-HSR1st Sector Feeder	86.042	86.352	0.310		1			12				22									174		6899
			11 KV F4-HSR 2nd Sector Feeder	59.989	60.738	0.749				9	25				46				6					348.5		17915.5
			11 KV F9 CPWD Feeder	340.164	342.711	2.547				2	14				12				6							7526
			11 KV F12-Purvankara Feeder	21.780	22.443	0.663				1	1				2				2			1		375		2788
			11 KV F16- S.S.Palya Feeder	66.594	68.064	1.470		3		6	47				11				2					825		9728
			11 KV F17-Suncity Feeder	25.083	25.413	0.330		1																		25
			11 KV F18-27th Main, HSR Feeder	64.132	64.923	0.792				3	20		1	1	22				2					1319		10368
			11 KV F5-Somasundrapalya Feeder	128.651	129.820	1.170				5	55				24				14					1024		19839
			11 KV F6 Station Aux Feeder	6.550	6.562	0.013																				0
			11 KV F7-Jakkasandra Feeder	174.497	175.622	1.126				4	35				31									1619		13121
			11 KV F8-Kaikondrahalli Feeder	90.185	90.520	0.335		6		3	34				31				6					297.5		14786.5
			11 KV F10-Gold Hill Feeder	98.061	99.069	1.008				2	22			1	5				2					5845		10621
			11 KV F13-Venkatapura Feeder	46.781	47.780	0.999				4	35			1	49				4					127.5		18329.5
			11 KV F14-K.C.Halli Feeder	29.876	29.876	0.000					2				1									1099		1549
			11 KV F11-Raheja Residency Feeder	53.070	53.703	0.633					8				24				1					4500		11800
			11 KV F15-BDAComplex Feeder	101.790	118.303	16.513				18	56				89				7					1953		34437
46	HSR	L&T South	11 KV F1 Station Aux Feeder	0.139	0.227	0.088																				0
			11 KV F2 Block-1 To 8 Feeder	71.084	77.270	6.186								1					21							10700
			11 KV F3 Block C1 To C3 Feeder	13.829	16.137	2.309								3					9							5100
			11 KV F4 Idle Feeder	0.000	0.000	0.000																				0

Sl. No.	Name of Division	Name of PSS	Name of Outgoing 11 kV Feeder	A	B	C=B-A	DISTRIBUTION TRANSFORMER DETAIL IN NOS.																		No. of HT Bulk	Total DTR Capacity in kVA (incl. Bulk)
				Initial Meter in LU Reading at 11 kV side PSS	Final Meter Reading in LU at 11 kV side PSS	Energy Consumption in LU (July 2013)	15 kVA	25 kVA	50 kVA	63 kVA	100 kVA	150 kVA	160 kVA	200 kVA	250 kVA	300 kVA	315 kVA	400 kVA	500 kVA	630 kVA	660 kVA	750 kVA	990 kVA	HT Load in kVA		
			11 KV F5 Feeder	1.778	3.700	1.922																				0
			11 KV F6 Kammanahalli Feeder	237.444	245.695	8.251				1	20			14					10							9863
			11 KV F7 Shanthinikethan Feeder	282.027	289.631	7.604					11			13												3700
			11 KV F8 Doddamma L/O Feeder	295.401	305.737	10.337				6	13			22					7					2730		12308
			11 KV F9 B.K. Circle Feeder	32.286	35.381	3.095				1	16			15					10					1		9664
			11 KV F10 P.R. Nagar Feeder	260.670	272.942	12.272				3	9			1	13				1					210		5249
			11 KV F11 M.S.R. City Feeder	289.673	294.908	5.235				1	16			18										300		5563
			11 KV F12 Motappa Compound Feeder	7.690	11.849	4.159				1	11				15											4913
47	HSR	BTM 4th Stage	11 KV F1-Cavery Nagar Feeder	541.536	552.071	10.535					5			2	12				2					6285		11185
			11 KV F2-Hulimavu Feeder	312.102	318.794	6.691				2	9				16				2					1100		7126
			11 KV F3-Akshinagar Feeder	322.701	332.909	10.208					15				22				3							8500
			11 KV F4-Hongasandra Feeder	360.228	366.477	6.249				1	12				5											2513
			11 KV F5-Idle Feeder (ID)	0.000	0.000	0.000																				0
			11 KV F6-Viratnagara Feeder	138.887	150.455	11.568				5	23				19				2							8365
			11 KV F7-Kalena Agraha Feeder	208.322	215.654	7.332				3	38				9				1					2845		9584
			11 KV F-8-Arakere Bda Feeder	443.361	452.636	9.274				2	25	17			1									180		5606
			11 KV F-9-Nyanappana Halli Feeder	347.835	358.716	10.881				3	16				14				1					30		5819
			11 KV F-10-Sathyasai Bda Feeder	30.567	52.329	21.762				3	11				18				1							6289
			11 KV F-11-Kodichikkana Halli Feeder	430.721	440.805	10.085				3	6				41									432		11471
			11 KV F-12-Vijayabank Layout Feeder	458.535	466.325	7.789				3	19				43				1					990		14329
			11 KV F14- Aux Feeder	1.704	1.730	0.026																				0
			11 KV F-13-Vishwapriya Layout Feeder	389.967	398.199	8.232				3	8				11									1065		4804
48	HSR	Import from Golahalli	11 KV F1- Weavers Colony Feeder	0.000	0.000	0.000					13				10				1					100		4400
			11 KV F-2 Gottigere Feeder	0.000	0.000	0.000		3		3	52				57				4					705		22419
			11 KV F-10 Basavanapura Feeder	0.000	0.000	0.000					13				14											4800
			11 KV F-11 Poorvankara Feeder	0.000	0.000	0.000				3	20				16				13					290		12979
			11 KV F-4 Mylasandra Feeder	0.000	0.000	0.000		1		2	39				9				6					562		9863
49	HSR	Anjanapura	11 KV F1 Idle Feeder	0.000	0.000	0.000																				0
			11 KV F2 Little Care Feeder	21589.235	21600.575	11.340					1			12												2500
			11 KV F3 Idle Feeder	0.000	0.000	0.000																				0
			11 KV F4 8th Block Anjanapura Feeder	67.540	72.380	4.840					22			20	10				3					650		10850
			11 KV F5 Idle Feeder	0.000	0.000	0.000																				0
			11 KV F6 Purvankara Feeder	0.000	0.000	0.000													8							4000
			11 KV F7 Amruth Nagar Feeder	91256.235	91264.269	8.034					11			14										1341		5241
			11 KV F8 Yelethotadapalya Feeder	5157.894	5167.784	9.890					2			41										380		8780
			11 KV F9 BDA L/O 9th Phase Feeder	434.261	438.229	3.968								10												2000
			11 KV F10 Idle Feeder	0.000	0.000	0.000																				0
			11 KV F11 Kembathalli Feeder	5012.342	5021.235	8.893					1			41												8300
			11 KV F12 Auxuallry Feeder	0.000	0.000	0.000																				0

Sl. No.	Name of Division	Name of PSS	Name of Outgoing 11 kV Feeder	A	B	C=B-A	DISTRIBUTION TRANSFORMER DETAIL IN NOS.																		No. of HT Bulk	Total DTR Capacity in kVA (incl. Bulk)
				Initial Meter in LU Reading at 11 kV side PSS	Final Meter Reading in LU at 11 kV side PSS	Energy Consumption in LU (July 2013)	15 kVA	25 kVA	50 kVA	63 kVA	100 kVA	150 kVA	160 kVA	200 kVA	250 kVA	300 kVA	315 kVA	400 kVA	500 kVA	630 kVA	660 kVA	750 kVA	990 kVA	HT Load in kVA		
50	HSR	Import from Golahalli Stn. of Rural Circle	11 KV F12 Vijaya Bank Colony Feeder	0.000	0.000	0.000		1		2	7				9				18					1222		13323
51	HSR	Shobha	11 KV F10 Exora Business Park Feeder	271.029	294.035	23.006																				0
			11 KV F4 Cessna Garden B-5 Feeder (E)	66.588	77.771	11.183																				0
			11 KV F9 Cessna Garden B-5 Feeder (E)	135.831	150.345	14.514																				0
			11 KV F15 Vikas Telecom Feeder (E)	86.294	94.037	7.743																				0
			11 KV F6 Shobha Feeder	139.238	154.376	15.138									18											4500
			11 KV F7 Shobha Feeder	72.180	77.718	5.538					11				44				9							16600
			11 KV F11 Shobha Feeder	219.857	236.364	16.508									33											8250
			11 KV F12 Shobha Feeder	219.857	233.460	13.604									10											2500
52	HSR	Import from S Pura Stn. of JND Div.	11 KV F12 Feeder																							0
HSR Division Total						**818.754**	**0**	**131**	**0**	**222**	**1770**	**17**	**1**	**239**	**1416**	**5**	**0**	**0**	**383**	**0**	**0**	**1**	**8**	**186480.6**	**0**	**986921.6**
Banglore South Circle 11 kV side Input Energy						**4399.948**	**0**	**151**	**0**	**594**	**3754**	**17**	**7**	**423**	**4418**	**17**	**0**	**14**	**1012**	**1**	**2**	**24**	**41**	**636242**	**0**	**2820049**
Banglore South Circle 11 kV side Input Energy (Import from other Circle or Utility)						**606.752**																				
Banglore South Circle 11 kV side Input Energy (Export to other Circle or Utility)						**767.700**																				
Banglore South Circle net 11 kV side Input Energy						**4239.000**																				

\# B = Bulk
E = Export to othre Circle/ utility
ID = Idle (used for switching in case of Emergency)
WS = Water Supply

11 kV FEEDERS DETAIL
WITH DTR CAPACITY
OF
HUBLI CIRCLE
IN
KARNATAKA STATE

STUDY ON COMPONENT-WISE AT&C LOSSES ASSESSMENT FOR THE STATE OF KARNATAKA

A. 11 kV FEEDERS DETAIL WITH DTR CAPACITY OF HUBLI CIRCLE

Sl. No.	Name of PSS	Voltage Level	Power Transformer in nos.				PTR Capacity in MVA	Name of Outgoing 11 kV Feeder	A	B	C = B-A			DISTRIBUTION TRANSFORMER DETAIL IN NOS.																No. of Bulk	Total DTR Capacity on kVA (incl. Bulk)
			5 MVA	10 MVA	20 MVA	100 MVA			Initial Meter Reading in LU at 11 kV side of PSS	Final Meter Reading in LU at 11 kV side of PSS	Energy Consumption in LU (July'13)	10 KVA	15 KVA	25 KVA	50 KVA	63 KVA	100 KVA	150 KVA	160 KVA	200 KVA	250 KVA	300 KVA	315 KVA	400 KVA	500 KVA	630 KVA	750 KVA	990 KVA	HT Load in KVA		
DHARWAD DIVISION																															
1	UAS Dharwad	33/11KV	2				10	11 KV Agri Feeder - F1	343.097	346.466	3.368			6		12	13			1	2										2906
								11 KV Kila Feeder - F2	80.672	81.814	1.142			4		7	19				1										2691
								11 KV Pepsi Feeder - F3	672.802	685.457	12.655		2	6		10	40			1	8										7010
								11 KV Auxiliary Feeder - F4	74.340	76.752	2.412			29		16	9														2633
								11 KV KHB Feeder - F5	245.081	251.202	6.121			8		21	116				6										14623
								11 KV Power Grid Feeder - F6	2.230	2.272	0.042			3		3	2														464
								11 KV Basava Colony Feeder - F7	131.577	133.418	1.841			19		12	16														2831
								11 KV Narendra Feeder - F8	167.804	170.748	2.944		2	32		19	7														2727
Sub-Total (1)			**2**	**0**	**0**	**0**	**10**		**1717.604**	**1748.128**	**30.525**	**0**	**4**	**107**	**0**	**100**	**222**	**0**	**0**	**2**	**17**	**0**	**0**	**0**	**0**	**0**	**0**	**0**	**0**	**0**	35885
2	Uppin Betagiri	33/11KV	1				5	11 KV Lokur Feeder - F1	218.475	220.526	2.051			31		23	8														3024
								11 KV UPPIN Feeder - F2	131.694	133.103	1.409			29		8	7														1929
								11 KV Harubelawadie Feeder - F3	133.336	134.065	0.729			39		13	6														2394
								11 KV Yadawad Feeder - F4	266.371	267.898	1.526			23		6	9														1853
								11 KV Kotabadgi Feeder - F5	295.450	296.543	1.093			16		5	11														1815
								11 KV Kabbanuri Feeder - F6	211.430	212.981	1.551			15		4	7														1327
								11 KV Shibargatti Feeder - F7	259.980	262.996	3.016			13		8	13														2129
Sub-Total (2)			**1**	**0**	**0**	**0**	**5**		**1516.736**	**1528.111**	**11.375**	**0**	**0**	**166**	**0**	**67**	**61**	**0**	**0**	**0**	**0**	**0**	**0**	**0**	**0**	**0**	**0**	**0**	**0**	**14471**
3	Dummawad	33/11KV	2				10	11 KV Water Supply Feeder - F1	935.763	936.405	0.642		1	7		2														1	316
								11 KV Dummawad Feeder - F2	3039.000	3045.623	6.623		1	71		42	16														6036
								11 KV Yemmtti Feeder - F3	4042.390	4044.271	1.881			1		12	5													1	1281
								11 KV Gudihal Feeder - F4	298.181	300.233	2.052			1		13	7														1544
								11 KV Kanavihannour Feeder - F5	63.861	64.453	0.592		1	8		3														1	404
Sub-Total (3)			**2**	**0**	**0**	**0**	**10**		**8379.195**	**8390.985**	**11.790**	**0**	**3**	**88**	**0**	**72**	**28**	**0**	**0**	**0**	**0**	**0**	**0**	**0**	**0**	**0**	**0**	**0**	**3**	**9581**
4	Nigadi	33/11KV	2				10	11 KV Nigadi Feeder - F1	36.716	38.766	2.051	2		35		42	8														4341
								11 KV Ambli Coppa Feeder - F2	11.202	14.544	3.342			21		32	6														3141
								11 KV Devara Hubballi Feeder - F4	18.732	22.280	3.548	1		38		33	8														3839
Sub-Total (4)			**2**	**0**	**0**	**0**	**10**		**66.649**	**75.591**	**8.941**	**3**	**0**	**94**	**0**	**107**	**22**	**0**	**0**	**0**	**0**	**0**	**0**	**0**	**0**	**0**	**0**	**0**	**0**	**11321**
5	Alnavar	33/11 KV	2				10	11 KV Aravatagi Feeder - F1	324.120	326.873	2.753			12		19	11														2597
								11 KV Linganamath Feeder - F2	23.120	24.584	1.464			26		23	7														2799
								11 KV Kadabakatti Feeder - F3	765.450	767.325	1.875			29		16	8														2533
								11 KV Alnavar Feeder - F4	123.448	125.742	2.294			13		20	10														2585
								11 KV Bnachi Feeder - F5	128.760	131.031	2.271			26		21	17														3673
Sub-Total (5)			**2**	**0**	**0**	**0**	**10**		**1364.898**	**1375.555**	**10.657**	**0**	**0**	**106**	**0**	**99**	**53**	**0**	**0**	**0**	**0**	**0**	**0**	**0**	**0**	**0**	**0**	**0**	**0**	**14187**
6	Aravatigi	33/11 KV	1				5	11 KV Honnapur Feeder - F1	46.126	48.259	2.132			19		31	12														3628
								11 KV Kumbarkoppa Feeder - F2	48.326	50.110	1.783			25		17	11														2796
Sub-Total (6)			**1**	**0**	**0**	**0**	**5**		**94.452**	**98.368**	**3.916**	**0**	**0**	**44**	**0**	**48**	**23**	**0**	**0**	**0**	**0**	**0**	**0**	**0**	**0**	**0**	**0**	**0**	**0**	**6424**

Sl. No.	Name of PSS	Voltage Level	Power Transformer in nos.				PTR Capacity in MVA	Name of Outgoing 11 kV Feeder	A	B	C = B-A			DISTRIBUTION TRANSFORMER DETAIL IN NOS.																No. of Bulk	Total DTR Capacity on kVA (incl. Bulk)
			5 MVA	10 MVA	20 MVA	100 MVA			Initial Meter Reading in LU at 11 kV side of PSS	Final Meter Reading in LU at 11 kV side of PSS	Energy Consumption in LU (July'13)	10 KVA	15 KVA	25 KVA	50 KVA	63 KVA	100 KVA	150 KVA	160 KVA	200 KVA	250 KVA	300 KVA	315 KVA	400 KVA	500 KVA	630 KVA	750 KVA	990 KVA	HT Load in KVA		
7	Kalaghatagi	33/11KV	2				10	Kalaghatagi F5	219.909	225.493	5.584			12		9	16				4									3467
								T.Honnalli F-2	169.378	170.026	0.648			40		34	9													4042
								Devikoppa F-3	211.700	215.949	4.249		2	49		47	14													5616
								Belavntar F-4	241.244	244.596	3.352		8	65		41	11													5428
								Malakankoppa	182.908	185.306	2.398		12	42		38	9													4524
								Bommigatti F-6	200.048	202.152	2.104		4	46		46	8													4908
								Ramnal	68.466	69.368	0.902		14	16		10	3													1540
								Hirehonnalli(F-12)	54.368	55.565	1.197		2	15		28	7													2869
								Tumarikoppa (KDL)	259.732	262.024	2.292		44	60		28	8													4724
								Benchikeri F14	12.606	12.839	0.233					1	2													263
Sub-Total (7)			**2**	**0**	**0**	**0**	**10**		**1620.359**	**1643.318**	**22.959**	**0**	**86**	**345**	**0**	**282**	**87**	**0**	**0**	**0**	**4**	**0**	**0**	**0**	**0**	**0**	**0**	**0**	**0**	**0**	**37381**
8	Nigadi	33/11KV	2				10	Nigadi	36.714	38.766	2.052		2	35		42	8													4351
								DevarHubblli	18.730	22.294	3.564		1	38		33	8													3844
								Amblikoppa	11.202	14.544	3.342			21		32	6													3141
Sub-Total (8)			**2**	**0**	**0**	**0**	**10**		**66.646**	**75.604**	**8.958**	**0**	**3**	**94**	**0**	**107**	**22**	**0**	**0**	**0**	**0**	**0**	**0**	**0**	**0**	**0**	**0**	**0**	**0**	**11336**
Dharwad Div. 33/11 kV - [Sub-Total (1) to (8)]			**14**	**0**	**0**	**0**	**70**	**0**	**14826.539**	**14935.660**	**109.121**	**3**	**96**	**1044**	**0**	**882**	**518**	**0**	**0**	**2**	**21**	**0**	**0**	**0**	**0**	**0**	**0**	**0**	**0**	**3**	**140586**
9	KUD	110/11KV		2			20	Mugad	279.478	282.970	3.492			36		66	13													6358
								Salkinkoppa	321.700	322.036	0.336			27		11	10													2368
								Basaweshwar	592.708	602.853	10.145			1		19	63				7									9272
								KCD	478.784	486.379	7.595			3		24	43			1	2									6587
								Pavatenagar	159.242	161.576	2.334			2		7	15				1									2241
								Jayanagar	683.895	695.539	11.644			7		29	70				8									11002
								Navodayanagar	36.423	38.452	2.029			1		2	2													351
								Sadhanakeri	192.104	196.418	4.314			5		5	31				1									3790
Sub-Total (9)			**0**	**2**	**0**	**0**	**20**		**2744.334**	**2786.223**	**41.889**	**0**	**0**	**82**	**0**	**163**	**247**	**0**	**0**	**1**	**19**	**0**	**0**	**0**	**0**	**0**	**0**	**0**	**0**	**0**	**41969**
10	Belur	110/11KV		2	1		40	BELUR I.A.	661.930	672.671	10.741			6		3	11	0												1439
								MADANBAVI	573.838	576.248	2.410		1	32		21	13													3438
								TINNA	1328.802	1341.848	13.046			1		2	5													651
								PRAJAVANI	704.221	711.354	7.133			1		3	9				2									1614
								MANDIHAL-F-4	311.304	313.946	2.642			36		13	11													2819
								GARAG	485.466	489.525	4.059		1	63		62	21													7596
								TEGUR	4.691	7.413	2.722			46		38	12													4744
								TELCO	355.522	359.011	3.489			11		6	11													1753
								HIGHCOURT	18.628	19.134	0.506						2				2									700
								MODEL BUCKET	495.878	505.544	9.666					1	4													463
Sub-Total (10)			**0**	**2**	**1**	**0**	**40**		**4940.279**	**4996.694**	**56.415**	**0**	**2**	**196**	**0**	**149**	**99**	**0**	**0**	**0**	**4**	**0**	**0**	**0**	**0**	**0**	**0**	**0**	**0**	**0**	**25217**

Sl. No.	Name of PSS	Voltage Level	Power Transformer in nos.				PTR Capacity in MVA	Name of Outgoing 11 kV Feeder	A	B	C = B-A			DISTRIBUTION TRANSFORMER DETAIL IN NOS.																No. of Bulk	Total DTR Capacity on kVA (incl. Bulk)
			5 MVA	10 MVA	20 MVA	100 MVA			Initial Meter Reading in LU at 11 kV side of PSS	Final Meter Reading in LU at 11 kV side of PSS	Energy Consumption in LU (July'13)	10 KVA	15 KVA	25 KVA	50 KVA	63 KVA	100 KVA	150 KVA	160 KVA	200 KVA	250 KVA	300 KVA	315 KVA	400 KVA	500 KVA	630 KVA	750 KVA	990 KVA	HT Load in KVA		
11	Lakamanahalli	110/11KV		3	1		50	HEBBALLI	1272.378	1272.714	0.336			38		29	11														3877
								Navalur	738.630	741.987	3.357			15		3	17														2264
								Someshwar	921.243	927.746	6.503			3		14	94				2										10857
								K.M.P	1060.788	1065.599	4.810					4	7				5								1500		3702
								U.A.S	775.896	781.272	5.376					17	17				1										3021
								(Vidyaranya) JSS	920.664	923.190	2.526			8		19	47				7										7847
								Express	1968.760	1977.561	8.801					15	51														6045
								Venkateshwar (M.K)	1855.419	1863.504	8.085					13	51				6										7419
								Garden Polymer(HT Bulk)	125.139	133.872	8.733						1														100
								Madarmaddi	1135.230	1145.190	9.960			2		7	35				5										5241
Sub-Total (11)			**0**	**3**	**1**	**0**	**50**		**10774.147**	**10832.634**	**58.487**	**0**	**0**	**66**	**0**	**121**	**331**	**0**	**0**	**0**	**26**	**0**	**0**	**0**	**0**	**0**	**0**	**0**	**1500**	**0**	**50373**
12	Mruthyunjay Nagar	110/11KV		2	1		40	Murghamath F-11	319.989	325.049	5.060			2		3	20				1										2489
								Vidyaranya F-9	357.650	366.507	8.857			8		17	29														4171
								Kalabhavan F-12	320.682	324.761	4.079			2		4	26				2										3402
								Kamalapur F-8	10.109	11.161	1.052			13		12	8														1881
								Kavalgeri	0.908	2.353	1.445			39		37	13														4606
								Amminbhavi	43.724	44.550	0.826			29		16	6														2333
								Marewad Ginning(HT Bulk)	43.724	44.550	0.826										1										250
								Mangalgatti	70.923	72.465	1.542			23		17	5														2146
Sub-Total (12)			**0**	**2**	**1**	**0**	**40**		**1167.709**	**1191.396**	**23.687**	**0**	**0**	**116**	**0**	**106**	**107**	**0**	**0**	**0**	**4**	**0**	**0**	**0**	**0**	**0**	**0**	**0**	**0**	**0**	**21278**
13	Ramanakoppa	110/11KV		1			10	(Ramanakoppa) F-2 Varur 083	109.129	110.028	0.899			9		6	1														703
								IE (Chabbi)	115.219	119.049	3.830	5	4	19		14	8														2267
Sub-Total (13)			**0**	**1**	**0**	**0**	**10**		**224.348**	**229.077**	**4.729**	**5**	**4**	**28**	**0**	**20**	**9**	**0**	**0**	**0**	**0**	**0**	**0**	**0**	**0**	**0**	**0**	**0**	**0**	**0**	**2970**
14	Kadanakoppa	110/11KV		1	1		30	Kuravinkoppa	200.890	202.184	1.294			29	1	17	9														2746
								Ugnikeri F2	146.592	148.461	1.869		11	19		23	15														3589
								Naganoor	83.386	255.364	171.978		1	38		25	7														3240
								AVM Grinites F4	209.368	209.542	0.174			12		8	3				1										1354
								Chelmatti F5	198.560	201.076	2.516			16		10	15														2530
Sub-Total (14)			**0**	**1**	**1**	**0**	**30**		**838.796**	**1016.627**	**177.831**	**0**	**12**	**114**	**1**	**83**	**49**	**0**	**0**	**0**	**1**	**0**	**0**	**0**	**0**	**0**	**0**	**0**	**0**	**0**	**13459**
15	Kavalawad	110/11KV						Kudalagi	100.734	102.286	1.552		30	42		21	2														3023
Sub-Total (15)			**0**	**0**	**0**	**0**	**0**		**100.734**	**102.286**	**1.552**	**0**	**30**	**42**	**0**	**21**	**2**	**0**	**0**	**0**	**0**	**0**	**0**	**0**	**0**	**0**	**0**	**0**	**0**	**0**	**3023**
16	Tadasinakoppa	110/11KV		1			10	AIR, 11KV F1	444.597	449.501	4.904			1		10	70				3				1						8905
								SDM	653.443	663.090	9.647			3		12	53			1	3								1300		8381
								K.H.B. + Kariyamma	15.221	15.539	0.318			5		9	47														5392
								Tadasinkoppa	262.651	263.578	0.927			15		6	2														953
Sub-Total (16)			**0**	**1**	**0**	**0**	**10**		**1375.912**	**1391.708**	**15.796**	**0**	**0**	**24**	**0**	**37**	**172**	**0**	**0**	**1**	**6**	**0**	**0**	**0**	**1**	**0**	**0**	**0**	**1300**	**0**	**23631**
Dharwad Div. 110/ 11 kV Total - [Sub-Total (9) to (16)]			**0**	**12**	**4**	**0**	**200**		**22166.260**	**22546.646**	**380.386**	**5**	**48**	**668**	**1**	**700**	**1016**	**0**	**0**	**2**	**60**	**0**	**0**	**0**	**1**	**0**	**0**	**0**	**2800**	**0**	**181920**
Dharwad Division - Grand Total			**14**	**12**	**4**	**0**	**270**		**36992.799**	**37482.306**	**489.507**	**8**	**144**	**1712**	**1**	**1582**	**1534**	**0**	**0**	**4**	**81**	**0**	**0**	**0**	**1**	**0**	**0**	**0**	**2800**	**3**	**322506**

Sl. No.	Name of PSS	Voltage Level	Power Transformer in nos.				PTR Capacity in MVA	Name of Outgoing 11 kV Feeder	A	B	C = B-A			DISTRIBUTION TRANSFORMER DETAIL IN NOS.																No. of Bulk	Total DTR Capacity on kVA (incl. Bulk)
			5 MVA	10 MVA	20 MVA	100 MVA			Initial Meter Reading in LU at 11 kV side of PSS	Final Meter Reading in LU at 11 kV side of PSS	Energy Consumption in LU (July'13)	10 KVA	15 KVA	25 KVA	50 KVA	63 KVA	100 KVA	150 KVA	160 KVA	200 KVA	250 KVA	300 KVA	315 KVA	400 KVA	500 KVA	630 KVA	750 KVA	990 KVA	HT Load in KVA		
G DIVISION																															
1	SHINGATALUR	33/11 KV	2				10	11 KV Hamagi Feeder - F1	386.103	387.660	1.557			18		24	9														2862
								11 KV Bidarahalli Feeder - F2	852.270	853.293	1.023			35		29	17														4402
								11 KV Shingatalur Feeder - F3	476.138	476.914	0.776			14		14	11														2332
								11 KV Gangapur Feeder - F4	613.968	616.739	2.771			34		30	11														3840
Sub-Total (1)			**2**	**0**	**0**	**0**	**10**		**2328.479**	**2334.606**	**6.127**	**0**	**0**	**101**	**0**	**97**	**48**	**0**	**0**	**0**	**0**	**0**	**0**	**0**	**0**	**0**	**0**	**0**	**0**	**0**	**13436**
2	HOLEALUR	33/11 KV	1				5	11 KV Holealur Feeder - F1	118.440	121.116	2.676			9		6	8				1										1653
								11 KV Amargol Feeder - F2	136.020	136.952	0.932			22		15	3														1795
								11 KV Asuti Feeder - F3	84.800	85.990	1.190			29		21	6														2648
								11 KV Menasagi Feeder - F4	179.120	181.734	2.614			16		27	6														2701
Sub-Total (2)			**1**	**0**	**0**	**0**	**5**		**518.380**	**525.792**	**7.412**	**0**	**0**	**76**	**0**	**69**	**23**	**0**	**0**	**0**	**1**	**0**	**0**	**0**	**0**	**0**	**0**	**0**	**0**	**0**	**8797**
3	HULAKOTI	33/11 KV	2				10	11 KV FCSM Feeder - F1	661.604	667.112	5.508			2		2	2														376
								11 KV GCPM Feeder - F2	483.345	487.740	4.395			14		20	17				2										3810
								11 KV Hulakoti Feeder - F3	171.278	173.250	1.972			7		3	9														1264
								11 KV Asundi Feeder - F4	600.440	601.646	1.206			28		12	5				1										2206
								11 KV Kurthakodi Feeder - F5	135.190	137.702	2.512			78		33	10														5029
								11 KV Venkateshwara Nagar Feeder - F6	147.290	149.121	1.831			24		35	15				1										4555
Sub-Total (3)			**2**	**0**	**0**	**0**	**10**		**2199.147**	**2216.571**	**17.424**	**0**	**0**	**153**	**0**	**105**	**58**	**0**	**0**	**0**	**4**	**0**	**0**	**0**	**0**	**0**	**0**	**0**	**0**	**0**	**17240**
4	HOLE ITAGI	33/11 KV	2				10	11 KV Hebbal Feeder - F1	6.720	8.827	2.107			14		2	9														1376
								11 KV Holeitagi Feeder - F3	70.166	72.268	2.102			18		15	10														2395
								11 KV Tangod Feeder - F4	8.872	9.544	0.672			4		11	5														1293
Sub-Total (4)			**2**	**0**	**0**	**0**	**10**		**85.758**	**90.639**	**4.881**	**0**	**0**	**36**	**0**	**28**	**24**	**0**	**0**	**0**	**0**	**0**	**0**	**0**	**0**	**0**	**0**	**0**	**0**	**0**	**5064**
5	SURANAGI	33/11 KV	2				10	11 KV Bhalehosur Feeder - F1	125.270	127.271	2.001			6		14	7														1732
								11 KV Suganagi Feeder - F2	126.799	126.909	0.110			5		2	11														1351
								11 KV Yellapur Feeder - F3	121.125	123.863	2.738			11		3	13														1764
								11 KV Doddur Feeder - F4	28.956	30.151	1.195			27		10	7														2005
Sub-Total (5)			**2**	**0**	**0**	**0**	**10**		**402.150**	**408.193**	**6.043**	**0**	**0**	**49**	**0**	**29**	**38**	**0**	**0**	**0**	**0**	**0**	**0**	**0**	**0**	**0**	**0**	**0**	**0**	**0**	**6852**
6	MUSHIGERI	33/11 KV	1				5	11 KV Sarjapur Feeder - F1	401.840	403.511	1.671			22		11	12														2443
								11 KV Nagendragada Feeder - F2	474.820	477.906	3.086			23		27	10														3276
								11 KV Itagi Feeder - F3	388.100	388.684	0.584			26		18	10														2784
								11 KV Hireyalgundi Feeder - F4	344.420	345.272	0.852			9		15	8														1970
Sub-Total (6)			**1**	**0**	**0**	**0**	**5**		**1609.180**	**1615.373**	**6.193**	**0**	**0**	**80**	**0**	**71**	**40**	**0**	**0**	**0**	**0**	**0**	**0**	**0**	**0**	**0**	**0**	**0**	**0**	**0**	**10473**
Gadag Division 33/11 kV Total [Sub-Total (1) to 6)]			**10**	**0**	**0**	**0**	**50**		**7143.094**	**7191.174**	**48.080**	**0**	**0**	**495**	**0**	**399**	**231**	**0**	**0**	**0**	**5**	**0**	**0**	**0**	**0**	**0**	**0**	**0**	**0**	**0**	**61862**
7	Gadag	110/11KV		4			40	Adarsh Nagar	199.064	205.741	6.677			6		6	38				7										6078
								Trikuteshwar	421.400	427.930	6.530			1		1	22				13										5538
								Anand Ashram	457.858	460.744	2.886			3		3	10				4										2264
								Industrial (F7)	342.600	344.326	1.726			1		2	6				8										2751
								Veernarayan(U)	288.793	299.888	11.095			2		5	13				16	1								5965
								Old Betageri(F10)	760.050	762.896	2.846			4		2	23				9									4776
								Mulgund	203.725	208.814	5.089			47		19	164													18772
								KSRTC Colony	892.746	893.020	0.274			1		1	10													1088
								Beldhadi	123.529	125.321	1.792			45		22	8													3311
								Harthi	899.820	902.038	2.218			81		37	15													5856
Sub-Total (7)			**0**	**4**	**0**	**0**	**40**		**4589.585**	**4630.718**	**41.133**	**0**	**0**	**191**	**0**	**98**	**309**	**0**	**0**	**0**	**57**	**1**	**0**	**0**	**0**	**0**	**0**	**0**	**0**	**0**	**56399**

Sl. No.	Name of PSS	Voltage Level	Power Transformer in nos.				PTR Capacity in MVA	Name of Outgoing 11 kV Feeder	A	B	C = B-A			DISTRIBUTION TRANSFORMER DETAIL IN NOS.																No. of Bulk	Total DTR Capacity on kVA (incl. Bulk)
			5 MVA	10 MVA	20 MVA	100 MVA			Initial Meter Reading in LU at 11 kV side of PSS	Final Meter Reading in LU at 11 kV side of PSS	Energy Consumption in LU (July'13)	10 KVA	15 KVA	25 KVA	50 KVA	63 KVA	100 KVA	150 KVA	160 KVA	200 KVA	250 KVA	300 KVA	315 KVA	400 KVA	500 KVA	630 KVA	750 KVA	990 KVA	HT Load in KVA		
8	Sambhapur	110/11KV						Panchaxari Nagar	81.640	89.111	7.471			2		3	34				13										6889
								R.G. Nagar	104.226	110.194	5.968			3		5	46				13										8240
Sub-Total (8)			**0**	**0**	**0**	**0**	**0**		**185.866**	**199.305**	**13.439**	**0**	**0**	**5**	**0**	**8**	**80**	**0**	**0**	**0**	**26**	**0**	**0**	**0**	**0**	**0**	**0**	**0**	**0**	**0**	**15129**
9	Betageri	110/11KV		1			10	Betageri	613.860	620.092	6.232					4	31				5										4602
								Krishna Nagar	524.628	529.640	5.012			3		2	29				8										5101
								Narasapur	307.380	311.330	3.950			9		7	15				6										3666
								Hombal	207.382	209.100	1.718			52		20	8														3360
								Balaganur	340.420	342.414	1.994			47		15	6														2720
								Kanaginhal	256.980	258.290	1.310			40		20	3														2560
Sub-Total (9)			**0**	**1**	**0**	**0**	**10**		**2250.650**	**2270.866**	**20.216**	**0**	**0**	**151**	**0**	**68**	**92**	**0**	**0**	**0**	**19**	**0**	**0**	**0**	**0**	**0**	**0**	**0**	**0**	**0**	**22009**
10	Gajendragad	110/11KV		1	1		30	Gajendragad	1090.760	1102.450	11.690			22		28	37			2	3										7164
								Dindur	532.888	555.260	22.372			8		9	8														1567
								Rajur	25.158	26.200	1.042			17		12	11														2281
								Benasamatti	272.730	277.898	5.168		1	16		24	14														3327
								Hirekoppa	282.478	284.730	2.252			18		14	7														2032
								Bairapur	106.982	109.274	2.292			14		15	8														2095
Sub-Total (10)			**0**	**1**	**1**	**0**	**30**		**2310.996**	**2355.812**	**44.816**	**0**	**1**	**95**	**0**	**102**	**85**	**0**	**0**	**2**	**3**	**0**	**0**	**0**	**0**	**0**	**0**	**0**	**0**	**0**	**18466**
11	Naragund	110/11KV		2			20	Naragund	1.385	9.768	8.382			9		15	31				2										4770
								Navalgund	187.888	189.167	1.279			45		29	8														3752
								Sureban	126.010	132.762	6.752			47		20	4														2835
								Hadli	239.911	240.932	1.021			22		17	6														2221
								P.B.Factory(HT Bulk)	8.716	8.986	0.270																		250		250
Sub-Total (11)			**0**	**2**	**0**	**0**	**20**		**563.910**	**581.614**	**17.704**	**0**	**0**	**123**	**0**	**81**	**49**	**0**	**0**	**0**	**2**	**0**	**0**	**0**	**0**	**0**	**0**	**0**	**250**	**0**	**13828**
12	Naregal	110/11KV			1		20	Naregal	332.880	335.745	2.865			5		8	8				2										1929
								Halakeri	137.055	138.168	1.113			13		8	2														1029
								Sudi	913.320	915.231	1.911			34		36	12				1										4568
								Balangur	3129.455	3131.129	1.674			8		6	2														778
								Abbigeri	439.114	443.340	4.226		1	42		21	10														3388
Sub-Total (12)			**0**	**0**	**1**	**0**	**20**		**4951.824**	**4963.613**	**11.789**	**0**	**1**	**102**	**0**	**79**	**34**	**0**	**0**	**0**	**3**	**0**	**0**	**0**	**0**	**0**	**0**	**0**	**0**	**0**	**11692**
13	Ron	110/11 KV		1	1		30	Ron	2921.910	2928.321	6.411			6		12	12				3										2856
								Ron Water Supply	99.265	103.646	4.381			13		10	4														1355
								Savadi	264.195	265.024	0.829			26		17	3														2021
								Hullur	190.821	191.501	0.680			28		26	2														2538
								Belvanaki	414.280	416.026	1.746			39		23	9														3324
								Bevinakatti	288.825	290.620	1.795			41		26	7														3363
								Hosalli/Jigalur	35.055	35.585	0.530			12		2	4														826
Sub-Total (13)			**0**	**1**	**1**	**0**	**30**		**4214.351**	**4230.724**	**16.373**	**0**	**0**	**165**	**0**	**116**	**41**	**0**	**0**	**0**	**3**	**0**	**0**	**0**	**0**	**0**	**0**	**0**	**0**	**0**	**16283**
14	Laxmeshwar	110/11KV		2			20	Laxmeshwar (Town)	545.265	552.858	7.593			11		3	27														3164
								Laxmeshwar Micro	80.694	81.859	1.165			5		6	3														803
								Shigli	185.890	188.571	2.681			15		9	8														1742
								P.Badni	326.339	329.018	2.679			7		8	13														1979

Sl. No.	Name of PSS	Voltage Level	Power Transformer in nos.				PTR Capacity in MVA	Name of Outgoing 11 kV Feeder	A	B	C = B-A			DISTRIBUTION TRANSFORMER DETAIL IN NOS.																No. of Bulk	Total DTR Capacity on kVA (incl. Bulk)
			5 MVA	10 MVA	20 MVA	100 MVA			Initial Meter Reading in LU at 11 kV side of PSS	Final Meter Reading in LU at 11 kV side of PSS	Energy Consumption in LU (July'13)	10 KVA	15 KVA	25 KVA	50 KVA	63 KVA	100 KVA	150 KVA	160 KVA	200 KVA	250 KVA	300 KVA	315 KVA	400 KVA	500 KVA	630 KVA	750 KVA	990 KVA	HT Load in KVA		
								Gudageri	300.502	303.210	2.708			17		3	5														1114
								Gonal	120.628	121.715	1.087			12		7	4														1141
								Huvinashgli	425.815	428.000	2.185			13		8	11														1929
								Haradagatti	338.091	339.875	1.784			16		3	7														1289
Sub-Total (14)			**0**	**2**	**0**	**0**	**20**		**2323.224**	**2345.106**	**21.882**	**0**	**0**	**96**	**0**	**47**	**78**	**0**	**0**	**0**	**0**	**0**	**0**	**0**	**0**	**0**	**0**	**0**	**0**	**13161**
15	Mundargi	110/11KV		1	1		30	Mundargi	434.847	441.062	6.215			26		23	33				2										5899
								Mundargi Water supply	346.292	349.099	2.807			1															1	25
								Mundaragi IP Set (Hesarur)	81.023	83.880	2.857			5		4	15													1877
								Kalakeri	124.612	126.288	1.676			11		7	9														1616
								Mevundi	427.053	428.986	1.933			9		14	12														2307
								Kakkur	390.533	394.599	4.066			8		9	19				1										2917
								Bagewadi	430.824	434.150	3.326			18		9	11														2117
								Korlahalli	255.990	257.983	1.993			40		16	7														2708
								Bardur	363.962	365.160	1.198			29		12	8														2281
Sub-Total (15)			**0**	**1**	**1**	**0**	**30**		**2855.136**	**2881.207**	**26.071**	**0**	**0**	**147**	**0**	**94**	**114**	**0**	**0**	**0**	**3**	**0**	**0**	**0**	**0**	**0**	**0**	**0**	**0**	**1**	**21747**
16	Bellatti	110/11KV		2	1		40	Urban W/S(HT Bulk)	6238.922	6241.703	2.781						2												500	1	700
								Shirhatti	195.489	199.775	4.286			8		11	13														2193
								Bellatti	549.864	553.476	3.612			11		8	17														2479
								Hole-Itagi	171.278	172.250	0.972			4		6	7														1178
								Hebbal	264.052	265.974	1.922			7		9	2														942
								Konchigeri	230.164	231.626	1.462			8		3	5														889
								F-3 Surangi	267.890	268.982	1.092			6		9	4														1117
								Devihal	249.282	251.234	1.952			8		2	1														426
Sub-Total (16)			**0**	**2**	**1**	**0**	**40**		**8166.941**	**8185.020**	**18.079**	**0**	**0**	**52**	**0**	**48**	**51**	**0**	**0**	**0**	**0**	**0**	**0**	**0**	**0**	**0**	**0**	**500**	**1**	**9924**
17	Dambal	110/11KV		2			20	Dambal	366.114	374.754	8.640			26		33	9														3629
								Hirewaddatti	292.642	294.623	1.981			16		19	4														1997
								Doni	290.704	293.096	2.392			29		28	5														2989
								Kadampur	135.455	137.420	1.965			15		19	4														1972
								Petalur	11.750	15.445	3.696			42		25	10														3625
Sub-Total (17)			**0**	**2**	**0**	**0**	**20**		**1096.664**	**1115.338**	**18.674**	**0**	**0**	**128**	**0**	**124**	**32**	**0**	**0**	**0**	**0**	**0**	**0**	**0**	**0**	**0**	**0**	**0**	**0**	**14212**
18	Hirehal	110/11KV		1			10	Hirehal W/s	19.120	20.047	0.927			4		3	5														789
								Hirehal	25.460	26.344	0.884			9		7	3														966
								Nainapur	17.772	18.371	0.599			12		4	3														852
								Kotabal	13.006	13.698	0.692			18		11	3														1443
								Balagod	11.856	12.430	0.574			9		10	4														1255
Sub-Total (18)			**0**	**1**	**0**	**0**	**10**		**87.214**	**90.890**	**3.676**	**0**	**0**	**52**	**0**	**35**	**18**	**0**	**0**	**0**	**0**	**0**	**0**	**0**	**0**	**0**	**0**	**0**	**0**	**5305**
19	Shirahatti	33/11KV	1				5	Magadi	127.548	129.538	1.990			11		8	12														1979
								Chabbi	28.081	29.768	1.687	34				30	7														2930
								Kadakol	140.828	142.972	2.144			23		17	21														3746
Sub-Total (19)			**1**	**0**	**0**	**0**	**5**		**296.457**	**302.278**	**5.821**	**34**	**0**	**34**	**0**	**55**	**40**	**0**	**0**	**0**	**0**	**0**	**0**	**0**	**0**	**0**	**0**	**0**	**0**	**8655**

Sl. No.	Name of PSS	Voltage Level	Power Transformer in nos.				PTR Capacity in MVA	Name of Outgoing 11 kV Feeder	A	B	C = B-A			DISTRIBUTION TRANSFORMER DETAIL IN NOS.																No. of Bulk	Total DTR Capacity on kVA (incl. Bulk)
			5 MVA	10 MVA	20 MVA	100 MVA			Initial Meter Reading in LU at 11 kV side of PSS	Final Meter Reading in LU at 11 kV side of PSS	Energy Consumption in LU (July'13)	10 KVA	15 KVA	25 KVA	50 KVA	63 KVA	100 KVA	150 KVA	160 KVA	200 KVA	250 KVA	300 KVA	315 KVA	400 KVA	500 KVA	630 KVA	750 KVA	990 KVA	HT Load in KVA		
20	Konnur	110/11KV		1	1		30	Konnur	289.872	293.520	3.648			46		22	11														3636
								Shirol	335.820	338.192	2.372			48		21	11														3623
Sub-Total (20)			**1**	**0**	**0**	**0**	**5**		**625.692**	**631.712**	**6.020**	**0**	**0**	**94**	**0**	**43**	**22**	**0**	**0**	**0**	**0**	**0**	**0**	**0**	**0**	**0**	**0**	**0**	**0**	**7259**
Gadag Div. 110/11 KV - Total [Sub-Total (7) to (20)]			**2**	**17**	**5**	**0**	**280**		**34518.510**	**34784.203**	**265.693**	**34**	**2**	**1435**	**0**	**998**	**1045**	**0**	**0**	**2**	**116**	**1**	**0**	**0**	**0**	**0**	**0**	**0**	**750**	**2**	**234069**
Gadag Division - Grand Total			**12**	**17**	**5**	**0**	**330**		**41661.605**	**41975.377**	**313.773**	**34**	**2**	**1930**	**0**	**1397**	**1276**	**0**	**0**	**2**	**121**	**1**	**0**	**0**	**0**	**0**	**0**	**0**	**750**	**2**	**295931**
HUBLI DIVISION																															
1	KUSAGAL ROAD	33/11 KV	2				10	11 KV E4 Series Feeder - F1	364.960	372.562	7.602						39				12		1								7215
								11 KV Nehru Nagar Feeder - F2	404.420	410.444	6.024					5	68				9										9365
								11 KV Parasawadi Feeder - F3	52.060	53.908	1.848					6	36				2										4478
								11 KV F Series Feeder - F5	325.760	329.762	4.002					1	8														863
								11 KV G Series Feeder - F4	525.668	532.424	6.756						21				13										5350
								11 KV Kusagal Feeder - F6	253.640	255.754	2.114					4	28				3										3802
Sub-Total (1)			**2**	**0**	**0**	**0**	**10**		**1926.508**	**1954.855**	**28.347**	**0**	**0**	**0**	**0**	**16**	**200**	**0**	**0**	**0**	**39**	**0**	**1**	**0**	**0**	**0**	**0**	**0**	**0**	**0**	**31073**
2	KIMS	33/11KV	2				10	11 KV D Feeder - F4	314.536	319.420	4.884						16				3										2350
								11 KV I Feeder - F3	141.202	144.944	3.742						9				2										1400
								11 KV J Feeder - F5	89.940	96.372	6.432					1	16				7										3413
								11 KV F Feeder - F2	413.594	418.822	5.228					1	13				9										3613
								11 KV H Feeder - F1	405.220	413.726	8.506			1		11	51				18										10318
Sub-Total (2)			**2**	**0**	**0**	**0**	**10**		**1364.492**	**1393.284**	**28.792**	**0**	**0**	**1**	**0**	**13**	**105**	**0**	**0**	**0**	**39**	**0**	**0**	**0**	**0**	**0**	**0**	**0**	**0**	**0**	**21094**
3	INDUSTRIAL	33/11 KV	2				10	11 KV Vidyanagar Feeder - F1	773.580	774.054	0.474					7	22				5										3891
								11 KV Ferro Concrete Feeder - F2	512.430	516.417	3.987						3				19										5050
								11 KV Industrial Feeder - F3	1126.684	1132.608	5.924					1	4				10										2963
								11 KV Rani Chanamma Feeder - F4	791.616	796.053	4.437			1		1	18				9										4138
Sub-Total (3)			**2**	**0**	**0**	**0**	**10**		**3204.310**	**3219.132**	**14.822**	**0**	**0**	**1**	**0**	**9**	**47**	**0**	**0**	**0**	**43**	**0**	**0**	**0**	**0**	**0**	**0**	**0**	**0**	**0**	**16042**
Hubli Division 33/11 KV - Total [Sub-Total (1) to (3)]			**6**	**0**	**0**	**0**	**30**		**6495.310**	**6567.271**	**71.961**	**0**	**0**	**2**	**0**	**38**	**352**	**0**	**0**	**0**	**121**	**0**	**1**	**0**	**0**	**0**	**0**	**0**	**0**	**0**	**68209**
4	PH Compound	110/11KV	1	1	1		35	J.C.Nagar (A & E Trunk)	551.581	562.779	11.198					1	13			1	12										4563
								Ganesh peth(C Trunk)	512.692	521.255	8.563			1			12		1	2	18										6285
								Durgad Bail(D Trunk)	228.410	234.998	6.588						10				23				1						7250
								Mantur Road	111.468	116.500	5.032			2		2	11				1										1526
								A trunk	673.380	683.604	10.224					2	8			1	9				1						3876
								Mangalwarpet from PHS	469.605	474.933	5.328			1		1	8				8									f	2888
Sub-Total (4)			**1**	**1**	**1**	**0**	**35**		**2547.136**	**2594.069**	**46.933**	**0**	**0**	**4**	**0**	**6**	**62**	**0**	**1**	**4**	**71**	**0**	**0**	**0**	**2**	**0**	**0**	**0**	**0**	**0**	**26388**
5	Tarihal	110/11KV		1	1		30	Old IE Colony	178.125	179.627	1.501			4		3	5														789
								Unkal	101.241	102.500	1.259						5														500
								Gandhinagar	606.360	609.645	3.285			3		1	1				1										488
								KSSIDC	15.711	16.883	1.172			1		3	16				5										3064
								Tarihal	1735.500	1744.653	9.153					0	10				5										2250
								SiddiVinayak	84.739	88.643	3.904			1			9				3										1675
								I.E.Feeder	109.944	113.580	3.636			0		1	7				6										2263
								College	20.824	23.325	2.501			7		1	17														1938
								Gokul	7.191	8.286	1.095			9		3	2														614
								New College	6.943	8.897	1.954			11		2	4														801
								Revadihal	68.958	74.124	5.166	5	6	14		13	11														2409
Sub-Total (5)			**0**	**1**	**1**	**0**	**30**		**2935.536**	**2970.162**	**34.626**	**5**	**6**	**50**	**0**	**27**	**87**	**0**	**0**	**0**	**20**	**0**	**0**	**0**	**0**	**0**	**0**	**0**	**0**	**0**	**16791**
6	Navanagar	110/11KV		1			10	Navanagar	843.240	849.816	6.576			9		15	60				15				1						11420
								Sai Nagar	2396.490	2406.549	10.059			2		26	58				8										9488
								Gamanagatti	614.595	616.584	1.989			2		4	5				2										1302
								Sutagatti	304.905	307.641	2.736			3		56	128				10										18903
Sub-Total (6)			**0**	**1**	**0**	**0**	**10**		**4159.230**	**4180.590**	**21.360**	**0**	**0**	**16**	**0**	**101**	**251**	**0**	**0**	**0**	**35**	**0**	**0**	**0**	**1**	**0**	**0**	**0**	**0**	**0**	**41113**

Sl. No.	Name of PSS	Voltage Level	Power Transformer in nos.				PTR Capacity in MVA	Name of Outgoing 11 kV Feeder	A	B	C = B-A			DISTRIBUTION TRANSFORMER DETAIL IN NOS.																No. of Bulk	Total DTR Capacity on kVA (incl. Bulk)
			5 MVA	10 MVA	20 MVA	100 MVA			Initial Meter Reading in LU at 11 kV side of PSS	Final Meter Reading in LU at 11 kV side of PSS	Energy Consumption in LU (July'13)	10 KVA	15 KVA	25 KVA	50 KVA	63 KVA	100 KVA	150 KVA	160 KVA	200 KVA	250 KVA	300 KVA	315 KVA	400 KVA	500 KVA	630 KVA	750 KVA	990 KVA	HT Load in KVA		
7	Anand Nagar	110/11KV		2			20	Shiddarooda	324.660	331.586	6.926			1		4	35														3777
								Shakthinagar	345.423	349.870	4.447			2		3	32				15										7189
								Murudeshwar	489.323	497.975	8.652					1	15				22										7063
								A7 Trunk	572.552	587.124	14.572			7		18	38				5										6359
								K2 Trunk(indi pump)	314.519	319.028	4.509						4				1										650
								Anandnagar	888.760	892.351	3.591			3		4	66				4										7927
								Subhashnagar	1053.200	1059.732	6.532					1	46				1										4913
								J2 Trunk (esi)	395.758	398.406	2.648										5										1250
Sub-Total (7)			**0**	**2**	**0**	**0**	**20**		**4384.195**	**4436.072**	**51.877**	**0**	**0**	**13**	**0**	**31**	**236**	**0**	**0**	**0**	**53**	**0**	**0**	**0**	**0**	**0**	**0**	**0**	**0**	**0**	**39128**
8	Gopankoppa	110/11KV			3		60	Bhavaninagar	4.746	7.398	2.652	3	7	11		10	2														1240
								Vishweshwarnagar L Trunk	932.760	940.684	7.924		7	13		5	7				1										1695
								H-trunk	59.050	64.522	5.472					11	54				10										8593
								G-Trunk	50.491	60.522	10.031					10	27				7										5080
								Badaminagar	25.261	28.632	3.371					3	43				4										5489
Sub-Total (8)			**0**	**0**	**3**	**0**	**60**		**1072.308**	**1101.758**	**29.450**	**3**	**14**	**24**	**0**	**39**	**133**	**0**	**0**	**0**	**22**	**0**	**0**	**0**	**0**	**0**	**0**	**0**	**0**	**0**	**22097**
9	Gadag Road	110/11KV		4			40	Railway(Bulk)	61.663	65.814	4.151						2														200
								Railway Zonal	5.368	5.750	0.382			1			3														325
								Saraswatipuram	256.458	256.944	0.486					5	108				1										11365
Sub-Total (9)			**0**	**4**	**0**	**0**	**40**		**323.489**	**328.508**	**5.019**	**0**	**0**	**1**	**0**	**5**	**113**	**0**	**0**	**0**	**1**	**0**	**0**	**0**	**0**	**0**	**0**	**0**	**0**	**0**	**11890**
10	Akshay colony	110/11KV		2			20	Siddeshwara	54.030	60.184	6.154			5		6	26				6										4603
								Timber yard	120.946	129.622	8.676			1		18	41				9				1						8009
								Rambhapuri	313.920	321.872	7.952			1		14	48				12				1						9207
								MT sagar (Akshay Colony)	171.664	177.840	6.176					15	40				17										9195
								Akshaya Colony (Air Port)	210.560	215.324	4.764					7	38				10										6741
								Ravi Nagar (Miro Finish)	0.886	6.070	5.184						15				8										3500
Sub-Total (10)			**0**	**2**	**0**	**0**	**20**		**872.006**	**910.912**	**38.906**	**0**	**0**	**7**	**0**	**60**	**208**	**0**	**0**	**0**	**62**	**0**	**0**	**0**	**2**	**0**	**0**	**0**	**0**	**0**	**41255**
11	Annigeri	110/11KV		1			10	BHADRAPUR	32.110	34.324	2.214	10	8	10		5															785
								Annigeri	112.780	114.984	2.204	9		12			4														790
								Koliwad	58.282	60.648	2.366	4		17		8															969
Sub-Total (11)			**0**	**1**	**0**	**0**	**10**		**203.172**	**209.956**	**6.784**	**23**	**8**	**39**	**0**	**13**	**4**	**0**	**0**	**0**	**0**	**0**	**0**	**0**	**0**	**0**	**0**	**0**	**0**	**0**	**2544**
12	220KV SRS	110/11	2	2		2	260	MRT	6178.600	6234.900	56.300						4				1										650
								Giriyal	79837.600	80619.300	781.700		1	2		1	21				5										3478
								Hubli City	3989.720	4048.170	58.450			2			32				16										7250
Sub-Total (12)			**2**	**2**	**0**	**2**	**260**		**90005.920**	**90902.370**	**896.450**	**0**	**1**	**4**	**0**	**1**	**57**	**0**	**0**	**0**	**22**	**0**	**0**	**0**	**0**	**0**	**0**	**0**	**0**	**0**	**11378**
Hubli Division 110/11 KV - Total			**1**	**12**	**5**	**0**	**225**		**16497.072**	**16732.027**	**234.955**	**31**	**28**	**154**	**0**	**282**	**1094**	**0**	**1**	**4**	**264**	**0**	**0**	**0**	**5**	**0**	**0**	**0**	**0**	**0**	**201206**
1	Bidnal	220/11KV		2		2	220	Sherewad	362.887	372.019	9.132	4	6	19		29	26														5032
								Haliyal	31.174	31.777	0.603	1	1	3		1	1														263
								S.G.Nagar	43.680	44.872	1.192			18		1	4														913
								Bidnal	500.519	506.628	6.109					6	20				7										4128
								Gabbur	13.822	17.784	3.962			2		2	16				2										2276
Sub-Total (1)			**0**	**2**	**0**	**2**	**220**		**952.082**	**973.080**	**20.998**	**5**	**7**	**42**	**0**	**39**	**67**	**0**	**0**	**0**	**9**	**0**	**0**	**0**	**0**	**0**	**0**	**0**	**0**	**0**	**12612**
Hubli Division 220/11 KV - Total [Sub-Total (4) to (12)]			**0**	**2**	**0**	**2**	**220**		**952.082**	**973.080**	**20.998**	**5**	**7**	**42**	**0**	**39**	**67**	**0**	**0**	**0**	**9**	**0**	**0**	**0**	**0**	**0**	**0**	**0**	**0**	**0**	**12612**
Hubli Division - Grand Total			**7**	**14**	**5**	**2**	**475**		**23944.464**	**24272.378**	**327.914**	**36**	**35**	**198**	**0**	**359**	**1513**	**0**	**1**	**4**	**394**	**0**	**1**	**0**	**5**	**0**	**0**	**0**	**0**	**0**	**282027**
HUBLI CIRCLE - TOTAL			**33**	**43**	**14**	**2**	**1075**		**102598.867**	**103730.061**	**1131.194**	**78**	**181**	**3840**	**1**	**3338**	**4323**	**0**	**1**	**10**	**596**	**1**	**1**	**0**	**6**	**0**	**0**	**0**	**3550**	**5**	**900464**
Hubli Circle 11 kV Side Input Energy (Import from other circle/utility) :											**18.4**																				
Hubli Circle 11 kV Side Input Energy (Export to other circle/utility) :											**11.5**																				
Hubli Circle 11 kV Side net Input Energy :											**1138.094**																				

11 kV FEEDERS DETAIL
WITH DTR CAPACITY
OF
GULBERGA CIRCLE
IN
KARNATAKA STATE

STUDY ON COMPONENT-WISE AT&C LOSSES ASSESSMENT FOR THE STATE OF KARNATAKA

B. 11 kV FEEDERS DETAIL OF GULBARGA CIRCLE

Sl. No.	Name of PSS	Voltage Level	Power Transformer in Nos.				PTR Capacity in MVA	Name of Outgoing 11 kV Feeder	A	B	C = B-A			DISTRIBUTION TRANSFORMER DETAIL IN NOS.																	No. of HT Bulk	Total DTR Capacity in kVA (including Bulk)
			5 MVA	10 MVA	20 MVA	100 MVA			Initial Meter Readingin LU at 11 kV side of PSS	Final Meter Reading in LU at 11 kV side of PSS	Energy Consumption in LU (July'13)	10 KVA	15 KVA	25 KVA	50 KVA	63 KVA	80 KVA	100 KVA	150 KVA	160 KVA	200 KVA	250 KVA	300 KVA	315 KVA	400 KVA	500 KVA	630 KVA	750 KVA	990 KVA	HT Load in KVA		
GULBARGA DIVISION-I																																
1	Jambaga	33/11KV	1				5	F1 Jambaga			1.444			17		13		8														2044
								F2 Kalhangarga			2.850			29		29		10														3552
								F3 Tajsultanpur			1.492			18		15		22														3595
Sub-Total (1)			**1**	**0**	**0**	**0**	**5**		**0.000**	**0.000**	**5.786**	**0**	**0**	**64**	**0**	**57**	**0**	**40**	**0**	**0**	**0**	**0**	**0**	**0**	**0**	**0**	**0**	**0**	**0**	**0**	**9191**
2	Hadgil-Haruthi	33/11KV	2				10	F1 Hadgil			2.758			17		29		23														4552
								F2 Kadani			1.333			20		16		8														2308
								F3 S Sirasagi			1.383			8		14		14														2482
Sub-Total (2)			**2**	**0**	**0**	**0**	**10**		**0.000**	**0.000**	**5.474**	**0**	**0**	**45**	**0**	**59**	**0**	**45**	**0**	**0**	**0**	**0**	**0**	**0**	**0**	**0**	**0**	**0**	**0**	**0**	**9342**
3	Azadpur	33/11KV	2				10	Omer colony			8.046			5		7		8				5				1						3116
								Sapna bekary			6.732			1		2		5				5										1901
								F3 Hagarga			2.962			10		1		1														413
								F4 Saradagi			5.562			32		11		8														2293
Sub-Total (3)			**2**	**0**	**0**	**0**	**10**		**0.000**	**0.000**	**23.302**	**0**	**0**	**48**	**0**	**21**	**0**	**22**	**0**	**0**	**0**	**10**	**0**	**0**	**0**	**1**	**0**	**0**	**0**	**0**	**0**	**7723**
4	Khajuri	33/11KV	1				5	F1 Alanga			3.010			15		37		12														3906
								F2 Hodlur			1.670			17		20		10														2685
								F3 Rudrawadi			2.440			23		33		19				1										4804
								F4 Khajuri			1.850			6		5		5														965
Sub-Total (4)			**1**	**0**	**0**	**0**	**5**		**0.000**	**0.000**	**8.970**	**0**	**0**	**61**	**0**	**95**	**0**	**46**	**0**	**0**	**0**	**1**	**0**	**0**	**0**	**0**	**0**	**0**	**0**	**0**	**0**	**12360**
5	Tadkal	33/11 KV	2				10	F1 Munnolli			2.250			8		8		6														1304
								F2 Tadkal			2.620			1		6		1														503
								F3 Kanmus			0.070			5		8		1														729
								Degoan NJY (F3)			1.210			6		5		2				1										915
								Nasirawadi (F6)			0.980			10		10		1				1										1230
								F4 Belamagi			0.360			5		6		1														603
Sub-Total (5)			**2**	**0**	**0**	**0**	**10**		**0.000**	**0.000**	**7.490**	**0**	**0**	**35**	**0**	**43**	**0**	**12**	**0**	**0**	**0**	**2**	**0**	**0**	**0**	**0**	**0**	**0**	**0**	**0**	**0**	**5284**
6	Sarsamba	33/11 KV	1				5	F1 Sarsamba			2.050			20		14		16														2982
								F2 Hirolli			1.980			18		13		12														2469
								F3 Savleshwar			4.260			22		33		23														4929
Sub-Total (6)			**1**	**0**	**0**	**0**	**5**		**0.000**	**0.000**	**8.290**	**0**	**0**	**60**	**0**	**60**	**0**	**51**	**0**	**0**	**0**	**0**	**0**	**0**	**0**	**0**	**0**	**0**	**0**	**0**	**0**	**10380**
7	Nimbarga	33/11KV	1				5	F1 Hittalsirur			1.284			6		5		8														1265
								F2 Bommanhalli			1.237			4		3		5														789
								F3 Dangapur			2.124			4		6		2														678
								F4 Nimbarga			2.169			6		6		6				1										1378
Sub-Total (7)			**1**	**0**	**0**	**0**	**5**		**0.000**	**0.000**	**6.813**	**0**	**0**	**20**	**0**	**20**	**0**	**21**	**0**	**0**	**0**	**1**	**0**	**0**	**0**	**0**	**0**	**0**	**0**	**0**	**0**	**4110**

Sl. No.	Name of PSS	Voltage Level	Power Transformer in Nos.				PTR Capacity in MVA	Name of Outgoing 11 kV Feeder	A	B	C = B-A			DISTRIBUTION TRANSFORMER DETAIL IN NOS.																	No. of HT Bulk	Total DTR Capacity in kVA (including Bulk)
			5 MVA	10 MVA	20 MVA	100 MVA			Initial Meter Readingin LU at 11 kV side of PSS	Final Meter Reading in LU at 11 kV side of PSS	Energy Consumption in LU (July'13)	10 KVA	15 KVA	25 KVA	50 KVA	63 KVA	80 KVA	100 KVA	150 KVA	160 KVA	200 KVA	250 KVA	300 KVA	315 KVA	400 KVA	500 KVA	630 KVA	750 KVA	990 KVA	HT Load in KVA		
8	Kadganchi	33/11KV	1				5	F1 Narona			6.755			3		4		3				1										
								F2 Ladchincholi			9.010			22		16		9				1										
								F3 Kadganchi			3.237			2		3		7				1										
								F4 Suntanur			1.548			3		2		4														
Sub-Total (8)			**1**	**0**	**0**	**0**	**5**		**0.000**	**0.000**	**20.551**	**0**	**0**	**30**	**0**	**25**	**0**	**23**	**0**	**0**	**0**	**3**	**0**	**0**	**0**	**0**	**0**	**0**	**0**	**0**	**0**	**5375**
9	V.K. Salgar	33/11KV	1				5	F1 Ambalga			3.650			15		8		5				1										
								F2 V K Salgar			1.121			5		2		2				1										
								F4 Karhari			5.692			14		6		19				2										
								F6 Mudadga			2.915			5		7		5														
Sub-Total (9)			**1**	**0**	**0**	**0**	**5**		**0.000**	**0.000**	**13.378**	**0**	**0**	**39**	**0**	**23**	**0**	**31**	**0**	**0**	**0**	**4**	**0**	**0**	**0**	**0**	**0**	**0**	**0**	**0**	**0**	**6524**
10	Jidga	33/11KV	1				5	F1 Jidaga			1.850			10		12		7				1										
								F2 Kavalga			1.290			13		12		11														
Sub-Total (10)			**1**	**0**	**0**	**0**	**5**		**0.000**	**0.000**	**3.140**	**0**	**0**	**23**	**0**	**24**	**0**	**18**	**0**	**0**	**0**	**1**	**0**	**0**	**0**	**0**	**0**	**0**	**0**	**0**	**0**	**4137**
11	M.Hipparga	33/11KV	2				10	F3 Chandankera			3.850			5		14		17				1										
								F4 M.Hipparga			3.100			6		16		11				2										
								F5 Ningadalli			3.250			6		3		18														
Sub-Total (11)			**2**	**0**	**0**	**0**	**10**		**0.000**	**0.000**	**10.200**	**0**	**0**	**17**	**0**	**33**	**0**	**46**	**0**	**0**	**0**	**3**	**0**	**0**	**0**	**0**	**0**	**0**	**0**	**0**	**0**	**7854**
12	Chowdapur	33/11KV	1				5	F1 Ghangapur			3.250			8		12		10				1										
								F2 Banderwad			2.360			5		15		13														
								F4 Neelur			2.910			4		19		8				1										
								F5 Itga			3.170			6		12		16														
Sub-Total (12)			**1**	**0**	**0**	**0**	**5**		**0.000**	**0.000**	**11.690**	**0**	**0**	**23**	**0**	**58**	**0**	**47**	**0**	**0**	**0**	**2**	**0**	**0**	**0**	**0**	**0**	**0**	**0**	**0**	**0**	**9429**
13	Revoor(B)	33/11KV	2				10	F1 Kulali			2.170			4		10		14														
								F2 Revoor			0.360			5		8		4														
								F3 Chincholi			2.140			12		6		20														
								Badadal			5.360			18		14		19				1										
								Shivoor			1.810			6		10		11														
								Udchan			1.280			8		12		9														
								Karajagi			3.450			15		13		10				1										
								Manur			4.190			21		8		17				2										
								Gour(B)			0.780			4		5		7														
Sub-Total (13)			**2**	**0**	**0**	**0**	**10**		**0.000**	**0.000**	**21.540**	**0**	**0**	**93**	**0**	**86**	**0**	**111**	**0**	**0**	**0**	**4**	**0**	**0**	**0**	**0**	**0**	**0**	**0**	**0**	**0**	**19843**
14	Gobbur	33/11KV	2				10	F1 Gobbur			2.130			4		5		17														
								F2 Havnoor			2.054			8		10		18														
								Industrila			1.235			15		5		8														
Sub-Total (14)			**2**	**0**	**0**	**0**	**10**		**0.000**	**0.000**	**5.419**	**0**	**0**	**27**	**0**	**20**	**0**	**43**	**0**	**0**	**0**	**0**	**0**	**0**	**0**	**0**	**0**	**0**	**0**	**0**	**0**	**6235**
15	Udchan	33/11KV	2				10	F1 Udchan			4.350			24		8		14				3										
								F2 Hatti			3.180			17		15		19				2										
Sub-Total (15)			**2**	**0**	**0**	**0**	**10**		**0.000**	**0.000**	**7.530**	**0**	**0**	**41**	**0**	**23**	**0**	**33**	**0**	**0**	**0**	**5**	**0**	**0**	**0**	**0**	**0**	**0**	**0**	**0**	**0**	**7024**

Sl. No.	Name of PSS	Voltage Level	Power Transformer in Nos.				PTR Capacity in MVA	Name of Outgoing 11 kV Feeder	A	B	C = B-A			DISTRIBUTION TRANSFORMER DETAIL IN NOS.																	No. of HT Bulk	Total DTR Capacity in kVA (including Bulk)
			5 MVA	10 MVA	20 MVA	100 MVA			Initial Meter Readingin LU at 11 kV side of PSS	Final Meter Reading in LU at 11 kV side of PSS	Energy Consumption in LU (July'13)	10 KVA	15 KVA	25 KVA	50 KVA	63 KVA	80 KVA	100 KVA	150 KVA	160 KVA	200 KVA	250 KVA	300 KVA	315 KVA	400 KVA	500 KVA	630 KVA	750 KVA	990 KVA	HT Load in KVA		
16	Gudur	33/11KV	2				10	F5 Neelur			4.180			17		18		13				2										3359
								F6 Bhairamadagi			2.339			19		5		9				1										1940
Sub-Total (16)			**2**	**0**	**0**	**0**	**10**		**0.000**	**0.000**	**6.519**	**0**	**0**	**36**	**0**	**23**	**0**	**22**	**0**	**0**	**0**	**3**	**0**	**0**	**0**	**0**	**0**	**0**	**0**	**0**	**0**	**5299**
17	Mannur	33/11KV	1				5	Shivur			2.004			8		21		7				2										2723
								Ram Nagar NJY			2.870			14		16		13				1										2908
								Mannur IP			3.480			19		14		10				1										2607
								NJY			4.170			17		18		14														2959
								Hipparaga			1.980			12		8		16														2404
								Yatnoor			5.340			18		21		16				4										4373
								Bellur			2.160			12		15		11				1										2595
								Badnihal			2.900			21		17		14														2996
								Mandewal			3.008			22		14		18				2										3732
Sub-Total (17)			**1**	**0**	**0**	**0**	**5**	**Bellur**	**0.000**	**0.000**	**27.912**	**0**	**0**	**143**	**0**	**144**	**0**	**119**	**0**	**0**	**0**	**11**	**0**	**0**	**0**	**0**	**0**	**0**	**0**	**0**	**0**	**27297**
18	Hasaragundagi	33/11KV	1				5	F1 Hasargundgi			2.470			26		21		12														3173
								Nrupatunga			1.386			6		6		19														2428
								AIR			2.358			4		7		11				5										4423
								Chinamgera			1.570			26		21		12														10415
Sub-Total (18)			**1**	**0**	**0**	**0**	**5**		**0.000**	**0.000**	**7.784**	**0**	**0**	**62**	**0**	**55**	**0**	**54**	**0**	**0**	**0**	**5**	**0**	**0**	**0**	**0**	**0**	**0**	**0**	**0**	**0**	**20439**
19	110/11 kV Gulbarga SOUTH	110/11 kV		2			20	POLICE COLONY	552.556	559.708	7.152			2		8	1	4				7										2784
								AIWAN-E-SHAHI	811.062	817.942	6.880			5		9		8				9				1						4242
								MAHAVEER NAGAR	560.841	573.462	12.621			8		7		2				10				2						4341
								GODUTAI	540.081	549.62	9.539	1		9		9		8				4										2602
								HOUSING BOARD	484.248	485.888	1.640		40	24		23		4				2										3549
								VITHAL NAGAR	919.678	930.062	10.384			10		14		19				13				1						6782
								SHAKTI NAGAR	214.347	217.157	2.810			3		11		22				7				3						6218
								RAM MANDIR	290.042	295.737	5.695	1		9		6		8				8										3413
								KOPNOOR W/S	365.233	370.483	5.250																					0
								JEWARGI COLONY	513.319	523.069	9.750			7		7		15				4										3116
								INDUSTRIAL FEEDER	467.136	475.6	8.464			5		10		19				7										4405
								BASAVESWAR	541.328	545.827	4.499			6		6		12				2										2228
								RAGHAVENDRA COLONY	442.476	442.538	0.062		31	31		20						2										3000
Sub-Total (19)			**0**	**2**	**0**	**0**	**20**		**6702.347**	**6787.093**	**84.746**	**2**	**71**	**119**	**0**	**130**	**1**	**121**	**0**	**0**	**0**	**75**	**0**	**0**	**0**	**7**	**0**	**0**	**0**	**0**	**0**	**46680**
20	110/11 kV Gulbarga University	110/11 kV		2			20	SHARAN NAGAR	159.508	165.600	6.092	1		6		13		11				11				1						5329
								JAY NAGAR	154.308	163.201	8.892			9		10		26				6										4955
								G.G.H	146.205	150.068	3.863		17	8		11		1														1248
								Nandoor			2.320			4		13		9				1										2069
								Sri- Saradagi Exp			1.580			14		8		9				2										2254
								UNIVERSITY	132.594	133.836	1.242	0	8	11	0	13	0	4	0	0	0	0										1614
								Siddeshwar			10.500					12		24				7										4906
								Ganesh Nagar			11.111		1	17		21		37				9										7713
								Kesaratgi			5.600		9	12		24		21				6										5547
Sub-Total (20)			**0**	**2**	**0**	**0**	**20**		**592.615**	**612.704**	**51.200**	**1**	**35**	**81**	**0**	**125**	**0**	**142**	**0**	**0**	**0**	**42**	**0**	**0**	**0**	**1**	**0**	**0**	**0**	**0**	**0**	**35635**
								MSK MILL	518.939	528.974	10.035		21	31		32		6				3										4456

Sl. No.	Name of PSS	Voltage Level	Power Transformer in Nos.				PTR Capacity in MVA	Name of Outgoing 11 kV Feeder	A	B	C = B-A			DISTRIBUTION TRANSFORMER DETAIL IN NOS.																	No. of HT Bulk	Total DTR Capacity in kVA (including Bulk)
			5 MVA	10 MVA	20 MVA	100 MVA			Initial Meter Readingin LU at 11 kV side of PSS	Final Meter Reading in LU at 11 kV side of PSS	Energy Consumption in LU (July'13)	10 KVA	15 KVA	25 KVA	50 KVA	63 KVA	80 KVA	100 KVA	150 KVA	160 KVA	200 KVA	250 KVA	300 KVA	315 KVA	400 KVA	500 KVA	630 KVA	750 KVA	990 KVA	HT Load in KVA		
21	110/33/11 kV Gulbarga West	110/11 kV		1	1		30	Aland colony	42.368	47.874	5.506		14	16		22		8														2796
								Zafrabad	278.248	284.648	6.400		21	19		24		9				4										4202
								SHANTI NAGAR	120.286	130.700	10.414		71	61		31		8				2				2						6843
								OLD AIR PORT	721.124	726.514	5.390		17	31	0	20	0	9	0	0	0	1										3440
								HIGHCOURT	59.538	60.740	1.203		0	8	0	10	0	6	0	0	0	0										1430
Sub-Total (21)			**0**	**1**	**1**	**0**	**30**		**1740.503**	**1779.450**	**38.948**	**0**	**144**	**166**	**0**	**139**	**0**	**46**	**0**	**0**	**0**	**10**	**0**	**0**	**0**	**2**	**0**	**0**	**0**	**0**	**0**	**23167**
22	110/11 kV Gulbarga NORTH	110/11 kV		1	3		70	INDUSTRIAL FEEDER			10.034	0	0	0	0	0	0	0	0	0	0	0	0	0	0	0	0	0	0	0		0
								DARGA			10.116		26	26		19		17				8				2						6937
								Bank Colony			7.092		18	31		34		15				11				1						7937
								T.V. Station			5.004			3		7		3				8										2816
								Cinema			10.681		2	7		9		15				6				2						4772
								Adarsh Nagar			4.669			4		8		11				8										3704
								Taj Nagar			5.257		46	10		26		10				1										3828
								Brahampur			6.811		9	7		10		10				8				1						4440
								Super Market			2.638		1	2				4				4				1						1965
								Mehboob Nagar			8.869			6		9		6				12				1						4817
								Gazipura			6.880		2	6		6		14				10				1						4958
Sub-Total (22)			**0**	**1**	**3**	**0**	**70**		**0.000**	**0.000**	**78.051**	**0**	**104**	**102**	**0**	**128**	**0**	**105**	**0**	**0**	**0**	**76**	**0**	**0**	**0**	**9**	**0**	**0**	**0**	**0**	**0**	**46174**
23	110 KV ALAND	110/11 kV		2	1		40	Khanapur			1.810					7																	441
								Khanapur+Shakapur			4.310		12	14		9		11														2197
								Water Supply			2.650							2				1										450
								Shakapur			5.140			14		17		7														2121
								Aland (Hanuman Temple)			7.140			2		4		3				3										1352
								Busnur			5.030			28		42		31				2										6946
								Telkuni			6.170			10		14		5														1632
								Hebli			3.370			20		32		13														3816
Sub-Total (23)			**0**	**2**	**1**	**0**	**40**		**0.000**	**0.000**	**35.620**	**0**	**12**	**88**	**0**	**125**	**0**	**72**	**0**	**0**	**0**	**6**	**0**	**0**	**0**	**0**	**0**	**0**	**0**	**0**	**0**	**18955**
24	110/11 kV Kapnoor	110/11 kV		1			10	KIADB II			4.740					1		3				2											863
								Harsoor			2.454			12		5		9														1515
								KIADB 1st Stage			5.268					4		36				14						1				8102
								Belur IND			4.697			14		9		17				5										3867
								F7 Ashok Polymer			1.818			16		11		21				3										3943
								Avrad Exp			0.458			6		3		4				2										1239
Sub-Total (24)			**0**	**1**	**0**	**0**	**10**		**0.000**	**0.000**	**19.435**	**0**	**0**	**48**	**0**	**33**	**0**	**90**	**0**	**0**	**0**	**26**	**0**	**0**	**0**	**0**	**0**	**1**	**0**	**0**	**0**	**19529**
25	11 0 KV Madyal	110/11 kV		2	1		40	Madyal			3.018			5		8		6														1229
								Nimbal			3.193			11		9		8														1642
								Devantagi			4.120			21		9		11				3										2942
Sub-Total (25)			**0**	**2**	**1**	**0**	**40**		**0.000**	**0.000**	**10.331**	**0**	**0**	**37**	**0**	**26**	**0**	**25**	**0**	**0**	**0**	**3**	**0**	**0**	**0**	**0**	**0**	**0**	**0**	**0**	**0**	**5813**

Sl. No.	Name of PSS	Voltage Level	Power Transformer in Nos.				PTR Capacity in MVA	Name of Outgoing 11 kV Feeder	A	B	C = B-A			DISTRIBUTION TRANSFORMER DETAIL IN NOS.																	No. of HT Bulk	Total DTR Capacity in kVA (including Bulk)
			5 MVA	10 MVA	20 MVA	100 MVA			Initial Meter Readingin LU at 11 kV side of PSS	Final Meter Reading in LU at 11 kV side of PSS	Energy Consumption in LU (July'13)	10 KVA	15 KVA	25 KVA	50 KVA	63 KVA	80 KVA	100 KVA	150 KVA	160 KVA	200 KVA	250 KVA	300 KVA	315 KVA	400 KVA	500 KVA	630 KVA	750 KVA	990 KVA	HT Load in KVA		
26	110/33/11 kV Mahagaon	110/33/11		2			20	Jivanagi			3.420			14		13		16				4										3769
								Kamalapur			4.871			21		11		14				2										3118
								Mahagaoun			1.954			6		5		10														1465
								Nagur			1.306			6		2		8														1076
								Bablad			3.357			11		15		10														2220
								Benetora			3.475			14		13		11														2269
Sub-Total (26)			**0**	**2**	**0**	**0**	**20**		**0.000**	**0.000**	**18.383**	**0**	**0**	**72**	**0**	**59**	**0**	**69**	**0**	**0**	**0**	**6**	**0**	**0**	**0**	**0**	**0**	**0**	**0**	**0**	**0**	**13917**
27	110/11 kV Margutti			1			10	Sonth			2.056			12		10		16														2530
								Dongargaon			2.022			9		8		12														1929
								Rajnal			3.246			10		15		13				2										2995
Sub-Total (27)			**0**	**1**	**0**	**0**	**10**		**0.000**	**0.000**	**7.324**	**0**	**0**	**31**	**0**	**33**	**0**	**41**	**0**	**0**	**0**	**2**	**0**	**0**	**0**	**0**	**0**	**0**	**0**	**0**	**0**	**7454**
Gulbarga Division-I - Total [Sub-Total (1) to (27)]			**26**	**14**	**6**	**0**	**390**				**545.825**	**3**	**366**	**1611**	**0**	**1667**	**1**	**1495**	**0**	**0**	**0**	**301**	**0**	**0**	**0**	**20**	**0**	**1**	**0**	**0**	**0**	**395170**
GULBARGA DIVISION-II																																
1	Nidagunda	33/11 kV	2				10	Nidgunda			0.697			7		5		21				2										3090
								Karchkhed			0.314			12		8		7														1504
Sub-Total (1)			**2**	**0**	**0**	**0**	**10**		**0.000**	**0.000**	**1.011**	**0**	**0**	**19**	**0**	**13**	**0**	**28**	**0**	**0**	**0**	**2**	**0**	**0**	**0**	**0**	**0**	**0**	**0**	**0**	**0**	**4594**
2	Kalagi	33/11 kV	2				10	F1 Kalagi	302.690	303.059	0.369			8		4		6														1052
								Kodadoor			3.350			25		15		6														2170
								F2 Gotur			2.460			11		3		2														664
Sub-Total (2)			**2**	**0**	**0**	**0**	**10**		**302.690**	**303.059**	**6.179**	**0**	**0**	**44**	**0**	**22**	**0**	**14**	**0**	**0**	**0**	**0**	**0**	**0**	**0**	**0**	**0**	**0**	**0**	**0**	**0**	**3886**
3	Nalwar	33/11 kV	1				5	F4 Station			0.800			4		14		8														1782
								F3 Konchur			5.000			16		14		12				1										2732
								F2 Nalwar	209.000	211.826	2.826			11		20		10														2535
								F1Sannathi	696.000	702.658	6.658					31	20	17														5253
Sub-Total (3)			**1**	**0**	**0**	**0**	**5**		**905.000**	**914.484**	**15.284**	**0**	**0**	**31**	**0**	**79**	**20**	**47**	**0**	**0**	**0**	**1**	**0**	**0**	**0**	**0**	**0**	**0**	**0**	**0**	**0**	**12302**
4	Gundagurthi	33/11 kV	2				10	F1 Gundgurthi	35.800	38.800	3.000			24		8		7														1804
								F2 Madbool	24.558	29.360	4.802			9		12		4				2										1881
Sub-Total (4)			**2**	**0**	**0**	**0**	**10**		**60.358**	**68.160**	**7.802**	**0**	**0**	**33**	**0**	**20**	**0**	**11**	**0**	**0**	**0**	**2**	**0**	**0**	**0**	**0**	**0**	**0**	**0**	**0**	**0**	**3685**
5	Hebbal	33/11 kV	2				10	F1 Hebbal	33.220	34.360	1.140			43		16		3														2383
								F3 Bilwara	48.356	50.217	1.861			21		15		8														2270
								Tonchi	29.921	30.182	0.260			20		9		2				1										1517
								F4 Jamkhandi	53.845	55.327	1.482			29		11		8				1										2468
Sub-Total (5)			**2**	**0**	**0**	**0**	**10**		**165.342**	**170.086**	**4.743**	**0**	**0**	**113**	**0**	**51**	**0**	**21**	**0**	**0**	**0**	**2**	**0**	**0**	**0**	**0**	**0**	**0**	**0**	**0**	**0**	**8638**
6	Allolli	33/11 kV	2				10	Alloli	252.100	256.400	4.300			14		18		17				2										3684
								Yagapur	5247.400	5259.100	11.700			42		19		21				8										6347
Sub-Total (6)			**2**	**0**	**0**	**0**	**10**		**5499.500**	**5515.500**	**16.000**	**0**	**0**	**56**	**0**	**37**	**0**	**38**	**0**	**0**	**0**	**10**	**0**	**0**	**0**	**0**	**0**	**0**	**0**	**0**	**0**	**10031**
7	Yedrami	33/11 kV	2				10	F1 Allur	152.078	160.072	7.994			18		14		20				5										4582
								F2 Malli	338.372	339.972	1.600			4		13		18														2719
								F3 Aralgundagi	381.360	382.662	1.302			9		8		7														1429
								F4 Yadrami	493.326	495.130	1.804			11		6		12														1853
Sub-Total (7)			**2**	**0**	**0**	**0**	**10**		**1365.136**	**1377.836**	**12.700**	**0**	**0**	**42**	**0**	**41**	**0**	**57**	**0**	**0**	**0**	**5**	**0**	**0**	**0**	**0**	**0**	**0**	**0**	**0**	**0**	**10583**

Sl. No.	Name of PSS	Voltage Level	Power Transformer in Nos.				PTR Capacity in MVA	Name of Outgoing 11 kV Feeder	A	B	C = B-A			DISTRIBUTION TRANSFORMER DETAIL IN NOS.																	No. of HT Bulk	Total DTR Capacity in kVA (including Bulk)
			5 MVA	10 MVA	20 MVA	100 MVA			Initial Meter Readingin LU at 11 kV side of PSS	Final Meter Reading in LU at 11 kV side of PSS	Energy Consumption in LU (July'13)	10 KVA	15 KVA	25 KVA	50 KVA	63 KVA	80 KVA	100 KVA	150 KVA	160 KVA	200 KVA	250 KVA	300 KVA	315 KVA	400 KVA	500 KVA	630 KVA	750 KVA	990 KVA	HT Load in KVA		
8	Ankalga	33/11 kV	2				10	F1 Ankalaga	61.798	64.000	2.202			4		9		17				2										2867
								F2 Ballundagi	45.554	47.748	2.194			18		6		14														2228
								F3 Narayanpur	94.212	95.960	1.748			21		4		7														1477
								F4 Itga	224.096	225.684	1.588			17		8		11														2029
								F5 LIS Sangam	234.210	236.570	2.360			14		17		19														3321
Sub-Total (8)			**2**	**0**	**0**	**0**	**10**		**659.870**	**669.962**	**10.092**	**0**	**0**	**74**	**0**	**44**	**0**	**68**	**0**	**0**	**0**	**2**	**0**	**0**	**0**	**0**	**0**	**0**	**0**	**0**	**0**	**11922**
9	Bilwara	33/11 kV	2				10	Bilwara	137.012	138.874	1.863			14		11		15														2543
								Jamakhandi	5.906	7.754	1.848			13		8		14				2										2729
Sub-Total (9)			**2**	**0**	**0**	**0**	**10**		**142.918**	**146.628**	**3.711**	**0**	**0**	**27**	**0**	**19**	**0**	**29**	**0**	**0**	**0**	**2**	**0**	**0**	**0**	**0**	**0**	**0**	**0**	**0**	**0**	**5272**
10	Nelogi	33/11 kV	2				10	F1 Nelogi	150.092	153.213	3.121			19		14		16				3										3707
								F2 Sonna	20.923	22.945	2.021			24		8		9				1										2254
								Firozabad			4.813			28		11		4														1793
								Farhatabab S			9.982			7		26		15				1										3563
								Heroor			7.801			60		21		33														6123
								Kiranagi			0.794			7		3		9														1264
Sub-Total (10)			**2**	**0**	**0**	**0**	**10**		**171.015**	**176.158**	**28.533**	**0**	**0**	**145**	**0**	**83**	**0**	**86**	**0**	**0**	**0**	**5**	**0**	**0**	**0**	**0**	**0**	**0**	**0**	**0**	**0**	**18704**
11	110KV Chittapur	110/11 kV		2	1		40	Bhaharpet	110.582	113.444	2.862			14		11		12				1										2493
								DANDOTHI	117.916	121.248	3.332			13		6		9				2										2103
								INDUSTRIAL	98.386	99.090	0.704					1		3														363
								WATER SUPPLY	24.340	24.938	0.598																					0
								Railway Station	172.310	177.654	5.344																					0
Sub-Total (11)			**0**	**2**	**1**	**0**	**40**		**523.534**	**536.374**	**12.840**	**0**	**0**	**27**	**0**	**18**	**0**	**24**	**0**	**0**	**0**	**3**	**0**	**0**	**0**	**0**	**0**	**0**	**0**	**0**	**0**	**4959**
12	220KV R/S Shahabad	110/11 kV		2		2	220	AMBIKA FEEDER	90.659	93.788	3.129			10		11		14														2343
								F5 Ganesh	149.775	154.291	4.516			19		14		16				1										3207
								F6 Alstom	254.927	262.353	7.426			21		14		17				2										3607
								F7 HMP	156.318	162.726	6.408			25		20		13				1										3435
								F-8 HMP Cements	25.603	27.210	1.607			4		6		3														778
								110KV ACC Wadi			1.607			6		9		2														728
								SBD Town	235.240	241.780	6.540			12		11		13														2167
Sub-Total (12)			**0**	**2**	**0**	**2**	**220**		**912.522**	**942.148**	**31.233**	**0**	**0**	**97**	**0**	**85**	**0**	**78**	**0**	**0**	**0**	**4**	**0**	**0**	**0**	**0**	**0**	**0**	**0**	**0**	**0**	**16265**
13	110/33/11 kV Jewargi	110/11 kV		2	1		40	JWG W/s	28.040	28.926	0.886			12		8		6														1404
								NARIBOL	154.346	156.979	2.633			17		16		7														2133
								RADDEWADGI	221.296	224.140	2.845			13		14		5														1707
								JEWARGI	488.764	492.269	3.505			19		21		21														**3898**
								KASARBOSGA	147.010	149.881	2.871			3		1																138
								ANDOLA	185.830	188.013	2.182			10		10		10														1880
Sub-Total (13)			**0**	**2**	**1**	**0**	**40**		**1225.285**	**1240.209**	**14.923**	**0**	**0**	**74**	**0**	**70**	**0**	**49**	**0**	**0**	**0**	**0**	**0**	**0**	**0**	**0**	**0**	**0**	**0**	**0**	**0**	**11160**
14	110/33/11 kV Mandewal	110/11 kV		2	1		40	MANDEWAL	40.016	41.101	1.085			6		10		9				1										1930
								BADNIHAL	26.949	28.570	1.621			6		12		8														1706
								HIPPARAGA SN	127.250	129.260	2.010			11		14		8				1										2207
								BELUR	71.121	72.145	1.024			17		5		7														1440
								YATNOOR	46.307	48.467	2.160			13		8		10														1829
Sub-Total (14)			**0**	**2**	**1**	**0**	**40**		**311.643**	**319.543**	**7.900**	**0**	**0**	**53**	**0**	**49**	**0**	**42**	**0**	**0**	**0**	**2**	**0**	**0**	**0**	**0**	**0**	**0**	**0**	**0**	**0**	**9112**
	110/33/11 kV							WACHA	0.148	0.29	0.142							2				1										450

Sl. No.	Name of PSS	Voltage Level	Power Transformer in Nos.				PTR Capacity in MVA	Name of Outgoing 11 kV Feeder	A	B	C = B-A			DISTRIBUTION TRANSFORMER DETAIL IN NOS.																	No. of HT Bulk	Total DTR Capacity in kVA (including Bulk)
			5 MVA	10 MVA	20 MVA	100 MVA			Initial Meter Readingin LU at 11 kV side of PSS	Final Meter Reading in LU at 11 kV side of PSS	Energy Consumption in LU (July'13)	10 KVA	15 KVA	25 KVA	50 KVA	63 KVA	80 KVA	100 KVA	150 KVA	160 KVA	200 KVA	250 KVA	300 KVA	315 KVA	400 KVA	500 KVA	630 KVA	750 KVA	990 KVA	HT Load in KVA		
15	110/33/11 kV Chittapur	110/11 kV		2	1		40	MALGHAN	8.616	10.268	1.652			14		11		4														1443
								KORWAR	8.078	9.306	1.228			22		7		3														1291
Sub-Total (15)			**0**	**2**	**1**	**0**	**40**				**3.022**	**0**	**0**	**36**	**0**	**18**	**0**	**9**	**0**	**0**	**0**	**1**	**0**	**0**	**0**	**0**	**0**	**0**	**0**	**0**	**3184**
16	110/11 kV Wadi	110/11 kV		2			20	Ingalgi	439.797	443.328	3.531			7		30		8														2865
								RAVOOR	65.6795	68.887	3.208			12		14		21														3282
								F-5 Halkatta	414.795	421.659	6.864			24		20		11														2960
Sub-Total (16)			**0**	**2**	**0**	**0**	**20**		**920.272**	**933.874**	**13.602**	**0**	**0**	**43**	**0**	**64**	**0**	**40**	**0**	**0**	**0**	**0**	**0**	**0**	**0**	**0**	**0**	**0**	**0**	**0**	**9107**
Gulbarga Division-II - Total [Sub-Total (1) to (16)]			**19**	**12**	**4**	**2**	**495**				**189.575**	**0**	**0**	**914**	**0**	**713**	**20**	**641**	**0**	**0**	**0**	**41**	**0**	**0**	**0**	**0**	**0**	**0**	**0**	**0**	**143404**
YADGIR DIVISION																																
1	Hattikuni	33/11 kV	2				10	Hattikuni F-1	0.500	0.901	0.401			21		11		2														1418
								Allipur F-2	4.930	6.281	1.351			25		3																814
								Bachwar F-3	96.940	98.899	1.959			30		6																1128
								K. Shahapur F-5	5.028	18.100	13.072			8		5																515
								Hongera F-6	0.925	2.195	1.270			31		23																2224
	Sub-Total (1)		**2**	**0**	**0**	**0**	**10**		**108.324**	**126.376**	**18.053**	**0**	**0**	**115**	**0**	**48**	**0**	**2**	**0**	**0**	**0**	**0**	**0**	**0**	**0**	**0**	**0**	**0**	**0**	**0**	**6099**
2	Ballichakra	33/11 kV	2				10	Mailapur F-4	19.134	20.840	1.707			4		10																730
								Killankera F-1	32.554	35.335	2.781			27		5		2														1190
								Balichakra F-2	225.347	226.874	1.527			15		14		1														1357
	Sub-Total (2)		**2**	**0**	**0**	**0**	**10**		**277.035**	**283.049**	**6.014**	**0**	**0**	**46**	**0**	**29**	**0**	**3**	**0**	**0**	**0**	**0**	**0**	**0**	**0**	**0**	**0**	**0**	**0**	**0**	**3277**
3	Jaigram	33/11 kV	2				10	Nandepalli F-1	45.834	48.614	2.780			18		4		12														1902
								Azalapur F-2	105.036	106.105	1.069					18		4														1534
								Jaigram F-5	21.165	22.335	1.170			9		7		1														766
	Sub-Total (3)		**2**	**0**	**0**	**0**	**10**		**172.034**	**177.054**	**5.020**	**0**	**0**	**27**	**0**	**29**	**0**	**17**	**0**	**0**	**0**	**0**	**0**	**0**	**0**	**0**	**0**	**0**	**0**	**0**	**4202**
4	Gajarkot	33/11 kV	2				10	Gajarakot			2.130			5		5		2														640
								Borbanda F-6	6.398	9.018	2.620			4		9		8														1467
								Chapetla			1.470			9		13		2														1244
								Chintakunta			1.250			11		20		2														1735
								Rampur	102.864	108.448	5.584			13		10		2														1155
								Bahar Pet			1.840			17		19		9														2522
								Industrial			2.130			14		11		17														2743
								Railway station			2.050			15		17		9														2346
								Diggaon Satnoor			1.080			11		9		4														1242
								Dandoti			1.460			17		12		8														1981
	Sub-Total (4)		**2**	**0**	**0**	**0**	**10**		**109.262**	**117.466**	**21.614**	**0**	**0**	**116**	**0**	**125**	**0**	**63**	**0**	**0**	**0**	**0**	**0**	**0**	**0**	**0**	**0**	**0**	**0**	**0**	**17075**
5	Thanagundi	33/11 kV	2				10	Hadagi Mudra			4.380			18		13		2														1469
								Thanagundi			3.140			11		1																338
	Sub-Total (5)		**2**	**0**	**0**	**0**	**10**		**0.000**	**0.000**	**7.520**	**0**	**0**	**29**	**0**	**14**	**0**	**2**	**0**	**0**	**0**	**0**	**0**	**0**	**0**	**0**	**0**	**0**	**0**	**0**	**1807**

Sl. No.	Name of PSS	Voltage Level	Power Transformer in Nos.				PTR Capacity in MVA	Name of Outgoing 11 kV Feeder	A	B	C = B-A			DISTRIBUTION TRANSFORMER DETAIL IN NOS.																	No. of HT Bulk	Total DTR Capacity in kVA (including Bulk)
			5 MVA	10 MVA	20 MVA	100 MVA			Initial Meter Readingin LU at 11 kV side of PSS	Final Meter Reading in LU at 11 kV side of PSS	Energy Consumption in LU (July'13)	10 KVA	15 KVA	25 KVA	50 KVA	63 KVA	80 KVA	100 KVA	150 KVA	160 KVA	200 KVA	250 KVA	300 KVA	315 KVA	400 KVA	500 KVA	630 KVA	750 KVA	990 KVA	HT Load in KVA		
6	Gogi	33/11 kV	1				5	Gogi			5.800			9		7																666
								Madriki			3.800			17		6																803
								Ukkinal			3.450			14		4																602
								Wondurga			3.400			2		4																302
	Sub-Total (6)		**1**	**0**	**0**	**0**	**5**		**0.000**	**0.000**	**16.450**	**0**	**0**	**42**	**0**	**21**	**0**	**0**	**0**	**0**	**0**	**0**	**0**	**0**	**0**	**0**	**0**	**0**	**0**	**0**	**2373**
7	Sagar	33/11 kV	1				5	Sagar			2.460			11		9		7														1542
								Shetgera			3.800			4		8		13														1904
	Sub-Total (7)		**1**	**0**	**0**	**0**	**5**		**0.000**	**0.000**	**6.260**	**0**	**0**	**15**	**0**	**17**	**0**	**20**	**0**	**0**	**0**	**0**	**0**	**0**	**0**	**0**	**0**	**0**	**0**	**0**	**3446**
8	Wadgera	33/11 kV	2				10	Channur			3.400			8		5		19				1										2665
								Wadigera			3.800			6		1																213
								Naikal			2.040			19		2																601
								Bilhar			2.090			9		14																1107
								Halgera			3.100			8		12		16				1										2806
	Sub-Total (8)		**2**	**0**	**0**	**0**	**10**		**0.000**	**0.000**	**14.430**	**0**	**0**	**50**	**0**	**34**	**0**	**35**	**0**	**0**	**0**	**2**	**0**	**0**	**0**	**0**	**0**	**0**	**0**	**0**	**7392**
9	Hunsagi	33/11 kV	2				10	B.Salwadgi			6.010			24		31		19				3										5203
								Gundalgera			2.065			18		12		10				1										2456
								Industrial			3.840			16		13		11														2319
								Hunsagi			8.890		4	131		119		30				2										14332
	Sub-Total (9)		**2**	**0**	**0**	**0**	**10**		**0.000**	**0.000**	**20.805**	**0**	**4**	**189**	**0**	**175**	**0**	**70**	**0**	**0**	**0**	**6**	**0**	**0**	**0**	**0**	**0**	**0**	**0**	**0**	**24310**
10	Kakkera	33/11 kV	1				5	Kakkera			2.305			19		21		8														2598
								Tintani			2.210			14		16		12														2558
								Devatkal			3.650			13		10		8														1755
	Sub-Total (10)		**1**	**0**	**0**	**0**	**5**		**0.000**	**0.000**	**8.165**	**0**	**0**	**46**	**0**	**47**	**0**	**28**	**0**	**0**	**0**	**0**	**0**	**0**	**0**	**0**	**0**	**0**	**0**	**0**	**6911**
11	Bendegumbli	33/11 kV	2				10	Kadrapura			2.840			2		2		1														276
								Bendegumbali			3.300			12		8		8				1										1854
								Tumkur			1.880			7		4		9														1327
								Sangam			4.100					9		13				2										2367
	Sub-Total (11)		**2**	**0**	**0**	**0**	**10**		**0.000**	**0.000**	**12.120**	**0**	**0**	**21**	**0**	**23**	**0**	**31**	**0**	**0**	**0**	**3**	**0**	**0**	**0**	**0**	**0**	**0**	**0**	**0**	**5824**
12	Pet-Ammapur	33/11 kV	2				10	Pet-ammapur			4.080			19		15		11														2520
								Wagangera			2.150			10		8		7														1454
	Sub-Total (12)		**2**	**0**	**0**	**0**	**10**		**0.000**	**0.000**	**6.230**	**0**	**0**	**29**	**0**	**23**	**0**	**18**	**0**	**0**	**0**	**0**	**0**	**0**	**0**	**0**	**0**	**0**	**0**	**0**	**3974**
13	33/11 KV Gurmitkal	33/11 kV	1				5	Chanderki F-1	18.846	24.418	5.572			12		11		2														1193
								Gurmitkal F-2	23.088	28.026	4.938			5		1		1				1										538
								Motakpalli			2.940			37		20		11														3285
	Sub-Total (13)		**1**	**0**	**0**	**0**	**5**		**41.934**	**52.444**	**13.450**	**0**	**0**	**54**	**0**	**32**	**0**	**14**	**0**	**0**	**0**	**1**	**0**	**0**	**0**	**0**	**0**	**0**	**0**	**0**	**5016**

Sl. No.	Name of PSS	Voltage Level	Power Transformer in Nos.				PTR Capacity in MVA	Name of Outgoing 11 kV Feeder	A	B	C = B-A			DISTRIBUTION TRANSFORMER DETAIL IN NOS.																	No. of HT Bulk	Total DTR Capacity in kVA (including Bulk)
			5 MVA	10 MVA	20 MVA	100 MVA			Initial Meter Readingin LU at 11 kV side of PSS	Final Meter Reading in LU at 11 kV side of PSS	Energy Consumption in LU (July'13)	10 KVA	15 KVA	25 KVA	50 KVA	63 KVA	80 KVA	100 KVA	150 KVA	160 KVA	200 KVA	250 KVA	300 KVA	315 KVA	400 KVA	500 KVA	630 KVA	750 KVA	990 KVA	HT Load in KVA		
14	33/11 KV Saidapur	33/11 kV		2			20	Saidapur	105.258	108.126	2.868			10		3																439
								Baddepalli F-1	357.608	362.996	5.388			13		9		11														1992
								Badiyal F-2	116.284	117.2	0.916			4		7		3														
								Madwar F-3	174.742	179.18	4.438			13		16																1333
								Royalseema F-1	12.434	12.65	0.216			4		8		5														1104
								Kadechur F-11	34.924	38.25	3.326			11		7		13														2016
								Lingeri F-14	57.758	61.854	4.096			19		21		9														2698
	Sub-Total (14)		**0**	**2**	**0**	**0**	**20**		**859.008**	**880.256**	**21.248**	**0**	**0**	**74**	**0**	**71**	**0**	**41**	**0**	**0**	**0**	**0**	**0**	**0**	**0**	**0**	**0**	**0**	**0**	**0**	**9582**
15	110/33/ 11KV Shahapur	110/11 kV						Shahapur			6.500			15		21		6				2										2798
								Halisagar			6.100			25		12		10				3										3131
								Rakamgera			6.200			12		25		9				2										3275
								B.Gudi			5.720			12		14		9				1										2332
	Sub-Total (15)		**0**	**0**	**0**	**0**	**0**		**0.000**	**0.000**	**24.520**	**0**	**0**	**64**	**0**	**72**	**0**	**34**	**0**	**0**	**0**	**8**	**0**	**0**	**0**	**0**	**0**	**0**	**0**	**0**	**11536**
16	220/110/33/ 11KV Hattigudur	110/11 kV		2	1	2	240	Khanapur			2.600			12		11		5														1493
								Kannekollur			2.800			14		15		9														2195
								Hattigudur			3.400			21		1		11														1688
								Sirwal			3.600			20		5		14														2215
								Maddraki			4.500			16		24		10				1										3162
	Sub-Total (16)		**0**	**2**	**1**	**2**	**240**		**0.000**	**0.000**	**16.900**	**0**	**0**	**83**	**0**	**56**	**0**	**49**	**0**	**0**	**0**	**1**	**0**	**0**	**0**	**0**	**0**	**0**	**0**	**0**	**10753**
17	110/33/ 11 KV Shorapur	110/11 kV		1	1		30	Krishnapur			5.430			27		15		14				3										3770
								Havinal			7.890			31		21		11				2										3698
								Karnal			2.515			16		14		9														2182
								Town			10.250			21		25		17				3										4550
								Rangampet			5.542			14		20		18														3410
								Water Supply			2.174			19		6		11														1953
	Sub-Total (17)		**0**	**1**	**1**	**0**	**30**		**0.000**	**0.000**	**33.801**	**0**	**0**	**128**	**0**	**101**	**0**	**80**	**0**	**0**	**0**	**8**	**0**	**0**	**0**	**0**	**0**	**0**	**0**	**0**	**19563**
18	110/33/11 KV Kembhavi	110/11 kV		1	1		30	Nagnoor			3.013			25		17		21				1										4046
								Kembhavi			4.090		1	135		79		30				1		1								11932
								Dasimayya			1.314			13		17		7				1										2346
								Parasanhalli			4.062			14		19		24				2										4447
								Industrial			0.251			3		5		1														490
								Yalagi			0.390			9		6		8														1403
	Sub-Total (18)		**0**	**1**	**1**	**0**	**30**		**0.000**	**0.000**	**13.120**	**0**	**1**	**199**	**0**	**143**	**0**	**91**	**0**	**0**	**0**	**5**	**0**	**1**	**0**	**0**	**0**	**0**	**0**	**0**	**24664**
19	110/33/11 KV Yadgir	110/11 kV		2	1		40	Town F-1	583.180	585.418	2.238			19		8		4				1										1629
								Rly.Station F-2	625.702	630.676	4.974			10		11		17				2										3143
								Industrial F-3	519.842	530.092	10.250			25		14		20				3										4257
								Laxmi Nagar F-5	580.512	587.070	6.558			20		13		15														2819
								H.Madra F-6	622.906	624.876	1.970			7		5		4														890
								Mailapur F-7	609.008	614.998	5.990			21		12		19														3181
								Sawoor F-8	681.180	688.260	7.080			16		8		2														1104
	Sub-Total (19)		**0**	**2**	**1**	**0**	**40**		**4222.330**	**4261.390**	**39.060**	**0**	**0**	**118**	**0**	**71**	**0**	**81**	**0**	**0**	**0**	**6**	**0**	**0**	**0**	**0**	**0**	**0**	**0**	**0**	**17023**

Sl. No.	Name of PSS	Voltage Level	Power Transformer in Nos.				PTR Capacity in MVA	Name of Outgoing 11 kV Feeder	A	B	C = B-A			DISTRIBUTION TRANSFORMER DETAIL IN NOS.																	No. of HT Bulk	Total DTR Capacity in kVA (including Bulk)
			5 MVA	10 MVA	20 MVA	100 MVA			Initial Meter Readingin LU at 11 kV side of PSS	Final Meter Reading in LU at 11 kV side of PSS	Energy Consumption in LU (July'13)	10 KVA	15 KVA	25 KVA	50 KVA	63 KVA	80 KVA	100 KVA	150 KVA	160 KVA	200 KVA	250 KVA	300 KVA	315 KVA	400 KVA	500 KVA	630 KVA	750 KVA	990 KVA	HT Load in KVA		
20	110/33/11 KV Konkal	110/11 kV		1	1		30	Kandakur F-1	487.566	487.746	0.180			18		15		1														1495
								Chinnakar--F2	113.410	113.420	0.010			13		11		4														1418
								Minaspur F-3	316.319	316.432	0.113			8		6		7														1278
								Anpur F-6	53.149	53.342	0.193			7		6		4														953
								Darmapur F-4	415.323	415.454	0.131			10		6																628
								Yelheri F-2	4810.880	4814.260	3.380			1		12		2														981
	Sub-Total (20)		**0**	**1**	**1**	**0**	**30**		**6196.647**	**6200.654**	**4.007**	**0**	**0**	**57**	**0**	**56**	**0**	**18**	**0**	**0**	**0**	**0**	**0**	**0**	**0**	**0**	**0**	**0**	**0**	**0**	**6753**
	Yadgir Division Total [Sub-Total (1) to (20)]		**22**	**9**	**5**	**2**	**500**				**308.786**	**0**	**5**	**1502**	**0**	**1187**	**0**	**697**	**0**	**0**	**0**	**40**	**0**	**1**	**0**	**0**	**0**	**0**	**0**	**0**	**0**	**191580**
SEDEM DIVISION																																
1	33/11 KV Nidagunda	**33/11 kV**	**2**				**10**	Sirolli			0.955			14		7		8														1591
								Karchkhed feeder			0.314			11		4		6														1127
								Nidgunda feeder			0.697			9		8		7														1429
	Sub-Total (1)		**2**	**0**	**0**	**0**	**10**		**0.000**	**0.000**	**1.966**	**0**	**0**	**34**	**0**	**19**	**0**	**21**	**0**	**0**	**0**	**0**	**0**	**0**	**0**	**0**	**0**	**0**	**0**	**0**	**4147**
2	33/11 KV Konchwaram	**33/11 kV**	**1**				**5**	Konchawaram			6.228			16		35		26														5205
								Shadipur			4.214			22		26		21														4288
								Venktapur			2.466		**1**	17		28		9														3104
	Sub-Total (2)		**1**	**0**	**0**	**0**	**5**		**0.000**	**0.000**	**12.908**	**0**	**1**	**55**	**0**	**89**	**0**	**56**	**0**	**0**	**0**	**0**	**0**	**0**	**0**	**0**	**0**	**0**	**0**	**0**	**12597**
3	Sulepeth	33/11 kV	**2**				10	F1 Nidgunda			3.314			22		25		16														3725
								F2 Sulepeth			2.730			7		10		6														1405
								Hodebeernalli			4.228			27		11		9														2268
								Gadikeshwar			1.440			14		10		8														1780
								F4-Mogha			1.340			12		15		5														1745
								F-5 Birnalli			3.334			24		21		18														3723
								Exp. Fedeer			2.654			13		20		9														2485
	Sub-Total (3)		**2**	**0**	**0**	**0**	**10**		**0.000**	**0.000**	**19.039**	**0**	**0**	**119**	**0**	**112**	**0**	**71**	**0**	**0**	**0**	**0**	**0**	**0**	**0**	**0**	**0**	**0**	**0**	**0**	**17131**
4	Chimmanchod	33/11 kV	2				10	F1 Chimmanchode	177.2518	180.1264	2.875			12		15		10				1										2495
								F2 Hasaragundagi	296.118	301.2256	5.108			13		14		4														1607
								F3 Basanthpur	127.9727	130.1847	2.212			13		15		4														1670
	Sub-Total (4)		**2**	**0**	**0**	**0**	**10**		**601.343**	**611.537**	**10.194**	**0**	**0**	**38**	**0**	**44**	**0**	**18**	**0**	**0**	**0**	**1**	**0**	**0**	**0**	**0**	**0**	**0**	**0**	**0**	**5772**
5	Miryan	33/11 kV	2				10	Kallur Road	137.9816	147.6262	9.645		**1**	21		97		52														11851
								Miriyan	182.4636	186.9034	4.440			25		18		21														3859
	Sub-Total (5)		**2**	**0**	**0**	**0**	**10**		**320.445**	**334.530**	**14.084**	**0**	**1**	**46**	**0**	**115**	**0**	**73**	**0**	**0**	**0**	**0**	**0**	**0**	**0**	**0**	**0**	**0**	**0**	**0**	**15710**
6	Ratakal	33/11 kV	1				5	F1 Ratkal			4.913			30		24		17														3962
								F2 Heroor			**3.560**			16		5		3														1015
								F3 Chndankera			1.844			32		30		7														3390
								F4 Mukramba			0.869			7		6		3														853
	Sub-Total (6)		**1**	**0**	**0**	**0**	**5**		**0.000**	**0.000**	**11.185**	**0**	**0**	**85**	**0**	**65**	**0**	**30**	**0**	**0**	**0**	**0**	**0**	**0**	**0**	**0**	**0**	**0**	**0**	**0**	**9220**

Sl. No.	Name of PSS	Voltage Level	Power Transformer in Nos.				PTR Capacity in MVA	Name of Outgoing 11 kV Feeder	A	B	C = B-A			DISTRIBUTION TRANSFORMER DETAIL IN NOS.																	No. of HT Bulk	Total DTR Capacity in kVA (including Bulk)
			5 MVA	10 MVA	20 MVA	100 MVA			Initial Meter Readingin LU at 11 kV side of PSS	Final Meter Reading in LU at 11 kV side of PSS	Energy Consumption in LU (July'13)	10 KVA	15 KVA	25 KVA	50 KVA	63 KVA	80 KVA	100 KVA	150 KVA	160 KVA	200 KVA	250 KVA	300 KVA	315 KVA	400 KVA	500 KVA	630 KVA	750 KVA	990 KVA	HT Load in KVA		
7	Malkhed	33/11 kV	2				10	Malkhed			1.560			12		5		9														1515
								EHT-HTP-17			9.660																					0
								EHT-HTP-14			9.470																					0
								HT-HTP-15			0.760																					0
								HTP-8 W/s			1.117																					0
								Stn. T. Malkhed			1.587			4		6		7														1178
	Sub-Total (7)		**2**	**0**	**0**	**0**	**10**		**0.000**	**0.000**	**24.154**	**0**	**0**	**16**	**0**	**11**	**0**	**16**	**0**	**0**	**0**	**0**	**0**	**0**	**0**	**0**	**0**	**0**	**0**	**0**	**2693**
8	Mudhol	33/11 kV	**2**				10	Mudhol			2.088			4		10		2				1										1180
								Adki			2.481			5		10																755
								Madana			8.216			40		73		11														6699
								Khandrayanpalliy			8.053			30		56		8														5078
								chandapur			0.840			28		40		2														3420
	Sub-Total (8)		**2**	**0**	**0**	**0**	**10**		**0.000**	**0.000**	**21.678**	**0**	**0**	**107**	**0**	**189**	**0**	**23**	**0**	**0**	**0**	**1**	**0**	**0**	**0**	**0**	**0**	**0**	**0**	**0**	**0**	**17132**
9	Kodla	33/11 kV	2				10	Kodla			1.435			4		4		4				1										1002
								Handriki			1.531			18		6		3														1128
								Gundhalli			1.251			12		16		5														1808
								Bajaj			0.302					5																315
								Alloli+Benakpalli			1.132			12		4		9														1452
	Sub-Total (9)		**2**	**0**	**0**	**0**	**10**		**0.000**	**0.000**	**5.651**	**0**	**0**	**46**	**0**	**35**	**0**	**21**	**0**	**0**	**0**	**1**	**0**	**0**	**0**	**0**	**0**	**0**	**0**	**0**	**0**	**5705**
10	220/110 KV Batgera	110/11 kV				2	200	Vicat Sagar Cement Exp			8.477																					**0**
	Sub-Total (10)		**0**	**0**	**0**	**2**	**200**		**0.000**	**0.000**	**8.477**	**0**	**0**	**0**	**0**	**0**	**0**	**0**	**0**	**0**	**0**	**0**	**0**	**0**	**0**	**0**	**0**	**0**	**0**	**0**	**0**
11	Chincholi	110/11 kV		1	1		30	Chincholi	1028.912	1034.506	2.590			8		11		20				3										**3643**
								Anwar	305.310	307.807	2.497			13		6		10				1										1953
								Ainoli	385.935	391.841	3.910		1	35		31		19														4743
								Old Sulepeth	144.425	146.005	1.580		1	17		10		6														1670
								Chettinadu Exp			5.960			28		31		17				6										5853
	Sub-Total (11)		**0**	**1**	**1**	**0**	**30**		**1864.581**	**1880.158**	**16.537**	**0**	**2**	**101**	**0**	**89**	**0**	**72**	**0**	**0**	**0**	**10**	**0**	**0**	**0**	**0**	**0**	**0**	**0**	**0**	**0**	**17862**
13	Kurukunta	110/11 kV		1			10	Kurkunta			1.263			13		9		10														1892
								Sompally			1.249			15		7		4														1216
								Industrial			1.672			8		15		4														1545
	Sub-Total (13)		**0**	**1**	**0**	**0**	**10**		**0.000**	**0.000**	**4.184**	**0**	**0**	**36**	**0**	**31**	**0**	**18**	**0**	**0**	**0**	**0**	**0**	**0**	**0**	**0**	**0**	**0**	**0**	**0**	**0**	**4653**

Sl. No.	Name of PSS	Voltage Level	Power Transformer in Nos.				PTR Capacity in MVA	Name of Outgoing 11 kV Feeder	A	B	C = B-A			DISTRIBUTION TRANSFORMER DETAIL IN NOS.																	No. of HT Bulk	Total DTR Capacity in kVA (including Bulk)
			5 MVA	10 MVA	20 MVA	100 MVA			Initial Meter Readingin LU at 11 kV side of PSS	Final Meter Reading in LU at 11 kV side of PSS	Energy Consumption in LU (July'13)	10 KVA	15 KVA	25 KVA	50 KVA	63 KVA	80 KVA	100 KVA	150 KVA	160 KVA	200 KVA	250 KVA	300 KVA	315 KVA	400 KVA	500 KVA	630 KVA	750 KVA	990 KVA	HT Load in KVA		
14	220/110/11 KV Sedam	220/110/11KV		2		2	220	Sedam			9.076			11		21		24				10										6498
								Jakatiya			2.500					1										1						563
								Betagera			2.475			23		18		9														2609
								W/S F/Bed			2.025			11		4		6				1										1377
								Sirolli			0.379			13		12		8				1										2131
								Mugnoor			1.640			33		25		5														2900
								EHT-HTP-3 (Bulk)			20.410																					
								HT-HTP-16			0.297																					0
	Sub-Total (14)		**0**	**2**	**0**	**2**	**220**		**0.000**	**0.000**	**38.802**	**0**	**0**	**91**	**0**	**81**	**0**	**52**	**0**	**0**	**0**	**12**	**0**	**0**	**0**	**1**	**0**	**0**	**0**	**0**	**0**	**16078**
	Sedem Division Total [Sub-Total (1) to (14)]		**16**	**4**	**1**	**4**	**540**				**188.860**	**0**	**4**	**774**	**0**	**880**	**0**	**471**	**0**	**0**	**0**	**25**	**0**	**0**	**0**	**1**	**0**	**0**	**0**	**0**	**0**	**128700**
	GULBARGA CIRCLE TOTAL (11 kV Side) INPUT ENERGY										**1233.046**	**3**	**375**	**4801**	**0**	**4447**	**21**	**3304**	**0**	**0**	**0**	**407**	**0**	**1**	**0**	**21**	**0**	**1**	**0**	**0**	**0**	**858854**

11 kV FEEDERS DETAIL
WITH DTR CAPACITY
OF
CHIKKODI CIRCLE
IN
KARNATAKA STATE

STUDY ON COMPONENT-WISE AT&C LOSSES ASSESSMENT FOR THE STATE OF KARNATAKA

B. 11 kV FEEDERS DETAILSWITH DTR CAPACITY OF CHIKKODI CIRCLE

Sl. No.	Name of Division	Name of GSS	Voltage Level	Power Transformer in nos.			PTR Capacity in MVA	Name of Outgoing 11 kV feeder	A	B	C=B-A	DISTRIBUTION TRANSFORMER DETAIL IN NOS.											NO OF HT BULK	TOTAL DTR CAPACITY IN KVA (Including Bulk)
				5 MVA	10 MVA	20 MVA			Initial meter in LU reading at 11 KV side PSS	Final meter reading in LU at 11 KV side PSS	Energy Consumption in LU (July '13)	10 KVA	15 KVA	25 KVA	63 KVA	100 KVA	150KVA	250 KVA	500 KVA	630 KVA	990 KVA	HT Load in KVA		
1	Athani	110/33/11KV MUSS ATHANI	110/33/11KV			4	80	ATHANI-I	505.20	507.79	2.59			4	7	29		1						3691
								ATHANI-II	630.21	636.02	5.81				2	9	32							1026
								F -2 Crusher	445.01	445.64	0.63			1	6	2		2						1103
								Gundewadi	491.69	493.93	2.24			29	13	19								3444
								YENKANCHI	2946.88	2949.42	2.54			10	20	11								
								KATAGERI	498.76	502.13	3.36			26	16	19								
								Masaraguppi	513.56	515.47	1.92			27	14	16								3157
								Tangadi	704.47	706.05	1.58			24	13	11								2519
2	Athani	33/11KV MUSS NANDAGAV	33/11KV	2			10	Nandagav	66.11	66.98	0.87			4	2	5								2105
								Ghatanatti	609.08	613.40	4.32			15	9	29		2						4342
								Savadi Darga	5.97	7.70	1.73			7	15	14								2520
								KOKATANUR	28.44	31.19	2.75			35	42	17								
								Nandagav Garden	186.24	191.62	5.38			14	18	36								5084
								Renuka Sugar HT	116.52	118.59	2.07													0
3	Athani	33/11KV MUSS SHIRAHATTI	33/11KV	2			10	Savadi			2.27			11	19	23								3772
								SHIRAHATTI			4.75			27	32	26								
								ZUNJARWAD	927.39	935.40	8.01			43	60	31								
								BALAWAD			3.54			30	40	20								
4	Athani	220/110/11 KV Athani	220/110/11 KV		1		10	F-3 HBC	86.23	88.60	2.38			17	10	8		1						#REF!
								F-4 Bus Stand	115.62	119.59	3.97			6	8	6		4						2254
								Millenium starch	4.49	8.85	4.36			34	40	24								5770
5	Athani	110/33/11 KV MUSS Satti	66/11 KV		2	1	40	Savadi			4.03			29	34	21								4967
								Nandeshwar			4.65			37	44	27								6397
								Satti-1			4.13			31	30	29								5565
								Satti-2			4.96			36	40	13								4720
								Shegunshi			4.57			38	34	16								4692
								Dodawad			4.33			22	38	17								4644
								Radderatti			4.34			39	30	21								4965
								Satti Garden			4.18			31	29	20								4602
6	Athani	110/11 KV Baligeri	110/11 KV		1		10	Kiranagi	105.75	109.68	3.93			32	34	24								5342
								Balligeri	165.46	167.38	1.92			27	30	19								4465
								Anantapur	70.39	71.59	1.20			25	15	11								2670
7	Athani	33/11 Muragundi	33/11 KV	2			10	Power loom	0.14	0.36	0.22			12	9	4								1267
								Muragundi	17.33	17.61	0.28			8	8	7								1404
								Dearaddearatti	32.52	34.55	2.03			30	24	16								3862
								HT LIS	20.26	21.83	1.57													0
8	Athani	33/11 KV MUSS SATTI	33/11 KV	2			10	Maheshawadagi			3.71			30	25	21								4425
								Janawad	8.22	8.88	0.66			4	9	6								1267
								Water Supply	0.97	0.97	0.00													0

Sl. No.	Name of Division	Name of GSS	Voltage Level	Power Transformer in nos.			PTR Capacity in MVA	Name of Outgoing 11 kV feeder	A	B	C=B-A	DISTRIBUTION TRANSFORMER DETAIL IN NOS.											NO OF HT BULK	TOTAL DTR CAPACITY IN KVA (Including Bulk)
				5 MVA	10 MVA	20 MVA			Initial meter in LU reading at 11 KV side PSS	Final meter reading in LU at 11 KV side PSS	Energy Consumption in LU (July '13)	10 KVA	15 KVA	25 KVA	63 KVA	100 KVA	150KVA	250 KVA	500 KVA	630 KVA	990 KVA	HT Load in KVA		
9	Athani	33/11 KV MUSS KOLIGUDD	33/11 KV	2			10	Shegunshi			0.91			12	14	3								1482
								Khawatakoppa			6.38			38	32	24								5366
								Sankratti			4.55			32	21	19								4023
10	Athani	33/11 KV MUSS HALYAL	33/11 KV	2			10	Naganur P K	466.73	468.39	1.67			12	18	13								2734
								Awarakhod	564.38	567.01	2.62			34	12	17								3306
								Nadiingalagav	1056.00	1059.39	3.39			28	22	18								3886
								River Bed	637.74	639.28	1.53			18	14	12								2532
								Darur+Karalatti	69.24	70.29	1.05			30	24	19								4162
								KSSKN Factory			2.33			23	19	9								2672
11	Athani	33/11 KV MUSS Sankonatti	33/11 KV	2			10	Hulagabali			6.83			42	38	23								5744
								Ramawadi			7.29			40	35	19								5105
								Sankonatti	300.33	303.10	2.76			17	23	11								2974
								Water Supply	169.11	170.61	1.49													0
12	Athani	33/11 KV MUSS JAMBAGI	33/11 KV	2			10	Hanamapur+Madhabhav	771.86	774.86	3.00			26	30	22								4740
								Jakkaratti	57.92	59.01	1.09			13	11	16								2618
								Pandegaon			1.82			16	13	14								2619
								Khilegaon			1.83			12	8	13								2104
								Naganuar	102.22	103.88	1.66			11	8	17								2479
								Tavanshi			1.36			21	13	9								2244
								Kaluti+Shivanur	103.94	105.10	1.16			18	8	12								2154
13	Athani	110 KV MUSS Ugar	110/11 KV		2	1	40	JACKWELL	452.79	456.58	3.78			7	16	11		0					3	2283
								KUSANAL EXP.	647.36	651.82	4.46			18	14	19		1					1	3482
								KUSANAL	1079.86	1085.96	6.10			8	10	14		1						2480
								MANGSULI OLD	826.44	828.56	2.12			6	27	18								3651
								PARMESHWARWADI	102.01	107.70	5.69			11	38	28		1						5719
								LAXMI	1.10	1.11	0.01			4	2	5								726
								UGAR KH.	1338.84	1349.08	10.24			3	15	15		2						3020
								KRISHANA	278.13	282.06	3.93			9	21	19		5						4698
14	Athani	33 KV MUSS Mangasuli	33/11 KV	2			10	MALLAYYA	46.69	49.00	2.31			5	16	10								2133
								LOKUR			2.00			14	11	18								2843
								KALLAL	61.93	64.19	2.26			25	19	21								3922
								F-NJY	17.27	18.65	1.38			9	15	14								2570
								MANGSULI NEW	2.67	2.69	0.02			8	13	11								2119
15	Athani	33/11 KV MUSS KAGWAD	33/11 KV	2			10	Kagawad Town			2.40			39	24	10		1						3737
								BALESHWAR			1.80			24	11	13								2593
								RLY.STATION			0.70			1	9	6								1192
								KRISHANA			2.60			9	21	19		5						4698
								LIFT			1.10			5	12	6								1481
								WATER SUPPLY			0.20			4	2			6						1726
								KAVERI			2.80			18	24	14								3362
								Shedabal			0.80			3	19	8								2072
16	Athani	33/11 KV SHIRAGUPPI	33/11 KV	2			10	JUGUL			4.60			4	21	32								4623
								SHIRGUPPI			4.10			11	22	31		3						5511
								SHEDABAL IP-I			2.80			30	26	24		3						5538

Sl. No.	Name of Division	Name of GSS	Voltage Level	Power Transformer in nos.			PTR Capacity in MVA	Name of Outgoing 11 kV feeder	A	B	C=B-A	DISTRIBUTION TRANSFORMER DETAIL IN NOS.											NO OF HT BULK	TOTAL DTR CAPACITY IN KVA (Including Bulk)
				5 MVA	10 MVA	20 MVA			Initial meter in LU reading at 11 KV side PSS	Final meter reading in LU at 11 KV side PSS	Energy Consumption in LU (July '13)	10 KVA	15 KVA	25 KVA	63 KVA	100 KVA	150KVA	250 KVA	500 KVA	630 KVA	990 KVA	HT Load in KVA		
17	Athani	33/11 KV SHEDBAL	33/11 KV	2			10	SHEDBAL			1.70			11	18	15								2909
								BHUJGOUDAR	0.63	0.65	0.02			4	13	3								1219
								DHONDI MADDI	0.14	0.15	0.01			2	9	1								717
								MAYAKKA	0.87	0.91	0.04			10	7	4								1091
								PIPE FACTORY	0.01	0.01	0.00													0
18	Athani	110 KV MUSS AINAPUR	110/11 KV		1	1	30	AINAPUR+ MDV WS	94.70	99.21	4.51		5	10	6	7		3						2153
								BANAJAWAD	97.10	102.41	5.31			3	23	9		1						2674
								HUVINAKODI	684.67	689.37	4.69			12	35	20								4505
								JAYANTI NAGER	142.76	148.10	5.34			4	10	24								3130
								KATRAL	573.41	573.80	0.40			8	30	7								2790
								JAI HANUMAN	844.02	849.35	5.33			11	8	24								3179
								SIDDESHWAR MALAGI	182.33	187.40	5.07			4	20	13								2660
								K.KITTUR	299.41	301.22	1.81			5	17	4								1596
								MOLE	606.51	610.54	4.02			26	50	3		1						4350
								SAPTASAGAR	538.91	543.87	4.96			13	8	10			1					2329
								BARIGADDI	79.28	84.29	5.01			12	6	30								3678
								NAVALIHAL	0.52	0.57	0.05			24	40	7								3820
19	Athani	110/11 KV MUSS AIGALI	110/11 KV		2		20	DESAIRATTI	137.15	137.15	2.56			15	24	12								
								ADAHALLI	759.51	759.51	3.25			26	44	23		1						
								KOHALLI	130.36	130.36	3.86			13	34	30								
								TELASANG	496.27	495.98	5.02			50	33	12								
								KOKATANUR(Exp)	1286.95	1286.95	4.06			20	28	15								
								BADAGI	871.94	870.52	3.35			20	23	7								
								RAMATHIRTH	831.28	831.19	1.86			32	20	15								
								KAKAMARI	947.03	946.64	4.28			75	42	12								
								AIGALI (Rural)	572.07	571.99	3.71			25	20	12								
								AIGALI (Village)	377.96	377.88	0.28			8	2	6	1							
								ZUNJARWAD W/S	174.56	174.56	0.58							2						
								Bannur	69.26	69.26	1.29			24	42	17								
Athani Division Total [Sub-Total 1 to 19]					**6**	**6**	**290**				**323.05**		**5**	**1672**	**1890**	**1464**		**43**	**1**	**0**	**0**	**0**	**4**	**318595**
1	Chikkodi	110/33/11/CHIKODI	33/11 KV		2	2	60	9) Chikkodi (U)-I	483.94	489.76	5.82		0	5	25	35		2	1					6200
								5) Chikkodi (U)-II	530.54	537.53	6.99		0	14	20	36		2						5710
								10) Chikkodi (Jack)	479.66	483.26	3.60		0	5	1	6		3	1					2038
								1) Karoshi (R)			1.19			6	23	7								2299
								2) Karagoan(R)			1.60		1	18	25	12								3240
								3) Hanchinal (R)	394.02	396.88	2.86			10	29	16								3677
								4) Kerur ®			0.34			6	25	8								2525
								6) Hirekodi (R)			0.61			15	28	14								3539
								7) Kothali			0.35			30	45	14								4985
								8)Jainapur +Majalatti	374.14	378.40	4.26		2	13	21	9								2578

Sl. No.	Name of Division	Name of GSS	Voltage Level	Power Transformer in nos.			PTR Capacity in MVA	Name of Outgoing 11 kV feeder	A	B	C=B-A	DISTRIBUTION TRANSFORMER DETAIL IN NOS.											NO OF HT BULK	TOTAL DTR CAPACITY IN KVA (Including Bulk)
				5 MVA	10 MVA	20 MVA			Initial meter in LU reading at 11 KV side PSS	Final meter reading in LU at 11 KV side PSS	Energy Consumption in LU (July '13)	10 KVA	15 KVA	25 KVA	63 KVA	100 KVA	150KVA	250 KVA	500 KVA	630 KVA	990 KVA	HT Load in KVA		
2	Chikkodi	110/33/11 KV MUSS, ANKALI	33/11 KV		2	2	60	1) Ankali ®(R/B)	348.50	350.62	2.12			14	18	7		3						2934
								2) Ankali Town	614.47	618.19	3.72		2	11	15	9		1						2400
								4) Kerurawadi (R)					1	9	19	6		2	0					2537
								7) Kadapur (R)	537.03	540.70	3.67		4	20	23	11		2						3609
								Kallol (R)	293.91	295.45	1.55		0	0	2	10		0	0					1126
								Yadur	161.58	165.24	3.66			8	14	22		3						4032
3	Chikkodi	33/11KV MUSS, Khothawadi	33/11 KV	**2**			10	1) Manewadi	33.21	35.36	2.15			8	19	13		2						3197
								2) Ingali (R)	40.56	43.14	2.58			15	20	14		1						3285
								3)) Krishna R/B	1.06	1.11	0.04			7	10	12		1						2255
								4) Manjari (R)			3.60			11	16	8		3						2833
								5) Chandur (R)			3.50		1	8	12	23		1						3521
								Yadur			2.49		1	12	3	4		0	0					904
								Ingli W/S			0.37		0	0	0	2		0	0					200
4	Chikkodi	110KV Nagaramunolli	33/11 KV		2		20	Bhogada	95.60	97.93	2.33			15	36	9		1						3793
								Nagaramunnolli 2	26.75	26.87	0.12			9	1									288
								Naramunolli	69.81	74.32	4.51		1	13	27	14								3441
								Kenchanatti	81.83	86.64	4.81			19	25	9								2950
								Hanchinal	27.48	29.53	2.04			14	9	7		1						1867
								Umarani	70.96	71.39	0.43			4	10	7								1430
								Belagali	5.04	5.57	0.53			19	13	19		2						3694
								Itnal	83.68	85.42	1.75			10	28	8								2814
5		33/11KV MUSS, KABBUR & Vijayanagar		2			10	1) Kanakikodi(R)	91.40	94.23	2.83			15	24	12								3087
								5) Kabbur (R)			1.60			9	9	8		1						1842
								LIS			1.60					1								100
								7) Meerapuratti	71.90	74.98	3.08			15	26	25		1						4763
								6) Jaganur			6.54			8	32	13		2						4016
6	Chikkodi	33KV Vijayanagar	33/11 KV	2			10	3) Vijayanagar			2.50			3	24	21		1						3937
								Vijayanagar RE TC			0.75				1									63
								4) Gurukul			3.05			1	22	7		1						2361
7	Chikkodi	33KV Kerur	33/11 KV	2			10	Kerurwadi	155.69	157.15	1.46			11	13	10								2094
								Jodakurli	112.74	115.04	2.30			13	32	9								3241
								Solar Plant	1.40	1.41	0.02				1									63
								Kerur	109.55	110.47	0.93			8	14	9		1						2232
								Basanalgaddi	149.61	153.31	3.69			16	22	15								3286
								Kadapur	139.84	140.76	0.92		1	9	11	9								1833
8	Chikkodi	33KV Karoshi	33/11 KV	2			10	Karoshi town	17.63	18.74	1.11			3	2	6								801
								Bmblawad	142.91	145.57	2.66		1	24	29	16								4042
								Kargoan	154.47	158.00	3.53			14	21	13								2973
								Mugali	75.82	78.07	2.24			17	22	16								3411
								Karoshi	124.53	125.99	1.46			7	15	9								2020
9	Chikkodi	33/11 KV MUSS, Khadaklat	33/11 KV	2			10	Dhulaganwadi			0.94		1	26	26	9		1						3453
								Sankanwadi	310.12	310.70	0.58			6	7	5								1091
								Navalihal & Kothali	254.53	257.41	2.88			10	11	8		1						1993

Sl. No.	Name of Division	Name of GSS	Voltage Level	Power Transformer in nos.			PTR Capacity in MVA	Name of Outgoing 11 kV feeder	A	B	C=B-A	DISTRIBUTION TRANSFORMER DETAIL IN NOS.											NO OF HT BULK	TOTAL DTR CAPACITY IN KVA (Including Bulk)
				5 MVA	10 MVA	20 MVA			Initial meter in LU reading at 11 KV side PSS	Final meter reading in LU at 11 KV side PSS	Energy Consumption in LU (July '13)	10 KVA	15 KVA	25 KVA	63 KVA	100 KVA	150KVA	250 KVA	500 KVA	630 KVA	990 KVA	HT Load in KVA		
10	Chikkodi	110 GLK	110/11 KV		2	1	40	Shirgoan	247.91	250.01	2.10			23	40	13		2						4895
11	Chikkodi	110/11 Muss Nipani	110/11 KV				0	Stavanidhi	148.26	149.60	1.34		0	3	5	5		0	0					890
								MGM			4.50		0	4	14	12		2	0					2682
								NH 4			4.40		0	9	15	17		1	0					3120
								Power house	391.64	400.78	9.14		0	8	26	25		6	1					6338
								Industrial	878.96	882.74	3.78		0	3	16	13		1	0					2633
								Pattankudi	707.12	710.16	3.04		5	32	38	19		0	0					5169
								Shendur	225.96	228.16	2.20		0	26	26	15		0	0					3788
								Kurli	767.94	771.08	3.14		1	29	45	22		1	0					6025
								Yamagarni	442.86	445.14	2.28		2	45	27	21		1	0					5206
								Akkol	698.54	703.36	4.82		0	35	33	24		1	0					5604
								VMKS	53.72	53.85	0.13			4	2	15								1726
12	Chikkodi	33/11 KV MUSS, Khadaklat	33/11 KV	2			10	Khadaklat	337.17	340.33	3.17		0	25	21	12		1	0					3398
								DSC Factory			0.04		0	0	1	0		1	0					313
								Manuchiwadi			1.91			18	11	22								3343
								Tapakarwadi			1.19		0	9	4	8		0	0					1277
13	Chikkodi	33/11 KV MUSS, Benadi	33/11 KV	1			5	Shivapurwadi	165.41	165.92	0.50		0	17	8	5		0	0					1429
								Benadi(Village)	36.49	37.35	0.85		0	8	4	5		0	0					952
								Benadi(IP)	66.51	67.09	0.57		0	16	17	23		0	0					3771
								Adi	227.58	230.83	3.25		3	11	26	15		1	0					3708
								Factory	1.51	1.55	0.04		0	0	1	0		0	0					63
								Hanchinal	53.94	54.77	0.84		1	15	9	6		0	0					1557
14	Chikkodi	33/11 KV MUSS, Koganolli	33/11 KV	2			10	Koganolli			2.93		2	16	12	17		0	0					2886
								Rivar Bed			3.69		2	17	26	19		0	0					3993
								Tol Naka			1.22		0	1	2	0		0	0					151
								Appachawadi			1.53		0	27	26	17		0	0					4013
								Soundalaga			4.19		0	18	13	23		0	0					3569
								Bhivashi			2.37		2	22	25	18		1	0					4205
15	Chikkodi	110/33/11 KVA MUSS Sadalga	33/11 KV		2	2	60	Sadalga	495.14	498.90	3.76		0	12	12	13		0						2356
								Wadagol	637.84	643.52	5.68		1	12	25	26		2						4990
								Mallikwad	771.00	776.12	5.12		0	5	23	23		5						5124
								Nagzari	408.38	409.38	1.00		1	4	3	2		0						504
								Nej	698.92	702.00	3.08		0	14	31	15		1						4053
								Bedakihal	1064.52	1066.72	2.20		1	18	21	27		4						5488
								Honde	769.48	773.18	3.70		0	18	33	22		0						4729
								Janawad	692.88	696.58	3.70		1	7	13	10		1						2259
								Venkateshwar	356.13	359.92	3.79		2	5	10	15		1						2535

Sl. No.	Name of Division	Name of GSS	Voltage Level	Power Transformer in nos.			PTR Capacity in MVA	Name of Outgoing 11 kV feeder	A	B	C=B-A	DISTRIBUTION TRANSFORMER DETAIL IN NOS.											NO OF HT BULK	TOTAL DTR CAPACITY IN KVA (Including Bulk)
				5 MVA	10 MVA	20 MVA			Initial meter in LU reading at 11 KV side PSS	Final meter reading in LU at 11 KV side PSS	Energy Consumption in LU (July '13)	10 KVA	15 KVA	25 KVA	63 KVA	100 KVA	150KVA	250 KVA	500 KVA	630 KVA	990 KVA	HT Load in KVA		
16	Chikkodi	110/33/11 KVA MUSS Borgaon	33/11 KV		2		20	Gumpa Express	115.82	123.34	7.52		0	10	9	11		1	2					3167
								Pachamail	37.96	43.17	5.22		0	5	12	5		0	0					1381
								Kasanal			6.65		0	12	27	8		1	0					3051
								Doodhaganga	101.35	104.05	2.70		2	11	17	18		1	0					3426
								Boragaon	67.66	70.82	3.16		2	11	9	6		1	0					1722
								Garment	5.69	5.78	0.10		0	0	1	1		0	0					163
								Wadageri	39.75	42.29	2.55		0	7	21	13		0	0					2798
								Manakapur	18.25	20.61	2.37		0	5	9	13		0	0					1992
								Dhonewadi	94.39	98.65	4.26		0	6	11	5		4	0					2343
								Boragaonwadi	84.60	88.50	3.90		0	13	19	12		1	0					2972
								Shiradwad(Janawad)	71.47	73.33	1.86		0	11	18	20		1	0					3659
17	Chikkodi	33/11 KVA MUSS Bhoj	33/11 KV	2			10	Bhojwadi			6.64		4	12	13	17		0						2879
								Bhoj			6.80		0	1	6	4		2						1303
								Barawad/ Bhoj r/b			6.96		1	6	24	23		0						3977
								Karadaga(R/B)			6.82		0	2	19	14		2						3147
								avanamath/Dhonewadi IP			6.80		0	7	24	12		1						3137
18	Chikkodi	110/11 KVA MUSS GALATAGA	110/11 KV		2	1	40	Galataga(T)	121.20	123.28	2.09		2	6	4	3		2						1232
								Mamadapur/Bhimapurwa	165.91	167.41	1.49		1	8	21	11		1						2888
								Sidanal	133.51	135.47	1.97		0	18	17	18		1						3571
								Hunnaragi	77.16	77.87	0.71		1	3	12	7		0						1546
								Dilaipurwadi	185.08	187.39	2.31		0	3	26	15		1						3463
								Nej	115.58	117.74	2.16		0	6	16	16		0						2758
								Chandrama	319.58	322.54	2.96		3	15	17	16		0						3091
								Beereshwar	252.11	254.52	2.41		0	11	26	20		0						3913
								Khadaklat W/S	65.88	67.01	1.13		0	7	16	1		2						1783
19	Chikkodi	33/11 KVA MUSS Nanadi	33/11 KV	2			10	Lift			1.36		0	1	5	5		0						840
								Karnataka Kodi			6.84		1	6	8	4		0						1069
								Examba (v)			6.54		0	13	11	9		3						2668
								Examba (R/B)			6.82		2	8	30	15		1						3870
								Nanadi			6.59		5	16	24	11		0						3087
								Arabyanwadi			6.66		4	14	21	12		0						2933
								Nagaral			6.80		0	31	23	12		0						3424
								Kallol			6.89		1	13	23	26		1						4639
20	Chikkodi	33/11 KVA MUSS Kunnur	33/11 KV	2			10	Gajabarawadi	146.57	147.14	0.57		2	13	21	10		1						2928
								Mangur	42.02	42.64	0.62		0	10	13	14		1						2719
								Kunnur r/b	15.74	15.88	0.14		0	1	9	6		0						1192
								Sainath	200.64	200.65	0.01		0	0	4	0		0						252
								Chouki maddi	38.40	39.35	0.95		0	16	20	13		1						3210
								Water Supply/Kunnur vil	457.58	459.19	1.61		0	4	3	2		1						739
Chikkodi Division Total [Sub-Total 1 to 20]				**23**	**14**	**8**	**415**		**20985.59**	**21202.83**	**365.41**		**71**	**1441**	**2199**	**1564**		**103**	**5**	**0**	**0**	**0**	**0**	360277

Sl. No.	Name of Division	Name of GSS	Voltage Level	Power Transformer in nos.			PTR Capacity in MVA	Name of Outgoing 11 kV feeder	A	B	C=B-A	DISTRIBUTION TRANSFORMER DETAIL IN NOS.											NO OF HT BULK	TOTAL DTR CAPACITY IN KVA (Including Bulk)
				5 MVA	10 MVA	20 MVA			Initial meter in LU reading at 11 KV side PSS	Final meter reading in LU at 11 KV side PSS	Energy Consumption in LU (July '13)	10 KVA	15 KVA	25 KVA	63 KVA	100 KVA	150KVA	250 KVA	500 KVA	630 KVA	990 KVA	HT Load in KVA		
1	Raibag	110/33/11kV Hidakal	33/11 KV		1	3	70	Itnal	1475.13	1484.67	9.54			9	26	4								2263
								Niralkodi-I	0.00	0.00				46	34	14								4692
								Alagawadi	1458.75	1460.88	2.13			48	23	22								4849
								Bastawad-II	1187.16	1193.91	6.75			45	43	15								5334
								Palabhavi I	1465.92	1471.23	5.31			21	40	19								4945
								Bastawad	930.36	934.84	4.48			42	11	24								4143
								Niralkodi-II	995.20	998.96	3.76			38	24	3								2762
								Hireyal II	1803.64	1819.48	15.84			42	61	19								6793
								Raibag Road	9.22	15.95	6.74			33	45	16								5260
								Hidakal	913.08	920.32	7.24			33	36	19								4993
								Kurabagodi	899.36	905.12	5.76			40	69	24								7747
								Mugalkod (R)	1091.04	1096.96	5.92			35	48	21								5999
								Savasuddi	543.05	550.98	7.93			81	48	12								6249
								Khanadal	418.87	422.29	3.42			73	34	8								4767
								Niralkodi-III	425.60	430.80	5.20			35	25	10								3450
								Harugeri	400.18	408.42	8.24			32	25	15								3875
								Niralkodi-IV	261.05	265.98	4.93			15	22	8								2561
								Hireyal I	197.89	202.98	5.09			44	42	21								5846
								Mugalkod (U)	177.29	181.06	3.78			26	11	5								1843
2	Raibag	33/11kV Yalparatti	33/11 KV	3			15	Nilaji(B.Kodi	111.22	111.40	0.18			24	33	18								4479
								Alakanur(A)			3.20			22	15	4								1895
								Badabyakud	969.51	973.74	4.23			8	20	3								1760
								Alakanur(B)			2.86			33	41	10								4408
								Suttatti 2(Nilaji vg)			1.89			24	17	6								2271
3	Raibag	110/11kV Yalparatti	110/11 KV		2		20	Suttatti	0.99	1.04	0.05			22	10	18								2980
								Alakanur©(Vg)	1.39	1.52	0.13			19	13	16								2894
4	Raibag	33/11Kv Mantur	33/11 KV	2			10	Kankanwadi IP			2.64			18	27	11								3251
								Kankanwadi Vg-1			3.97			25	21	13								3248
								Kankanwadi Vg-2			2.53			17	16	8								2233
								Devapurahatti			7.10			40	26	8								3438
5	Raibag	33/11kV Koligudda	33/11 KV	2			10	Koligudda-1	211.36	212.97	1.61			18	21	7								2473
								Harugeri X	437.17	440.88	3.71			37	41	21								5608
								Koligudda-2	374.98	376.54	1.56			11	16	11								2383
								Yabaratti	161.96	164.26	2.30			38	23	10								3399
								KLD NJY			1.01			4	2	1								326
								Sankratti			0.97			3	1	3								438
6	Raibag	33/11kV Sultanpur	33/11 KV	2			10	Palabhavi			8.12			38	45	12								4985
								Kappalaguddi			7.25			18	16	18								3258
								Handigund Vg			6.48			30	26	11								3488
								Handigund IP			7.02			46	29	9								3877
								Sultanpur			8.50			53	35	16								5130
								Palabhavi Vg			7.60			30	28	16								4114
7	Raibag	33/11kV Alagawadi	33/11 KV	2			10	Bastawad	14.35	16.39	2.04			32	21	14								3523

Sl. No.	Name of Division	Name of GSS	Voltage Level	Power Transformer in nos.			PTR Capacity in MVA	Name of Outgoing 11 kV feeder	A	B	C=B-A	DISTRIBUTION TRANSFORMER DETAIL IN NOS.											NO OF HT BULK	TOTAL DTR CAPACITY IN KVA (Including Bulk)
				5 MVA	10 MVA	20 MVA			Initial meter in LU reading at 11 KV side PSS	Final meter reading in LU at 11 KV side PSS	Energy Consumption in LU (July '13)	10 KVA	15 KVA	25 KVA	63 KVA	100 KVA	150KVA	250 KVA	500 KVA	630 KVA	990 KVA	HT Load in KVA		
8	Raibag	110/11kV Saidapur	110/11 KV		2		20	Kappalaguddi	89.90	92.05	2.15			9	14	13								2407
								Handigund	813.16	815.72	2.56			41	35	18								5030
9	Raibag	110kV Itnal	110/11 KV		2		20	Itnal	32.29	38.73	6.44			48	44	21								6072
								Swami khodi	25.25	30.52	5.26			52	59	9								5917
								Laxmigudi	3.29	5.94	2.64			17	42	42								7271
								Jakwell	23.86	27.35	3.48			9	26	4								2263
10	Raibag	110kV Raibag	220/110/11 KV				0	Nidagundi	846.34	852.49	6.16			47	47	14								5536
								Mekhali	308.49	309.51	1.01			52	34	20								5442
								Nipanal	369.43	370.69	1.26			42	21	12								3573
								Bhiradi-1			9.78			46	15	16								3695
								Raibag Gr	1677.49	1684.03	6.54			43	39	18								5332
								Bommanal	1306.38	1311.27	4.89			79	59	20								7692
								Hanabaratti	1274.76	1276.77	2.01			37	20	6								2785
								Yadrav	798.93	800.76	1.83			30	15	11								2795
								Canal	542.53	545.30	2.77			34	36	17								4818
								Bhiradi-2	33.60	36.82	3.22			48	33	11								4379
								Railway Stn			7.50			21	13	11								2444
								Kanchakarwadi	324.29	326.39	2.10			22	15	11								2595
								Diggewadi			5.32			53	22	19								4611
								Hullalakeri	246.53	248.47	1.94			26	20	8								2710
								Water Supply	296.51	298.14	1.63			2	3	6								839
								Shahupark-2	202.34	202.58	0.24			89	46	12								6323
								Jalalapur	260.44	266.01	5.57			61	46	13								5723
								Raibag Town	3.09	4.85	1.76			9	14	16								2707
11	Raibag	Chinahalli	33/11 KV					Miorab			3.33			13	9	1								992
								Chinchali RB			3.04			15	20	12								2835
								Chinchali Vg	204.04	208.00	3.96			8	2	3								626
								Upparkodi	12.95	13.16	0.21			16	17	10								2471
								Ganikodi			4.97			18	10	10								2080
								Badamikodi			2.89			10	10	8								1680
								Bekkeri			8.73			57	34	14								4967
								New Line			6.12			22	28	13								3614
12	Raibag	33Kv Yalparatti	33/11 KV				0	Shiragur			4.80			18	39	22								5107
								Chikkud			2.65			21	17	7								2296
								P'wadi			3.56			1	7	7								1166
								Yalparatti			7.22			24	34	20								4742
13	Raibag	Mantur	33/11 KV				0	Jodatti	51.73	53.22	1.48			30	22	10								3136
								Bendwad	181.86	182.87	1.01			18	25	13								3325
								Mantur			4.00			17	13	9								2144
								Nipanal	329.45	332.10	2.65			18	24	16								3562

Sl. No.	Name of Division	Name of GSS	Voltage Level	Power Transformer in nos.			PTR Capacity in MVA	Name of Outgoing 11 kV feeder	A	B	C=B-A	DISTRIBUTION TRANSFORMER DETAIL IN NOS.											NO OF HT BULK	TOTAL DTR CAPACITY IN KVA (Including Bulk)
				5 MVA	10 MVA	20 MVA			Initial meter in LU reading at 11 KV side PSS	Final meter reading in LU at 11 KV side PSS	Energy Consumption in LU (July '13)	10 KVA	15 KVA	25 KVA	63 KVA	100 KVA	150KVA	250 KVA	500 KVA	630 KVA	990 KVA	HT Load in KVA		
14	Raibag	33Kv Alagawadi	33/11 KV	2			10	Nidagundi	25.69	30.12	4.43			3	9	2								842
								Raibag Road	2.40	2.99	0.59			7	12	4								1331
								Bhirappa Maddi	65.89	69.06	3.17			42	26	4								3088
								Hunashikodi	53.08	55.98	2.90			48	26	5								3338
								Alagawadi	67.03	70.93	3.89			35	32	5								3391
								Murarji School			0.37					1								100
15	Raibag	33kV Nandikurli	33/11 KV	2			10	Nandikurali	11.91	13.44	1.53			27	26	24								4713
								Kempatti	1.30	1.55	0.25			30	31	11								3803
								Hullyalkeri			1.76			30	20	10								3010
16	Raibag	110kV Ankali	110/11 KV		2	2	60	Nasalapur	614.47	618.19	3.72			25	44	17								5097
								Savadatti Vg	668.43	674.50	6.07			41	47	23								6286
								Savadatti RB	601.16	609.85	8.69			26	34	21								4892
17	Raibag	Kudachi	220/110/11 KV					Shirgur			7.33			32	44	40								7572
								P'wadi			6.83			40	20	22								4460
								Morab			6.25			44	62	25								7506
								Shidlabhavi			7.85			45	35	43								7630
								Kudachi Town			2.87			9	14	16								2707
								Gundawad			4.86			27	22	25								4561
								Dharan			2.96			30	18	28								4684
								Kudachi WS			0.33				2									126
18	Raibag	33kV Kabbur	33/11 KV	2			10	Meerapuratti	8.92	12.62	3.70			6	8	4								1054
Raibag Division Total [Sub-Total 1 to 18]				**17**	**9**	**5**	**275**				**428.02**			**3118**	**2771**	**1396**		**0**	**0**	**0**	**0**	**0**	**0**	**392123**
Chikkodi Circle 11 kV side Input Energy											**1116.48**													
Chikkodi circle 11 KV side input Energy (Import from other circle or Utility)											**47.8**													
Chikkodi Circle 11 kV side Input Energy (Export to other Circle or Utility)											**0**													
Chikkodi Circle 11 kV side net Input Energy											**1164.28**													

11 kV LINE LOSS ASSESSMENT
OF
BANGLORE SOUTH CIRCLE
IN
KARNATAKA STATE

STUDY ON COMPONENT-WISE AT&C LOSSES ASSESSMENT FOR THE STATE OF KARNATAKA

B) 11 kV LINE LOSS ASSESSMENT (including DTR Loss) DETAIL OF BANGALORE SOUTH CIRCLE

Sl. No.	Name of Division	Name of PSS	Voltage Level	PTR Capacity in MVA	Name of Outgoing 11 kV Feeder	A	B	C=B-A	Distribution Transformer Capacity in kVA/ Bulk	Distribution Transformer Location/ Code	D	E	F=E-D	G=C-∑F	% of 11 kV Loss w.r.t. Input Energy
						Initial Meter Reading at 11 kV side of PSS (LU)	Final Meter Reading at 11 kV side of PSS (LU)	Energy Consumption at 11 kV Outgoing Meter at Source End during Interval in LU			Initial meter reading at LT side of DTR (LU)	Final meter reading at LT side of DTR (LU)	Energy consumption at destination end during interval in LU.	11 kV Line Loss in LU	
1	Jayanagar	Arehalli	66/11KV	2X20	11 KV F-08 Kormarla	175.178	181.381	6.203	100	TC_34/SISTER SUPERIOR	17.382	17.437	0.055	0.276	4.454
									100	TC_371/RAJASHEKARAN NEAR KALA	2.730	2.786	0.056		
									100	TC_361/S.MANJUNATH HANUMAGIRI	4.243	4.297	0.054		
									500	TC_36/MALLIKARJUNA HOUSE	131.271	131.772	0.501		
									100	TC_442/GOVINDE GOWDA, OPP	0.688	0.747	0.059		
									100	TC_427/KALPATHARU DEVELOPERS	3.673	3.730	0.057		
									100	TC_449/MOHAN BABU, C.K.SANDRA	3.179	3.234	0.055		
									100	TC_378/LAKSHMIDEVI C.K.SANDRA	3.145	3.201	0.056		
									250	TC_409/GADDE TC, C.K.SANDRA	20.691	20.879	0.188		
									250	TC_158/VARADARAJU OPP KALA	24.408	24.572	0.164		
									250	TC_364/C.K.SANDRA OPP. BUS	11.870	12.042	0.172		
									500	TC_29/KOMAGLA	117.512	117.998	0.486		
									250	TC_38/VENKATESH PRASAD	52.437	52.670	0.233		
									250	TC_199/K N GURUSWAMY	35.071	35.246	0.175		
									250	TC_375/SRIDHAR MUNIREDDY	11.533	11.718	0.186		
									100	TC_390/N.S.ANAND, MUNIREDDY	7.940	7.996	0.056		
									100	TC_329/KIDNEY FOUNDATION	4.144	4.203	0.059		
									100	TC_278/VENKATARAMANAPPA	6.237	6.292	0.056		
									250	TC_408/OM SHAKTHI TEMPLE	10.316	10.477	0.161		
									63	TC_358/JYOTHISHWAR REDDY	19.416	19.455	0.039		
									250	TC_256/AJANTHA ENCLAVE	27.654	27.863	0.209		
									250	TC_35/GADDE	0.418	0.588	0.170		
									250	TC_338/M.C.VARADARAJU	105.048	105.243	0.194		
									100	TC_284/L KRISHNAM NAIDU	2.049	2.101	0.052		
									250	TC_603/N/A	480.099	480.216	0.117		
									100	TC_445/NARAYANA REDDY	11.104	11.134	0.029		
									250	TC_589/N/A	52.672	52.756	0.083		
									250	TC_597/N/A	48.066	48.134	0.068		
									63	TC_545/N.G.SHESHAPPA NAIDU	0.114	0.138	0.023		
									63	TC_474/B.S.ANJUKUMAR	5.911	5.941	0.030		
									250	TC_322/N. BALAKRISHNA NAIDU	3.651	3.733	0.082		
										HT 18			0.700		
										HT 19			0.700		
										HT 56			0.600		
Sub-Total (1)						**175.178**	**181.381**	**6.203**					**5.927**	**0.276**	**4.454**

Sl. No.	Name of Division	Name of PSS	Voltage Level	PTR Capacity in MVA	Name of Outgoing 11 kV Feeder	A	B	C=B-A	Distribution Transformer Capacity in kVA/ Bulk	Distribution Transformer Location/ Code	D	E	F=E-D	G=C-∑F	% of 11 kV Loss w.r.t. Input Energy
						Initial Meter Reading at 11 kV side of PSS (LU)	Final Meter Reading at 11 kV side of PSS (LU)	Energy Consumption at 11 kV Outgoing Meter at Source End during Interval in LU			Initial meter reading at LT side of DTR (LU)	Final meter reading at LT side of DTR (LU)	Energy consumption at destination end during interval in LU.	11 kV Line Loss in LU	
2	Jayanagar	ISRO Layout	66/11KV	2X20	11KV F3	417.720	427.507	9.787	250	TC_442/KK INDUSTRIES	0.884	1.138	0.254	0.338	3.457
									250	TC_223/GANA RESIDENCY	28.974	30.388	1.413		
									250	TC_445/T N MURTHY APPT	5.159	5.363	0.204		
									100	TC_298/N CHANDRASHEKHAR REDDY (GANNA APPT)	6.003	6.089	0.086		
									100	TC_297/N PAAMAVATHY (GANNA APPT)	4.870	4.934	0.063		
									100	TC_272/GANA APPT BLOCK 1	9.845	9.899	0.054		
									100	TC_273/V L BALAKRISHNA APPT GANA APPT BLOCK 4	8.940	8.975	0.035		
									250	TC_218/N BHASHKAR REDDY GANNA RESIDENCY	36.806	36.917	0.111		
									250	TC_217/GANNA RESIDENCY Y Halli	66.822	66.926	0.104		
									250	TC_113/SETHURAM AND SONS	52.351	52.481	0.130		
									250	TC_112/RAMAKRISHNA NAGAR	33.594	35.966	2.372		
									500	TC_111/SRI DEVI DIARY	0.510	0.756	0.246		
									250	TC_187/ANNAPOORINESWARI	3.460	0.959	-2.502		
									250	TC_413/P & OTHERETEMPLE TREE APARTMENT	45.147	46.098	0.952		
									250	TC_412/PRAMOD JARAGANAHALLI (TEMPLE TREE APARTMENT)	3.913	4.013	0.100		
									250	TC_206/GOPALAN APPT	22.813	23.029	0.216		
									500	TC_205/GOPALAN APPT	33.867	34.167	0.299		
									250	TC_289/TEMPLE TREE APARTMENT	0.000	0.000	0.000		
									250	TC_290/TEMPLE TREE APARTMENT	11.547	11.772	0.225		
									250	TC_48/K.K.POLYMERS, Y.HALLY	0.242	0.342	0.100		
									500	TC_45/GANGALAMPS. Y.HALLY	52.973	53.130	0.157		
									250	TC_47/K.K.COLOUR, Y.HALLY	36.257	36.413	0.157		
									250	TC_44/GOVT.HOSPITAL, Y.HALLY	0.800	0.989	0.189		
									250	TC_43/BASAPPAREDDY COMPOUND	1.082	1.239	0.158		
									500	TC_42/ANNAIYA ROAD Y HALLI	87.777	87.939	0.162		
									250	TC_214/POST OFFICE ROAD, Y.HALLY	0.790	0.958	0.169		
									100	TC_245/RAJSHEKHAR	4.441	4.482	0.041		
									100	TC_408/LAVANYA AND OTHERS	3.739	3.804	0.065		
									500	TC_41/PANCHAYAT OFFICE,Y.HALLY	13.696	13.826	0.130		
									250	TC_39/JETTAPPA BUILDING,Y.HALLY	21.353	21.628	0.274		
									100	TC_268/NEAR SHANTI INDUSTRIES	12.996	13.047	0.051		
									100	TC_49/SHANTHI ENGG.INDUSTRIES	12.702	13.487	0.785		
									100	TC_358/G MURLY KRISHNA RAJU APPT	4.281	4.371	0.090		
									100	TC_233/YELAHCANAHALLI SHANTHI	27.919	28.271	0.352		
									100	TC_375/OXYGEN Y HALLI APPT	2.847	2.906	0.059		
									100	TC_485/B LAXMI NARAYANA REDDY Y HALLI ANNAYA ROAD	1.120	1.207	0.088		
									100	TC_40/GOUTHAM PLASTIC	0.009	0.009	0.000		
									100	TC_46/LAXMIDEVAMMA Y HALLI	10.259	10.324	0.065		
									100	TC_409/VALLAVA REDDY	0.456	0.504	0.048		
									250	TC-346/K PRAVIN Y HALLI APPT	10.290	10.537	0.247		

Sl. No.	Name of Division	Name of PSS	Voltage Level	PTR Capacity in MVA	Name of Outgoing 11 kV Feeder	A Initial Meter Reading at 11 kV side of PSS (LU)	B Final Meter Reading at 11 kV side of PSS (LU)	C=B-A Energy Consumption at 11 kV Outgoing Meter at Source End during Interval in LU	Distribution Transformer Capacity in kVA/ Bulk	Distribution Transformer Location/ Code	D Initial meter reading at LT side of DTR (LU)	E Final meter reading at LT side of DTR (LU)	F=E-D Energy consumption at destination end during interval in LU.	G=C-∑F 11 kV Line Loss in LU	% of 11 kV Loss w.r.t. Input Energy
										HT 112			0.500		
										HT 95			0.600		
										HT 44			0.300		
										HT 49			0.300		
Sub-Total (2)						**417.720**	**427.507**	**9.787**					**9.449**	**0.338**	**3.457**
3	**Jayanagar**	**Sarraki**	66/11 KV	5X20	**11 KV F6 Feeder**	142.114	151.391	9.277	250	TC_98/RAJENDHARA NAIDU/250	1.094	1.202	0.107	0.434	4.677
									250	TC_174/SHANTHA BAI/250	0.647	0.733	0.086		
									250	TC_164/RAJKUMAR KUKREJA,11TH MAIN/250	8.615	9.056	0.441		
									250	TC_01/HAL TC/250	21.010	21.094	0.084		
									250	TC_09/N/A/250	1.706	2.132	0.426		
									250	TC_129/VYSYA BANK TC/250	0.420	0.504	0.084		
									250	TC_103/POST OFFICE/250	9.867	10.123	0.257		
									250	TC_166/BHASKAR NAIDU TC/250	1.333	1.490	0.157		
									250	TC_120/CHANRA PLAZA/250	11.687	11.842	0.155		
									100	TC_177/K.G.KASHAVA MURTHY/100	4.774	4.897	0.123		
									250	TC_157/VISHAL M.VADHWA/250	57.425	58.312	0.888		
									250	TC_57/CLUB TC NO 2/250	14.067	14.194	0.127		
									250	TC_130/PANDURANGA SAIT TC/250	7.894	8.057	0.163		
									250	TC_163/VISHAL VADHAVA. JAIN/250	0.242	0.327	0.085		
									250	TC_95/GEETA COLONY TC/250	1.269	1.447	0.178		
									250	TC_101/SHARADA COMPLEX 18TH CROSS/250	28.700	28.927	0.227		
									250	TC_137/RAJAAPA MANI MOTORS,4TH BLK/250	1.036	1.355	0.319		
									250	TC_51/BESCOM OFFICE TC/250	34.605	34.712	0.107		
									250	TC_145/UPAHARA DARSHINI TC III BLK/250	37.743	38.340	0.597		
									990	TC_08/WATER SUPPLY TC/990	38.261	38.517	0.257		
									100	TC_191/PUSHPA K REDDY/100	0.000	0.000	0.000		
									250	TC_15/SYNDICATE BANK TC/250	10.462	11.199	0.736		
									100	TC_158/KP.KIRANKUMAR, 9TH MAIN SP/100	1.462	1.485	0.023		
									250	TC_194/SANTHOSH/250	0.790	1.066	0.276		
									250	TC_200/P.S BALAJRISHNA SHETTY/250	3.457	3.546	0.088		
										HT 24			0.690		
										HT 93			0.580		
										HT 174			0.680		
										HT 56			0.600		
										HT 19			0.300		
Sub-Total (3)						**142.114**	**151.391**	**9.277**					**8.843**	**0.434**	**4.677**

Sl. No.	Name of Division	Name of PSS	Voltage Level	PTR Capacity in MVA	Name of Outgoing 11 kV Feeder	A	B	C=B-A	Distribution Transformer Capacity in kVA/ Bulk	Distribution Transformer Location/ Code	D	E	F=E-D	G=C-∑F	% of 11 kV Loss w.r.t. Input Energy
						Initial Meter Reading at 11 kV side of PSS (LU)	Final Meter Reading at 11 kV side of PSS (LU)	Energy Consumption at 11 kV Outgoing Meter at Source End during Interval in LU			Initial meter reading at LT side of DTR (LU)	Final meter reading at LT side of DTR (LU)	Energy consumption at destination end during interval in LU.	11 kV Line Loss in LU	
4	Jayanagar	Nimhans	66/11KV	2X20	11 KV F4 H.Thappa	1320.560	1338.296	17.736	100	TC_80/GULBARGA COLONY /100	9.344	9.428	0.084	1.751	
									250	TC_85/SUBHAN KHAN TC/250	49.162	50.579	1.417		
									250	TC_86/RBI COLONY /250	4.349	4.733	0.384		
									100	TC_159/BHAWAKAR TC/100	19.630	19.681	0.051		
									250	TC_138/TANVEER TC/250	15.566	16.059	0.493		
									250	TC_103/NIMHASS QTRS NO5/250	15.979	16.087	0.108		
									250	TC_98/BYRSANDRA TC 8TH MAIN/250	43.459	43.619	0.160		
									250	TC_88/SBM NIMHAS TC/250	5.271	5.317	0.047		
									250	TC_94/NIMHASS TC NO3/250	8.816	9.584	0.768		
									100	TC_79/RUBBI APP/100	8.072	8.142	0.069		
									500	TC_83/NIMHASS QTRS NO2/500	9.030	9.297	0.267		
									500	TC_82/NIMHASS QTRS TC 01/500	12.802	13.206	0.404		
									250	TC_95/NIMHASS QTRS 04/250	0.692	0.808	0.115		
									250	TC_68/HANUMANTTHAPPA_3/250	73.838	74.546	0.708		
									250	TC_121/6TH MAIN BYRASANDARA/250	2.672	3.056	0.385		
									500	TC_6/8TH MAIN BYRASANDRA/500	77.409	77.696	0.287		
									100	TC_150/COMFORT APP-2_1/100	9.334	9.434	0.099		
									100	TC_124/COMFORT APP-2_2/100	0.273	0.325	0.052		
									100	TC_139/SILPA RESIDENCY/100	1.566	1.578	0.012		
									250	TC_55/GOKULA APP/250	36.451	36.578	0.127		
									250	TC_62/GOKUL APPARTEMENT T C2/250	37.695	38.175	0.480		
									250	TC_128/uti bank tc/250	8.868	8.952	0.084		
									250	TC_45/yash yashavi appartment/250	7.092	7.485	0.393		
									250	TC_94/BSR GREEN PARK/250	18.698	18.831	0.133		
									250	TC_161/J.NAGAR COMFORT/250	12.135	12.576	0.441		
									250	TC_97/5TH CROSS LIC COLONY/250	33.091	33.305	0.213		
									250	TC_05/LIC COLONY_1/250	17.138	19.745	2.607		
									250	TC_113/LIC COLONY TC 3/250	25.625	25.791	0.166		
									250	TC_48/LIC COLONY_2/250	19.872	20.029	0.157		
									250	TC_36/CANARA HOLIDAY HOME/250	22.002	22.233	0.231		
									100	TC_195/PRADHAN APP/100	0.069	0.174	0.104		
										HT 436			2.327		
										HT 489			2.610		
Sub-Total (4)						**1320.560**	**1338.296**	**17.736**					**15.985**	**1.751**	**9.873**

Sl. No.	Name of Division	Name of PSS	Voltage Level	PTR Capacity in MVA	Name of Outgoing 11 kV Feeder	A	B	C=B-A	Distribution Transformer Capacity in kVA/ Bulk	Distribution Transformer Location/ Code	D	E	F=E-D	G=C-∑F	% of 11 kV Loss w.r.t. Input Energy
						Initial Meter Reading at 11 kV side of PSS (LU)	Final Meter Reading at 11 kV side of PSS (LU)	Energy Consumption at 11 kV Outgoing Meter at Source End during Interval in LU			Initial meter reading at LT side of DTR (LU)	Final meter reading at LT side of DTR (LU)	Energy consumption at destination end during interval in LU.	11 kV Line Loss in LU	
5	Jayanagar	P B Nagara	66/11KV	2X20	11 KV Jayanagar	1079.790	1090.843	11.053	250	TC-33/10TH X,7TH BLOCK WEST/250	19.688	19.808	0.120	0.394	
									250	TC-34/9TH X,7TH BLOCK WEST/250	1.930	2.072	0.142		
									250	TC-94/BRIGADE MMRMU TC/250	28.393	28.588	0.196		
									63	TC-201/HOUSE #60 22ND CROSS 6TH BLOCK JAYANAGAR/63	13.860	13.960	0.100		
									250	TC-136/OPP. URS PARTY HALL/250	11.720	11.840	0.120		
									63	TC-163/K.M NARAYANA MURTHY/63	13.863	13.956	0.093		
									250	TC-40/MMI KR ROAD/250	24.448	24.574	0.126		
									100	TC-59/PAPPU COT OMSRI/100	1.087	1.146	0.059		
									250	TC-162/MUKESH KUMAR JAIN TC/250	21.105	21.248	0.143		
									250	TC-43/MM BRIGADE C&D BLOCK TC/250	11.720	11.840	0.120		
									250	TC-70/11TH CROSS,KR ROAD,7TH BLOCK/250	2.334	2.427	0.092		
									100	TC-118/SAKSHI APT/100	12.940	12.970	0.030		
									100	TC-144/SV RESIDENCE-1/100	6.374	6.430	0.056		
									250	TC-22/SAKAMMA GARDEN TC,6TH BLOCK/250	2.971	3.087	0.116		
									250	TC-49/AISSWARYA APT/250	1.656	1.753	0.097		
									250	TC-102/ PARK TC BESIDE KRI LAKE/250	0.573	0.752	0.179		
									250	TC-24/YEDIYUR TANK NEAR PARK/250	3.181	3.298	0.117		
									500	TC-100/PALLAVA TERRACE TC/500	18.309	18.448	0.139		
									250	TC-96/AMAR JYOTI-1/250	18.386	18.478	0.093		
									250	TC-97/AMAR JYOTI-2/250	19.187	19.286	0.099		
									250	TC-69/22ND CROSS,6TH BLOCK MILK BOOT/250	11.720	11.840	0.120		
									100	TC-214/PRDSIDANT N.S.V.K SCHOOL/100	15.213	15.270	0.057		
									250	TC-35/A K COLONY TC/250	36.974	37.268	0.295		
									250	TC-41/MM REVATHI/250	9.936	10.014	0.078		
									250	TC-36/SUDARANI/250	11.720	11.840	0.120		
									250	TC-63/GAYATRI/250	28.854	28.977	0.123		
									100	TC-119/SAROJA TC/100	7.878	7.921	0.043		
									250	TC-32/N/A/250	1.297	1.438	0.141		
									250	TC-33/10TH X,7TH BLOCK WEST/250	1.394	1.512	0.118		
									250	TC-93/S.K. GARDEN/250	1.477	1.580	0.104		
									250	TC-133/BABU REDDY TC/250	17.904	17.992	0.088		
									500	TC-120/JAIN APARTMENT-3/500	4.464	4.814	0.350		
									500	TC-39/P O RD YEDIYURGATE/500	25.290	25.460	0.170		
									500	TC-116/JAIN APARTMENT-2/500	17.966	18.190	0.223		
									500	TC-115/JAIN APARTMENT-1/500	19.282	19.534	0.252		
									500	TC-120/JAIN APARTMENT-3/500	82.431	82.573	0.142		
									100	TC-128/SAI MANJUNATH APT/100	5.456	5.491	0.035		
									250	TC-181/KR ROAD 7TH CROSS 7TH BLOCK/250	1.307	1.403	0.097		
									100	TC-117/VELLASOM COLLEGE/100	12.940	13.250	0.310		
									250	TC-45/MM COMPLEX/250	11.720	11.840	0.120		

Sl. No.	Name of Division	Name of PSS	Voltage Level	PTR Capacity in MVA	Name of Outgoing 11 kV Feeder	A	B	C=B-A	Distribution Transformer Capacity in kVA/ Bulk	Distribution Transformer Location/ Code	D	E	F=E-D	G=C-∑F	% of 11 kV Loss w.r.t. Input Energy
						Initial Meter Reading at 11 kV side of PSS (LU)	Final Meter Reading at 11 kV side of PSS (LU)	Energy Consumption at 11 kV Outgoing Meter at Source End during Interval in LU			Initial meter reading at LT side of DTR (LU)	Final meter reading at LT side of DTR (LU)	Energy consumption at destination end during interval in LU.	11 kV Line Loss in LU	
									250	TC-41/MM REVATHI/250	9.936	10.014	0.078		
									250	TC-42/04MM BRIGADE COMMERCIAL COMPLEX/250	3.178	3.252	0.074		
									500	TC-44/MM INDUSTRIAL ESTATE CPLX TC/500	9.300	9.437	0.137		
									250	TC-71/BUS STOP/250	3.371	3.441	0.070		
									250	TC-25/ALADAMARA TC,KP RD,7TH BLOCK/250	1.439	1.495	0.056		
									100	TC-152/PEPPER SQUARE/100	5.456	5.491	0.035		
									250	TC-63/GAYATRI/250	11.724	11.840	0.116		
									100	TC-46/RANINI/100	12.940	13.250	0.310		
									250	TC-133/BABU REDDY TC/250	17.948	18.020	0.072		
									250	TC-27/DASAPPA TC/250	25.959	26.176	0.217		
									100	TC-180/SARASWATHA BANK/100	49.139	50.976	1.837		
									990	TC-60/REACH FERTILTY CLINIC TC/990	24.570	25.488	0.919		
									100	TC-172/RANGA KRUPA/100	0.051	0.090	0.039		
									250	TC-21/SAROVARA APPT 6TH BLOCK/250	11.724	11.840	0.116		
										HT 01			0.280		
										HT 86			0.390		
										HT 33			0.690		
Sub-Total (5)						**1079.790**	**1090.843**	**11.053**					**10.659**	**0.394**	**3.565**
6	**Jayanagar**	**RBI**	66/11KV	2X20	**11 KV F-3**	**381.228**	**394.234**	**13.006**	250	TC-114/SARVABHOMA NAGAR OLD	5.524	5.642	0.118	0.549	
									250	TC-590/P. HARIHARAN	3.250	3.325	0.074		
									500	TC-311/MANTRI PARADISE	36.531	41.566	5.035		
									500	TC-312/MANTRI PARADISE	0.000	0.000	0.000		
									500	TC-313/MANTRI PARADISE	0.000	0.000	0.000		
									500	TC-308/MANTRI PARADISE	47.574	48.972	1.399		
									500	TC-309/MANTRI PARADISE	0.000	0.000	0.000		
									500	TC-310/MANTRI PARADISE	0.000	0.000	0.000		
									250	TC-274/SARVABAUMANAGARA	25.165	25.340	0.175		
									250	TC-825/HM SWAMY GPA SANJAY	6.127	6.292	0.164		
									100	TC-571/USHA SINGH	2.669	2.693	0.024		
									250	TC-644/M. SARVOTHAM	52.075	52.152	0.077		
									100	TC-931/YAMUNA APPT.	11.452	11.484	0.032		
									100	TC-94/SHOBHA K SHETTY MSB	3.884	3.930	0.045		
									100	TC-888/MAHAMMED ARIFFPASH MSB	4.257	4.289	0.032		
									250	TC-595/SARVABAUMANAGAR ABB	27.723	27.901	0.178		
									250	TC-653/SRINIVASA RAO & OTHERS	1.234	1.397	0.162		
									100	TC-572/N. MANJUNATH REDDY MSB	10.129	10.343	0.214		
									100	TC-732/SRI BALAJI BUILDERS	0.509	0.509	0.000		
									250	TC-543/SREYAS DEVELOPERS	8.668	8.760	0.092		
									250	TC-585/G. SRINIVASA BILEKHALLI	13.520	13.675	0.155		
									100	TC-923/P.I. HARIHARAN MSB	2.926	2.980	0.054		

Sl. No.	Name of Division	Name of PSS	Voltage Level	PTR Capacity in MVA	Name of Outgoing 11 kV Feeder	A	B	C=B-A			D	E	F=E-D	G=C-∑F	
						Initial Meter Reading at 11 kV side of PSS (LU)	Final Meter Reading at 11 kV side of PSS (LU)	Energy Consumption at 11 kV Outgoing Meter at Source End during Interval in LU	Distribution Transformer Capacity in kVA/ Bulk	Distribution Transformer Location/ Code	Initial meter reading at LT side of DTR (LU)	Final meter reading at LT side of DTR (LU)	Energy consumption at destination end during interval in LU.	11 kV Line Loss in LU	% of 11 kV Loss w.r.t. Input Energy
									100	TC-124/P.I. HARIHARAN	0.043	0.083	0.040		
									250	TC-129/SUMUKHA	0.659	0.840	0.182		
									63	TC-119/K. RAJU MSB/63 KVA	0.230	0.269	0.040		
									63	TC-887/RAJANIRAO MSB/63 KVA	3.363	3.410	0.047		
									63	TC-32/A.M LAKSHMI NARAYAN/63 KVA	2.631	2.683	0.052		
									63	TC-624/N. GOPAL REDDY/ 63 KVA	2.963	3.004	0.041		
									100	TC-959/T.SURESHKUMARREDDY MSB/100 KVA	0.127	0.128	0.001		
									100	TC-607/P.K. SHESHDRI/100 KVA	0.203	0.296	0.094		
									100	TC-51/R MANJULA MSB/100 KVA	0.979	1.014	0.035		
									250	TC-259/GOVINDAREDDY BUILDING/250 KVA	2.654	4.158	1.504		
									250	TC-458/SUNIL HINDURAJ/250 KVA	0.581	0.974	0.393		
									100	TC-681/VASANTHA REDDY/100 KVA	1.397	1.463	0.066		
									100	TC-118/MAUNIRAJ/100 KVA	2.102	2.478	0.376		
									100	TC-673/GIRIJA RAJ ARAKERE/100 KVA	3.183	3.202	0.019		
									250	TC-117/ARAKERE MAMTHA/250 KVA	1.155	1.341	0.186		
									100	TC-113/IIM COMPOUND/100 KVA	0.468	0.510	0.043		
										BGRHT 125			0.780		
										BGRHT 129			0.290		
										BGRHT 130			0.240		
Sub-Total (6)						**381.228**	**394.234**	**13.006**					**12.456**	**0.549**	**4.223**
7	**Jayanagar**	**BMTC**	66/11KV	2X20	**11 KV F2 SUBBAIAH**	**1403.840**	**1423.395**	**19.555**	500	TC_517/RAGHURAM SRINIVASA COLONY	2.020	2.532	0.512	0.729	
									250	TC_424/SRINIVASA COLONY IDBI	31.819	31.957	0.138		
									250	TC_234/4TH MAIN 16TH CROSS	1.885	2.000	0.114		
									250	TC_236/4TH MAIN 16TH CROSS	36.367	36.492	0.125		
									100	TC_N/A/BSUP	0.037	0.067	0.030		
									250	TC_262/CORPORATION QTRS ADD T	34.854	34.988	0.134		
									250	TC_244/MISSION ROAD	5.407	5.534	0.127		
									250	TC_298/CHANCHAL NAGPAL JCRD	78.433	78.536	0.103		
									100	TC_284/A. Munireddy Mission Road	3.747	3.778	0.031		
									100	TC_288/Sham & Prabha Shankar	1.042	1.071	0.030		
									500	TC_268/SUBBAIAH CIRCLE RAMANNA CLEX	35.431	35.700	0.269		
									250	TC_221/PRIYADARSHINI	3.375	3.464	0.089		
									250	TC_210/VARALAKSHMI	1.525	1.650	0.125		
									100	TC_220/INCOME TAX	0.775	0.810	0.035		
									100	TC_267/INCOME 3RD CROSS	0.438	0.470	0.033		
									250	TC_283/M/S Joy Thomas	117.211	117.312	0.101		
									100	TC_259/UNITY BUILDING 2ND	0.560	0.596	0.036		
									500	TC_242/UNITY BUILDING	0.925	1.168	0.243		
									250	TC_216/UNITY BUILDING	4.554	4.635	0.082		
									250	TC_265/INCOME TAX (ADDING TC)	11.967	12.101	0.134		

Sl. No.	Name of Division	Name of PSS	Voltage Level	PTR Capacity in MVA	Name of Outgoing 11 kV Feeder	A	B	C=B-A	Distribution Transformer Capacity in kVA/ Bulk	Distribution Transformer Location/ Code	D	E	F=E-D	G=C-∑F	% of 11 kV Loss w.r.t. Input Energy
						Initial Meter Reading at 11 kV side of PSS (LU)	Final Meter Reading at 11 kV side of PSS (LU)	Energy Consumption at 11 kV Outgoing Meter at Source End during Interval in LU			Initial meter reading at LT side of DTR (LU)	Final meter reading at LT side of DTR (LU)	Energy consumption at destination end during interval in LU.	11 kV Line Loss in LU	
									500	TC_299/Jindal Steel	1.068	2.353	1.285		
									63	TC_222/POORNIMA	0.752	0.779	0.026		
									250	TC_227/TOWN HALL	32.908	33.059	0.151		
									500	TC_230/TOWN HALL	7.727	9.136	1.410		
									500	TC_517/RAGHURAM SRINIVASA COLONY	2.020	3.368	1.349		
									250	TC_557/C.SAROJAMMA & OTHERS	31.819	31.937	0.118		
									250	TC_424/SRINIVASA COLONY IDBI	0.380	0.474	0.094		
									250	TC_496/COMFORT SHANTHI	2.057	2.158	0.101		
									250	TC_547/GOYQL FOUNDATION	7.089	7.197	0.108		
									250	TC_520/GUNAVATHI BALARAM	2.720	2.862	0.142		
									250	TC_441/CHENNAMMA SCHOOL NEW	2.969	3.052	0.082		
									500	TC_378/CHENNAMMA SCHOOL	29.574	31.876	2.302		
									500	TC_376/HINDUJA	29.588	29.727	0.139		
									250	TC_377/HINDUJA	71.048	71.206	0.158		
									250	TC_570/PHINIX HOSPITAL	10.130	10.236	0.106		
									250	TC_374/MUDDAPPA	68.075	68.186	0.111		
									250	TC_511/MOHAMMED ALI MEKHRI	1.136	1.224	0.087		
									250	TC_423/DOLLARS CHAMBER	3.868	3.960	0.092		
									63	TC_222/POORNIMA	0.057	0.104	0.048		
									250	TC_509/BALAKRISHNA	1.399	1.548	0.149		
									250	TC_375/LEESA APPRT	38.790	38.930	0.139		
									100	TC_588/ LAKSHMI VENKATESHWARA	5.568	5.603	0.034		
									250	TC_554/SAI MANSION	3.380	4.506	1.126		
									500	TC_572/SATHYANARAYANA	10.071	12.357	2.286		
										S2HT 003			0.230		
										S2HT 048			0.380		
										S2HT 131			0.210		
										S2HT 071			0.890		
										S2HT 58			0.980		
										S2HT 108			1.010		
										S2HT 189			0.990		
Sub-Total (7)						**1403.840**	**1423.395**	**19.555**					**18.826**	**0.729**	**3.730**
8	**Jayanagar**	**Adugodi**	66/11KV	3X20	**11 KV F10 Feeder**	**260.976**	**276.252**	**15.276**	100	TC-1/PRATHIKSHA APT	3.720	3.771	0.051	0.373	
									63	TC-3/SARA ROSE APT TC	4.356	4.423	0.067		
									100	TC-10/M.V. GOPALASWAMY WILSON GARDEN 12TH CROSS	0.590	0.674	0.083		
									63	TC-14/A.B.SURYA HOMBEGOWDA NAGAR	14.073	14.124	0.051		
									250	TC-16/ANITHA V. BABU	74.402	74.492	0.090		
									63	TC-17/LAKSHMI LAL JAIN	1.540	1.596	0.056		
									250	TC-21/BADAVARA SANGA	5.936	6.093	0.157		
									100	TC-23/T.R. NARASIMHAN	2.255	2.286	0.031		

Sl. No.	Name of Division	Name of PSS	Voltage Level	PTR Capacity in MVA	Name of Outgoing 11 kV Feeder	A	B	C=B-A	Distribution Transformer Capacity in kVA/ Bulk	Distribution Transformer Location/ Code	D	E	F=E-D	G=C-∑F	% of 11 kV Loss w.r.t. Input Energy
						Initial Meter Reading at 11 kV side of PSS (LU)	Final Meter Reading at 11 kV side of PSS (LU)	Energy Consumption at 11 kV Outgoing Meter at Source End during Interval in LU			Initial meter reading at LT side of DTR (LU)	Final meter reading at LT side of DTR (LU)	Energy consumption at destination end during interval in LU.	11 kV Line Loss in LU	
									250	TC-25/AKKAYAMMA TEMPLE TC	36.303	36.327	0.024		
									250	TC-26/11 TH CROSS WILSON GARDEN	70.159	70.214	0.056		
									250	TC-32/12TH CROSS WILSON GARDEN	1.279	1.430	0.151		
									63	TC-34/B. K. NARAYANASWAMY & PADMAVATHY	0.229	0.269	0.040		
									250	TC-35/SHARADAMMA & SRINIVASULU	0.718	0.818	0.101		
									100	TC-39/DARSHAN	2.660	2.700	0.040		
									100	TC-41/TR VIJAY KUMAR	21.570	21.612	0.042		
									100	TC-43/RAMNATH GUPTHA BYSANI	13.747	13.797	0.050		
									100	TC-45/MANJUNATH & OTHERS	26.930	26.970	0.040		
									63	TC-50/ELLINA DHANWALE	0.680	0.705	0.025		
									63	TC-54/VISHAL AGARWAL	0.121	0.167	0.046		
									100	TC-56/RAVIPRAKASH	2.034	2.069	0.036		
									100	TC-60/CHANDRASHEKAR	2.633	2.669	0.036		
									100	TC-62/J VENKATESH	0.293	0.307	0.014		
									100	TC-64/R. MOHD SHARIEFF & OTHERS	1.537	1.777	0.240		
									250	TC-65/RAVIPRAKASH & OTHERS	6.035	6.047	0.012		
									250	TC-102NIMHANS ADM BLOCK	3.575	3.679	0.104		
									250	TC-113/LAKKASANDRA 14TH CRS EXTN	33.041	33.159	0.118		
									250	TC-114/WILSONGARDEN 13TH CRS	24.561	24.650	0.089		
									250	TC-115/WILSONGARDEN 11TH CRS	33.606	33.708	0.102		
									500	TC-116/WILSONGARDEN 10TH CRS	6.597	7.883	1.286		
									500	TC-119/WILSONGARDEN 7TH CRS	158.202	160.366	2.163		
									250	TC-120/WILSONGARDEN 5TH CRS	52.629	53.711	1.082		
									250	TC-121/WILSONGARDEN 4TH CRS	7.910	8.992	1.082		
									500	TC-150/WILSON GARDEN 12TH CRS	0.500	1.808	1.308		
									100	TC-151/WILSON GARDEN 10TH CRS	1.797	1.819	0.022		
									250	TC-154/WILSON GARDEN 9TH CRS ROHINI APT	2.935	3.112	0.177		
									250	TC-159/WILSON GARDEN 2ND MN 6TH CRS	6.143	6.232	0.089		
									250	TC-163/4TH X LAKKASANDRA TC	61.281	61.365	0.084		
									100	TC-171/DAYANAND REDDY COMPLEX	3.684	3.720	0.036		
									100	TC-176/SHABARWAL INN 11TH X WG	2.297	2.333	0.036		
									100	TC-178/JAYALAKSHMI COMML.COMPLEX 10TH X W.G	2.490	2.534	0.043		
									250	TC-180/17TH CROSS L.S.SINGLE POLE TC	26.486	26.564	0.078		
									100	TC-184/BOSE COMP. S.P.T.C.	15.727	15.760	0.033		
									250	TC-190/4TH CROSS W.G S/P TC	3.309	3.437	0.129		
									250	TC-191/14TH CROSS LAKKASANDRA ADDL	6.508	6.741	0.233		
									100	TC-192/11TH CROSS W.G.ITI S/P TC	0.083	0.111	0.028		
									250	TC-196/VHM HOSPITALITY	7.197	7.279	0.082		
									100	TC-197/THIMMAKKA TC	12.065	12.099	0.033		
									250	TC-200/13TH CROSS T C	2.047	2.122	0.076		

Sl. No.	Name of Division	Name of PSS	Voltage Level	PTR Capacity in MVA	Name of Outgoing 11 kV Feeder	A	B	C=B-A	Distribution Transformer Capacity in kVA/ Bulk	Distribution Transformer Location/ Code	D	E	F=E-D	G=C-∑F	% of 11 kV Loss w.r.t. Input Energy
						Initial Meter Reading at 11 kV side of PSS (LU)	Final Meter Reading at 11 kV side of PSS (LU)	Energy Consumption at 11 kV Outgoing Meter at Source End during Interval in LU			Initial meter reading at LT side of DTR (LU)	Final meter reading at LT side of DTR (LU)	Energy consumption at destination end during interval in LU.	11 kV Line Loss in LU	
									100	TC-246/GRASSROOTS TC	2.461	2.520	0.059		
										S2HT 093			0.330		
										S2HT 125			0.450		
										S2HT 181			1.600		
										S2HT 109			0.990		
										S2HT 112			1.420		
Sub-Total (8)						**260.976**	**276.252**	**15.276**					**14.903**	**0.373**	**2.442**
9	**Jayanagar**	**Jayadeva**	66/11KV	4X20	**11 KV F4**	**195.275**	**207.608**	**12.333**	250	TC-121/JAI ANJANEYA	26.208	26.584	0.376		
									250	TC-24/RAIGUDDA	2.434	2.750	0.317		
									250	TC-151/SHILPA SREE	14.592	14.658	0.066		
									990	TC-09/MARKET	68.226	68.787	0.562		
									250	TC-41/CHANDMUL	26.376	26.510	0.134		
									250	TC-107/SOBA OPEL APP4	13.216	13.371	0.155		
									250	TC-108/SHOBHA OPEL APP5	9.603	9.751	0.148		
									250	TC-106/SHOBHA OPEL APP3	6.483	6.685	0.202		
									500	TC-104/SHOBHA OPEL APP1	9.446	9.512	0.066		
									250	TC-105/SHOBHA OPEL APP2	11.287	11.397	0.110		
									250	TC-128/SADANANDA	10.603	10.765	0.162		
									250	TC-08/MAYUR BAKERY	28.296	28.383	0.087		
									250	TC-49/BELLS CONTROL	36.297	36.448	0.151		
									250	TC-109/SATISH BABU	24.161	24.323	0.162		
									500	TC-02/VENUGOPAL	38.633	38.999	0.366		
									500	TC-15/IYENGER	25.508	25.785	0.277		
									500	TC-23/AMAR BABU	35.607	39.587	3.980		
									500	TC-22/18TH MN BED	56.210	57.124	0.914		
									250	TC-147/BHAGYASHREE	23.101	24.006	0.905		
									100	TC-169/GAYATRI	0.976	1.011	0.034		
									100	TC-167/PRATIK COMFORT HALL	4.477	4.503	0.026		
									250	TC-116/SUDARSHAN BED	1.195	1.287	0.091		
									250	TC-90/SUDARSHAN	2.740	2.815	0.075		
									500	TC-34/16TH MAIN 4 POLE	81.579	81.618	0.039		
									250	TC-38/CENCURION BANK	28.541	28.585	0.044		
									250	TC-39/LAXMI NIWASA APP	38.024	38.080	0.056		
									250	TC-117/BRINDAVAN APPTS	4.346	4.439	0.093		
									250	TC-37/JIYAUDDIN	4.115	4.118	0.003		
									250	TC-32/CANARA BANK	10.184	10.262	0.078		
									250	TC-71/NARAYANMURTHY	10.741	10.832	0.092		
									100	TC-72/WARD OFFICE	7.040	7.104	0.064		
									250	TC-91/BES COLLEGE	15.817	15.850	0.033		
									250	TC-44/CHURCH	40.288	40.345	0.056		

Sl. No.	Name of Division	Name of PSS	Voltage Level	PTR Capacity in MVA	Name of Outgoing 11 kV Feeder	A Initial Meter Reading at 11 kV side of PSS (LU)	B Final Meter Reading at 11 kV side of PSS (LU)	C=B-A Energy Consumption at 11 kV Outgoing Meter at Source End during Interval in LU	Distribution Transformer Capacity in kVA/ Bulk	Distribution Transformer Location/ Code	D Initial meter reading at LT side of DTR (LU)	E Final meter reading at LT side of DTR (LU)	F=E-D Energy consumption at destination end during interval in LU.	G=C-∑F 11 kV Line Loss in LU	% of 11 kV Loss w.r.t. Input Energy
									250	TC-48/AYESHA NOUSIN	34.605	34.675	0.070		
									500	TC-67/SHUBHRAJU	12.255	12.267	0.012		
									250	TC-115/SURAJ APPTS	70.122	70.141	0.019		
									500	TC-45/GOVINDAAPPA	87.003	87.086	0.084		
									500	TC-149/PAWANDAMA	10.807	11.204	0.398		
									250	TC-148/HYDRI	54.072	54.166	0.095		
									250	TC-50/ROOPKALA	6.295	6.307	0.012		
									250	TC-123/GPR SWAMY	7.180	7.225	0.045		
									100	TC-162/SHAM	1.954	2.010	0.055		
									100	TC-177/GOVINDA SINGLE	23.596	23.646	0.050		
									250	TC-180/RAMYA	7.899	7.980	0.080		
										HT 115			0.590		
Sub-Total (9)						**195.275**	**207.608**	**12.333**					**11.431**	**0.903**	**7.319**
10	**Jayanagar**	**S. Pura**	66/11KV	2X20	**11 KV F6 Remco**	**1346.373**	**1365.021**	**18.648**	250	TC_83/SHARADHANAGAR	1.793	1.899	0.106		
									100	TC_270/RAJENDRA BABU LAYOUT	0.345	0.375	0.031		
									100	TC_269/RAJENDRA BABU LAYOUT	2.590	2.618	0.028		
									100	TC_178/MUNIRAM BUILDING	6.892	6.926	0.034		
									100	TC_283/DAV SCHOOL	4.670	4.695	0.025		
									250	TC_84/ARCHANA APPARTMENT	3.650	3.766	0.116		
									63	TC_440/VISHNUVARDHAN	2.285	2.306	0.021		
									250	TC_85/AKHILA APARTMENTS	8.584	8.681	0.097		
									100	TC_399/PANKAJ K EDIA, BIKASIPURA	5.586	5.613	0.027		
									250	TC_225/AEE BDA BIKASIPURA	0.043	0.135	0.092		
									250	TC_227/AEE BDA BIKASIPURA	0.406	0.468	0.062		
									250	TC_418/C. BABU, K.K.CROSS	0.823	0.926	0.103		
									250	TC_126/MARUTHI LAYOUT	62.008	62.140	0.131		
									100	TC_176/BEHIND MANASA THEATRE	0.091	0.120	0.028		
									250	TC_177/RAMAIAH INDUSTRIAL	24.628	24.721	0.094		
									250	TC_87/KEMPARAJUHOUSE	45.774	45.881	0.107		
									250	TC_90/MANASATHEATRE	16.371	16.485	0.114		
									500	TC_91/D.V.G.HOSPITAL, K.K.CROSS	27.268	27.477	0.210		
									500	TC_95/JYOTHI T.C., D.K.SANDRA	2.775	2.911	0.136		
									250	TC_94/CANARABANK, K.K.CROSS	24.677	24.761	0.083		
									100	TC_97/VENKATESH TC, D.K.SANDRA	3.921	3.949	0.029		
									250	TC_96/HITECH D.K.SANDRA	0.749	0.844	0.095		
									250	TC_498/SUBBARAO D.K SANDRA	22.743	22.847	0.104		
									500	TC_100/MASTER PRODUCTS	38.683	39.202	0.518		
									100	TC_316/KOJEM A BADANI	0.048	0.068	0.019		
									250	TC_99/ASHOK D.K.SANDRA	3.034	3.157	0.123		
									250	TC_340/PRAKASH, Y.HALLI	6.301	6.364	0.063		

Sl. No.	Name of Division	Name of PSS	Voltage Level	PTR Capacity in MVA	Name of Outgoing 11 kV Feeder	A	B	C=B-A	Distribution Transformer Capacity in kVA/ Bulk	Distribution Transformer Location/ Code	D	E	F=E-D	G=C-∑F	% of 11 kV Loss w.r.t. Input Energy
						Initial Meter Reading at 11 kV side of PSS (LU)	Final Meter Reading at 11 kV side of PSS (LU)	Energy Consumption at 11 kV Outgoing Meter at Source End during Interval in LU			Initial meter reading at LT side of DTR (LU)	Final meter reading at LT side of DTR (LU)	Energy consumption at destination end during interval in LU.	11 kV Line Loss in LU	
									250	TC_98/BHARGAVI ENGG.	5.061	5.143	0.082		
									250	TC_103/MURUGA HOTEL	14.302	14.394	0.091		
									250	TC_104/LOTUS POWER GEAR	11.347	11.449	0.102		
									250	TC_400/MUNIRAMAIAH	0.245	0.302	0.057		
									500	TC_105/GANESHA TEMPLE	58.740	59.196	0.456		
									250	TC_106/MAKALE SCHOOL	0.467	0.564	0.097		
									250	TC_305/SWAROOP KUMAR REDDY	0.310	0.372	0.062		
									250	TC_367/D SRINIVAS, KUVEMP	2.538	2.631	0.093		
									250	TC_324/DODDAKALLASANDRA NEAR	4.663	4.748	0.084		
									100	TC_369/PNEUCON BREAKS	1.280	1.308	0.028		
									100	TC_384/D. NARASIMHALU NAIDU	1.726	1.760	0.034		
									100	TC_385/D. NARASIMHALU NAIDU	1.455	1.489	0.033		
									250	TC_109/SINGAPORE LAYOUT	5.663	5.746	0.083		
									250	TC_110/SINGAPORE LAYOUT	3.575	3.688	0.113		
									250	TC_150/SINGAPORE GARDEN	4.969	5.091	0.122		
									250	TC_149/SINGAPORE GARDEN	1.031	1.103	0.071		
									250	TC_426/K.THIMMASHETTY	0.370	0.489	0.119		
									250	TC_151/JEEVAN SANDHYA	2.628	2.740	0.112		
									250	TC_414/YELLAMMA DASAPPA OPP.	0.588	0.655	0.067		
									250	TC_204/RAGHUVANALLI SARALA	3.746	3.854	0.107		
									100	TC_427/WEIGHBRIDGE	6.520	6.557	0.037		
									500	TC_107/GUPTA BOLTS, D.K.SANDRA	8.428	8.771	0.343		
									250	TC_368/SATHYANARAYA HEGDE	0.362	0.413	0.051		
										HT 15			0.220		
										HT 69			0.930		
										HT 86			1.800		
										HT 56			2.300		
										HT 61			3.090		
										HT 04			0.560		
										HT 106			0.780		
										HT 67			0.812		
										HT 39			0.770		
										HT 66			1.690		
Sub-Total (10)						**1346.373**	**1365.021**	**18.648**					**17.991**	**0.657**	**3.522**
TOTAL [(Sub-Total (1) to (10)] =								**132.874**					**126.469**	**6.405**	**4.820**
Jayanagar Division 11 kV side Input Energy								**2090.673**		**Jayanagar Division 11 kV Line Loss w.r.t. Total Input Energy (11 kV side)**				**100.774**	**4.820**

Sl. No.	Name of Division	Name of PSS	Voltage Level	PTR Capacity in MVA	Name of Outgoing 11 kV Feeder	A	B	C=B-A	Distribution Transformer Capacity in kVA/ Bulk	Distribution Transformer Location/ Code	D	E	F=E-D	G=C-∑F	% of 11 kV Loss w.r.t. Input Energy
						Initial Meter Reading at 11 kV side of PSS (LU)	Final Meter Reading at 11 kV side of PSS (LU)	Energy Consumption at 11 kV Outgoing Meter at Source End during Interval in LU			Initial meter reading at LT side of DTR (LU)	Final meter reading at LT side of DTR (LU)	Energy consumption at destination end during interval in LU.	11 kV Line Loss in LU	
1	KML	NGV	66/11KV	2x20	11 KV F 11 KML Slum	902.476	915.620	13.144	500	TC-50/8TH BLOCK 80 FT ROAD	7.609	8.842	1.233	0.570	
									250	TC-112/8TH BLOCK,SLUM	1.255	1.408	0.153		
									63	TC-190/KAVERI PETROL PUMP	17.030	17.091	0.061		
									100	TC-251/RAJENDRA NAGAR SLUM	0.163	0.225	0.061		
									250	TC-147/NAGAR(KML SLUM)	36.543	36.840	0.297		
									250	TC-70/ DR. AMEDKAR	52.378	52.479	0.100		
									250	TC-142/EJIPURA SLUM	63.172	63.325	0.153		
									100	TC-40/BCC HOT MIX PLANT	1.700	1.758	0.058		
									250	TC-144/EWS QUARTERS 1	1.074	1.175	0.101		
									250	TC-145/EWS QUARTERS 2	1.251	1.368	0.117		
									250	TC-30/KORMANGLA VILLAGE 1	6.309	6.396	0.087		
									100	TC-252/LR NAGAR SLUM	0.140	0.250	0.110		
									250	TC-360/MARIYAMMA TEMPLE	10.738	10.828	0.089		
									250	TC-146/EWS QUARTERS 3	0.775	0.919	0.145		
									100	TC-355/1ST MAIN NANJAPPA LAY	1.298	1.338	0.041		
									100	TC-315/AEE, BWSSB, LR NAGAR	5.036	5.207	0.171		
									250	TC-110/KML SLUM	27.901	28.101	0.200		
									100	TC-430/KML SLUM	23.596	23.652	0.055		
									250	TC-150/RAJENDRA NAGAR SLUM	1.112	1.201	0.089		
									100	TC-426/VIJYA LAXMI	1.511	1.592	0.081		
									100	TC-402/171 8TH BLOCK	0.069	0.134	0.065		
									500	TC-28/KORMANGLA VILLAGE 2	108.602	110.797	2.195		
									250	TC-27/MALLAPA, REDDY LAYOUT	7.198	7.297	0.099		
									100	TC-392/N SAILAIJA NANJAPPA	0.433	0.531	0.098		
									250	TC-197/NEAR NDRI COMPOUND	4.355	4.496	0.142		
									100	TC-365/PRP SUBAIYA	0.904	0.976	0.072		
									250	TC-34/BATHROOM, RAJENDRA	5.246	5.422	0.177		
									100	TC-185/80 FT 8TH BLOCK	6.252	6.429	0.177		
									250	TC-446/ 80 FT 8TH BLOCK	1.639	2.550	0.911		
									63	TC-387/BABULAL GUPTHA	2.095	2.185	0.090		
									100	TC-404/BABULAL GUPTHA	9.296	9.950	0.654		
									100	TC-317/MADHAV REDDY	23.660	23.789	0.130		
									250	TC-429/MADHAV REDDY	0.227	0.503	0.277		
										S4HT 120			0.234		
										S4HT 85			0.339		
										S4HT 404			0.989		
										S4HT 437			0.900		
										S4HT 168			1.234		
										S4HT 314			0.389		
Sub-Total (1)						**902.476**	**915.620**	**13.144**					**12.574**	**0.570**	**4.336**

Sl. No.	Name of Division	Name of PSS	Voltage Level	PTR Capacity in MVA	Name of Outgoing 11 kV Feeder	A	B	C=B-A	Distribution Transformer Capacity in kVA/ Bulk	Distribution Transformer Location/ Code	D	E	F=E-D	G=C-∑F	% of 11 kV Loss w.r.t. Input Energy
						Initial Meter Reading at 11 kV side of PSS (LU)	Final Meter Reading at 11 kV side of PSS (LU)	Energy Consumption at 11 kV Outgoing Meter at Source End during Interval in LU			Initial meter reading at LT side of DTR (LU)	Final meter reading at LT side of DTR (LU)	Energy consumption at destination end during interval in LU.	11 kV Line Loss in LU	
2	KML	Austin Town	66/11 KV	3X20	11 KV F7-Austin	17.259	36.923	19.664	250	TC-566/CHARU JASMINE/250	0.997	4.049	3.052		
									250	TC-431/SALEHA ARCHARD TC/250	1.377	1.987	0.610		
									100	TC-493/RABBANI JILANI APT/100	6.168	6.227	0.059		
									100	TC-304/LARALLEL LANE APRTS-1/100	17.431	17.566	0.134		
									100	TC-305/LARALLEL LANE ST-2/100	9.858	9.958	0.099		
									250	TC-583/KHANS MOHMMED ABDULL KHAN/250	14.126	14.300	0.174		
									250	TC-311/MYTRE LANE/250	11.444	11.588	0.143		
									100	TC-309/KHADHER MOHIUDDIN /100	3.662	3.662	0.000		
									250	TC-464/CASABLANKA APT/250	70.206	70.769	0.563		
									100	TC-500/RAZIA BEGUM/100	11.226	11.397	0.171		
									250	TC-429/BUSH COURT APPRT /250	21.224	21.454	0.230		
									63	TC-486/REHANA SHERIEFF53/63	6.703	6.813	0.110		
									500	TC-308/RICHMOND PARK TC/500	6.586	6.842	0.256		
									100	TC-310/SONA PALACE APPRT TC/100	4.683	4.721	0.038		
									250	TC-314/JHONSON MARKET TC/250	3.531	3.835	0.304		
									250	TC-313/PARAGON RESIDENCY/250	5.150	5.402	0.252		
									250	TC-413/TAWAKAL APPT TC/250	5.899	6.061	0.162		
									250	TC-477/SAGAR MUTTAPPA/250	21.971	22.178	0.207		
									250	TC-408/REGENCY HOUSE APPRT/250	1.829	1.994	0.165		
									250	TC-418/NISHANTH CORPN APPRT/250	2.809	3.282	0.473		
									100	TC-458/SOVERIGN(KHODAYS) /100	10.070	10.183	0.113		
									250	TC-302/WELLINGTON ST TC/250	2.126	2.313	0.187		
									250	TC-303/WELLINGTON COURT APT/250	1.077	1.341	0.264		
									100	TC-444/HASAN ALI APT/100	0.137	0.204	0.067		
									500	TC-301/WELLINGTON PARK APT/500	56.002	56.919	0.917		
									100	TC-416/KINGSTON MANOR APT/100	14.756	14.838	0.082		
									500	TC-307/KAMADHENU APPT TC/500	21.497	21.667	0.170		
									100	TC-454/LILLY THOMAS/100	2.579	2.699	0.120		
									100	TC-563/KEVIN VAS /100	0.197	0.237	0.039		
									250	TC-306/THOMAS MANOR APPT/250	7.802	7.889	0.087		
									100	TC-471/AVINASH PRASKI APT/100	2.950	2.999	0.048		
									250	TC-456/BAILEYRHENIUS ST. NEW TC/250	25.977	26.648	0.671		
									250	TC-553/REGENCY PAVALION APT/250	26.672	26.864	0.193		
									250	TC-535/SHABJADI RUKIYA BEGUM LEONARD LANE/250	36.294	36.541	0.247		
									250	TC-435/DINAKARAN APARTMENT/250	2.743	3.304	0.561		
									250	TC-312/VICTORIA VILLA APPT/250	1.977	2.402	0.425		
									500	TC-516/MAHAJABEEN SULTHANA ALEXANDRIYA ST/500	66.530	67.849	1.319		
									250	TC-419/REGENCY HEVAN APT TC/250	3.347	3.969	0.622		
									250	TC-474/ZITA FERNANDEES/250	3.654	3.823	0.169		
									100	TC-463/GOLD PLAZA/100	9.256	9.331	0.074		
									250	TC-564/MILLICENT/250	2.561	2.722	0.161		

Sl. No.	Name of Division	Name of PSS	Voltage Level	PTR Capacity in MVA	Name of Outgoing 11 kV Feeder	A	B	C=B-A	Distribution Transformer Capacity in kVA/ Bulk	Distribution Transformer Location/ Code	D	E	F=E-D	G=C-∑F	% of 11 kV Loss w.r.t. Input Energy
						Initial Meter Reading at 11 kV side of PSS (LU)	Final Meter Reading at 11 kV side of PSS (LU)	Energy Consumption at 11 kV Outgoing Meter at Source End during Interval in LU			Initial meter reading at LT side of DTR (LU)	Final meter reading at LT side of DTR (LU)	Energy consumption at destination end during interval in LU.	11 kV Line Loss in LU	
									100	TC-551/ZAREEN RESIDENSY /100	2.268	2.328	0.060		
									100	TC-531/WELLINGTON STREET TC/100	1.880	1.933	0.053		
									63	TC-576/FAQRULLA KHAN/63	2.640	2.693	0.053		
									250	TC-512/PRATHIBA.S.MOOLA APT/250	5.407	5.546	0.139		
									100	TC-505/MUSHARATH NAVEED/100	19.726	19.760	0.034		
										HT 180			1.432		
										HT 40			0.667		
										HT 203			0.843		
										HT 49			1.765		
Sub-Total (2)						**17.259**	**36.923**	**19.664**					**18.784**	**0.880**	**4.474**
3	**KML**	**St. John Wood**	66/11 KV	2X20	11 KV F 8 Tavarekere	283.444	302.690	19.246	250	TC-83/BHOVI COLONY	61.251	61.420	0.169		
									250	TC-158/RAJIYER LAYOUT	24.669	24.802	0.133		
									250	TC-181/RAJIYER LAYOUT 2	36.294	36.438	0.144		
									250	TC-183/PRASANNA KUMARA REDDY	7.199	7.381	0.182		
									250	TC-97/BALA REDDY S G PALYA	0.540	0.685	0.145		
									500	TC-137/S.A. ANAND,1 CRS	4.402	4.892	0.489		
									100	TC-111/N RAMA REDDY	2.936	2.970	0.034		
									100	TC-193/CAUVERY LAYOUT	26.531	26.589	0.058		
									250	TC-223/VITTAL NAGAR	0.353	0.599	0.245		
									100	TC-121/MAHAVEER INFRASTRUCTURE	0.233	0.269	0.036		
									100	TC-171/WAJIDAHMED	2.931	2.994	0.063		
									250	TC-14/CAUVERY LAYOUT	1.963	2.146	0.184		
									100	TC-18/BHUVANAPPA LAYOUT	0.329	0.359	0.030		
									250	TC-16/KRISHNA NAGAR	5.238	5.400	0.162		
									250	TC-224/RAJESWARI	0.434	0.642	0.208		
									250	TC-162/WATER TANK, CAUVERY LAYOUT	6.213	6.375	0.162		
									250	TC-184/BEHIND WATER TANK	9.876	10.045	0.169		
									100	TC-38/TAVARKHERE	22.975	23.025	0.049		
									100	TC-13/MADIVALA JOGI COLONY	26.993	27.027	0.034		
									250	TC-271/ N.A	2.898	3.133	0.235		
									500	TC-274/GOPALAKRISHNA APPT.	73.939	74.496	0.558		
									250	TC-124/BALAJINAGAR BOVI COLONY	10.781	10.951	0.170		
									250	TC-42/BHOVI COLONY	14.215	14.358	0.143		
									500	TC-255/SURESH BABU, BIKASIPURA	2.096	2.656	0.560		
									250	TC-15/PARK TC, K.N.LAYOUT	3.643	3.823	0.180		
									250	TC-265/DAYANANDA	3.501	3.685	0.184		
									250	TC-187/VENKETESHWAR TEMPLE	58.529	58.816	0.287		
									500	TC-301/TAVARKHERE LAYOUT	15.286	15.776	0.490		
									100	TC-40/TAVARKHERE PIPE FACTORY	2.629	2.669	0.039		

Sl. No.	Name of Division	Name of PSS	Voltage Level	PTR Capacity in MVA	Name of Outgoing 11 kV Feeder	A	B	C=B-A	Distribution Transformer Capacity in kVA/ Bulk	Distribution Transformer Location/ Code	D	E	F=E-D	G=C-∑F	% of 11 kV Loss w.r.t. Input Energy
						Initial Meter Reading at 11 kV side of PSS (LU)	Final Meter Reading at 11 kV side of PSS (LU)	Energy Consumption at 11 kV Outgoing Meter at Source End during Interval in LU			Initial meter reading at LT side of DTR (LU)	Final meter reading at LT side of DTR (LU)	Energy consumption at destination end during interval in LU.	11 kV Line Loss in LU	
									100	TC-186/APARNA V REDDY	0.137	0.183	0.045		
									250	TC-200/GURVA REDDY	11.229	11.527	0.297		
									63	TC-37/TAVARKHERE	4.130	4.154	0.025		
									250	TC-125/PILLAPPA REDDY	3.675	3.928	0.254		
									250	TC-133/K. H. RAMESH	1.534	1.752	0.217		
									100	TC-41/BALAJI NAGAR OLD	0.703	0.766	0.063		
									250	TC-126/ANJANEYA TEMPLE	8.990	9.265	0.275		
									250	TC-242/Subramanya D & Hari, K.N.Layout	4.908	5.096	0.188		
									100	TC-252/LEELA, TAVARKHERE	10.369	10.398	0.029		
									100	TC-71/SIDDAGUNDE PALYA	6.211	6.303	0.092		
									100	TC-109/D.C. HALLY	23.596	23.623	0.027		
									250	TC-31/TAVARKHERE BRIDGE	16.890	17.072	0.182		
									100	TC-101/DEVARA IYER	1.707	1.737	0.031		
									100	TC-39/TAVARKHERE BCC	1.430	1.455	0.025		
									100	TC-305/DEVNANDA & OTHERS	29.135	29.187	0.051		
									100	TC-227/N.SHIVARAMAREDDU	2.330	2.367	0.038		
									100	TC-154/MARY PHILIP & OTHERS	5.034	5.072	0.038		
									250	TC-270/BADRINATH APPT	1.101	1.235	0.133		
									100	TC-159/H.N.VIJAYARAGAVAREDDY	0.384	0.429	0.045		
									100	TC-169/TEAM EXPORTS	2.967	2.990	0.024		
										HT 159			2.897		
										HT 149			1.664		
										HT 432			0.996		
										HT 312			3.320		
										HT 268			1.229		
										HT 287			0.334		
										HT 342			0.444		
Sub-Total (3)						**283.444**	**302.69**	**19.246**					**18.506**	**0.740**	**3.842**
4	**KML**	**K & C Valley**	66/11KV	4X20	11 KV F2-Ejipura	1108.197	1109.401	1.204	100	TC 118/KRISHNNA REDDY	1.026	1.057	0.031		
									100	TC 142/NAGAGUTTA	0.040	0.071	0.030		
									250	TC 108/KRISHNA REDDY	4.559	4.575	0.016		
									250	TC 95/ASHWANI LAYOUT II	11.485	11.502	0.017		
									100	TC 137/D.KRISHNA REDDY TC	0.570	0.606	0.036		
									100	TC 153/M RAMASWAMY APP	0.072	0.106	0.035		
									100	TC 158/NO NAME	2.329	2.369	0.040		
									250	TC 76/ASHWINI LAYOUT	2.773	2.815	0.042		
									250	TC 129/SREE PROMOTORS	1.851	1.869	0.018		
									250	TC 154/ABDUL KHALLID APP	0.135	0.151	0.016		
									250	TC 100/ADITYA APP I	21.112	21.121	0.010		
									250	TC 86/C.R.LAYOUT 1ST	0.383	0.441	0.058		

Sl. No.	Name of Division	Name of PSS	Voltage Level	PTR Capacity in MVA	Name of Outgoing 11 kV Feeder	A	B	C=B-A	Distribution Transformer Capacity in kVA/ Bulk	Distribution Transformer Location/ Code	D	E	F=E-D	G=C-∑F	% of 11 kV Loss w.r.t. Input Energy
						Initial Meter Reading at 11 kV side of PSS (LU)	Final Meter Reading at 11 kV side of PSS (LU)	Energy Consumption at 11 kV Outgoing Meter at Source End during Interval in LU			Initial meter reading at LT side of DTR (LU)	Final meter reading at LT side of DTR (LU)	Energy consumption at destination end during interval in LU.	11 kV Line Loss in LU	
									250	TC 165/SAI NATH CONS	6.332	6.354	0.022		
									250	TC 101/ADITHYA APP II	45.114	45.161	0.047		
									250	TC 94/RAJ PUNAJABI ASHWINI LAYOUT	21.451	21.464	0.014		
									250	TC 63/GOWRAMA	3.062	3.105	0.043		
									100	TC 178/KARUNAKA REDDY	0.854	0.886	0.032		
									100	TC 109/NOOR AHAMAD MEA	1.785	1.816	0.031		
									100	TC 164/VENKAT KRISHNA REDDY	2.517	2.551	0.033		
									250	TC 106/LAXMANNA	14.702	14.710	0.008		
									250	TC 126/V.SUJAY KRISHNA&OTHER	0.786	0.805	0.019		
									100	TC 134/T A VIJAY KUMAR	2.284	2.319	0.035		
									100	TC 177/TA VIJAY KUMAR APP	11.277	11.309	0.031		
									100	TC 143/MORONI LAWRENCE	19.615	19.648	0.033		
									63	TC 132/K.CHANDRA SHEKAR	0.225	0.248	0.023		
									100	TC 162/RAMESH APP	2.218	2.252	0.034		
									250	TC 56/RAJ MOHAN	2.098	2.129	0.030		
									100	TC 135/SYEAD METHAN SRINIVAGILU	2.842	2.872	0.030		
									250	TC 113/KT RAM RAJ	0.658	0.706	0.048		
									250	TC 12/SRINIVAGILU VILLAGE I	19.735	19.753	0.018		
									250	TC 136/BHARDARAJ TC	27.071	27.108	0.036		
									63	TC 91/RING ROAD I(STREET LIGHT I)	0.174	0.200	0.027		
									63	TC 92/STREET LIGHT II	0.851	0.879	0.029		
									100	TC 176/AMIT AGARWAL APP	0.520	0.553	0.032		
										HT 120			0.153		
Sub-Total (4)						**1108.197**	**1109.401**	**1.204**					**1.158**	**0.046**	**3.795**
5	**KML**	**Amarjyoti**	66/11KV	3X20	11 KV F1-Ejipura	467.317	472.083	4.766	100	TC-247/SRINIVAGILU LAYOUT 1	14.450	14.477	0.027		
									250	TC-371/PRAVEEN INFRASTRUCTURE	5.878	5.973	0.095		
									250	TC-284/HEMAVATHI K.V. HALL	1.454	1.610	0.155		
									100	TC-369/MALLIKARJUNA HOUSE	1.266	1.289	0.023		
									250	TC-254/SRINIVAGILU LAYOUT 2	1.325	1.496	0.171		
									250	TC-286/VENKATESH IYER	16.492	16.697	0.204		
									250	TC-400/JYOTHISHWAR REDDY	0.595	0.661	0.066		
									250	TC-53/K N MUNIREDDY	9.872	10.040	0.167		
									100	TC-239/KIDNEY FOUNDATION	0.363	0.401	0.038		
									100	TC-380/N.C.VARADARAJU	13.709	13.740	0.031		
									100	TC-313/ANANDA & OTHERS	4.011	4.035	0.024		
									100	TC-240/B.S REDDY	0.981	1.019	0.038		
									100	TC-442/SRINIVAGILU NAGAR	0.473	0.781	0.308		
									100	TC-423/KS LAYOUT SRINIVAGILU 1	0.706	0.750	0.043		
									500	TC-238/N.P.BHUJENDRA NOIDU	36.922	37.446	0.523		

Sl. No.	Name of Division	Name of PSS	Voltage Level	PTR Capacity in MVA	Name of Outgoing 11 kV Feeder	A	B	C=B-A	Distribution Transformer Capacity in kVA/ Bulk	Distribution Transformer Location/ Code	D	E	F=E-D	G=C-∑F	% of 11 kV Loss w.r.t. Input Energy
						Initial Meter Reading at 11 kV side of PSS (LU)	Final Meter Reading at 11 kV side of PSS (LU)	Energy Consumption at 11 kV Outgoing Meter at Source End during Interval in LU			Initial meter reading at LT side of DTR (LU)	Final meter reading at LT side of DTR (LU)	Energy consumption at destination end during interval in LU.	11 kV Line Loss in LU	
									250	TC-237/KS LAYOUT SRINIVAGILU 2	43.202	43.283	0.081		
									100	TC-236/M.V SRINIVAS APP	1.290	1.328	0.038		
									100	TC-401/K.V.BHAT, BIKASIPURA	2.504	2.544	0.040		
									100	TC-369/ROAD KANAKA NAGAR	1.266	1.289	0.023		
									100	TC-415/NEAR TEMPLE	2.024	2.060	0.035		
										S4HT 440			0.801		
Sub-Total (5)						**467.317**	**472.083**	**4.766**					**2.931**	**0.184**	**3.856**
6	**KML**	**HAL**	66/11KV	3X31.5	11 KV F7 Airport Road	521.587	533.101	11.514	500	TC-02/ RAJESHWARI/500	23.381	25.129	1.748		
									500	TC-17/SNS ARCADE A BLOCK/500 KVA	25.129	27.038	1.909		
									500	TC-02/ RAJESHWARI/500	2.716	3.019	0.304		
									250	TC-180/G DAMADARAN/250 KVA	1.455	1.678	0.223		
									100	AIRPOT ENTERANCE/100 KVA	3.064	3.093	0.029		
									250	TC-83/VENKATESH T.C(JUBLI MRIDIAN)/250 KVA	10.048	10.523	0.475		
									100	TC-126/VIKHUND/100 KVA	5.669	5.738	0.069		
									250	TC-112/VARS 1ST/250 KVA	0.707	0.831	0.124		
									250	TC-113/VARS 2ST/250 KVA	11.205	11.761	0.556		
									250	TC-139/SHIVA DHARSHINI/250 KVA	0.547	0.589	0.042		
									250	TC-12/VISHVESHWARYA HIGH SCHOOL/250 KVA	5.238	5.340	0.102		
									250	TC-41/SRI RAMANAGRI/250 KVA	0.629	0.790	0.161		
									250	TC-122/SATHYANDRANATH APP/250 KVA	0.903	1.057	0.154		
									250	TC-123/SRINIWAS RESIDENCY/250 KVA	74.913	75.016	0.103		
									250	TC-109/MPL RASNA STORE/250 KVA	42.133	42.697	0.564		
									250	TC-247/SURESH BABU/250 KVA	2.515	2.584	0.070		
									250	TC-194/RATTANAMA WIND TUNNEL ROAD/250 KVA	34.497	35.003	0.506		
									250	TC-182/SRINIDHI CONSTR/250 KVA	2.460	2.503	0.043		
									250	KOHINOOR APP/250 KVA	3.223	3.487	0.264		
									250	SHANT KUMAR APP/250 KVA	7.894	8.067	0.174		
									250	TC-4/KATTA/250 KVA	0.798	0.989	0.190		
									500	TC-48/RITTO ARUNA B/500 KVA	3.408	3.649	0.241		
									250	TC-84/VINAYAKA.N/250 KVA	37.135	37.484	0.349		
									250	RIPCO ARUNA COMPOUND/250 KVA	18.764	18.852	0.089		
									250	RAMESH/250 KVA	0.540	0.615	0.075		
										HT 03			0.117		
										HT 97			0.321		
										HT 43			0.551		
										HT 44			0.883		
										HT 50			0.543		
Sub-Total (6)						**521.587**	**533.101**	**11.514**					**10.977**	**0.537**	**4.660**

Sl. No.	Name of Division	Name of PSS	Voltage Level	PTR Capacity in MVA	Name of Outgoing 11 kV Feeder	A	B	C=B-A	Distribution Transformer Capacity in kVA/ Bulk	Distribution Transformer Location/ Code	D	E	F=E-D	G=C-∑F	% of 11 kV Loss w.r.t. Input Energy
						Initial Meter Reading at 11 kV side of PSS (LU)	Final Meter Reading at 11 kV side of PSS (LU)	Energy Consumption at 11 kV Outgoing Meter at Source End during Interval in LU			Initial meter reading at LT side of DTR (LU)	Final meter reading at LT side of DTR (LU)	Energy consumption at destination end during interval in LU.	11 kV Line Loss in LU	
	KML	**Golf**	66/11KV	1x20	11 KV F3 - Ramaiah	366.601	399.301	32.700	500	TC-73/KR GARDEN BANK COLONY	88.075	89.000	0.925	1.484	
									100	TC-185/NEW RUNWAY COMPOUND	8.710	9.031	0.321		
									100	TC-96/RUNWAY COMPOUND	18.288	18.304	0.016		
									100	TC-275/DIVYA MUTH ANNA	0.128	0.151	0.023		
									100	TC-188/KANTHAMA	0.354	0.578	0.224		
									250	TC-189/KANTHAMA	1.904	2.575	0.671		
									250	TC-261/C LOKESHA ASHOK AVENUE	0.884	1.616	0.732		
									500	TC-236/Y ALLAMA	36.033	36.617	0.584		
									250	TC-123/N.A	75.010	75.123	0.113		
									250	TC-40/AMARDHAM CHARITABLE	54.228	54.400	0.171		
									250	TC-88/AMARDHAM CHARITABLE	0.295	0.336	0.041		
									250	TC-111/VINAYAK NAGAR	54.656	63.366	8.711		
									100	TC-274/VARSHA DEVELOPERS	0.274	0.340	0.066		
									250	TC-168/VM VENKATESH	0.925	1.596	0.672		
									250	TC-195/SAPTHAGIRI APPT	6.514	7.402	0.888		
									100	TC-271/MS JEEVANADI ENTERPRISE	0.431	0.750	0.319		
									250	TC-157/AIR VIEW COLONY	115.256	115.746	0.490		
									250	TC-86/MSIL EXPORT	0.721	1.154	0.434		
									250	TC-85/SUNIL	35.009	35.978	0.969		
									100	TC-130/RUNWAY COMPOUND	7.607	8.229	0.622		
									100	TC-260/KONKENAGARAHARA	3.706	3.763	0.057		
									100	TC-235/RAVI SHANKER	3.885	4.451	0.566		
									250	TC-156/VIDYA BRIADHAR	8.615	8.759	0.144		
									100	TC-150/SHIDRAJU	11.754	11.784	0.030		
									500	TC-106/GAYATRI MESS COLONY	22.608	22.968	0.360		
									100	TC-138/SAI KURPPA	9.355	10.167	0.812		
									100	TC-118/NAJJAPPA	0.392	0.567	0.175		
									100	TC-54/NAGARAJA REDDY	2.315	2.676	0.360		
									250	TC-76/RAMAIYAH REDDY	1.309	2.208	0.899		
									250	TC-134/JM RESIDENCY	4.534	4.717	0.183		
									100	TC-72/RUBBY NEST	0.730	0.902	0.173		
									250	TC-59/PINE WOOD APP	0.543	0.712	0.169		
									250	TC-255/SRI MUNIYAPPA	7.102	7.183	0.082		
									250	TC-169/VINAYAKA NAGAR	4.219	4.456	0.237		
									100	TC-121/PR LAYOUT	0.069	0.158	0.088		
										HT 543			5.324		
										HT 564			4.567		
Sub-Total (7)						**366.601**	**399.301**	**32.700**					**31.216**	**1.484**	**4.539**
TOTAL [Sub-Total (1) to (7)]								**102.238**					**96.147**	**4.439**	**4.342**
KML Division 11 KV side Input Energy								**1490.521**	**KML Division 11 kV Line Loss w.r.t. Total Input Energy (11 kV side)**					**64.721**	**4.342**

Sl. No.	Name of Division	Name of PSS	Voltage Level	PTR Capacity in MVA	Name of Outgoing 11 kV Feeder	A	B	C=B-A	Distribution Transformer Capacity in kVA/ Bulk	Distribution Transformer Location/ Code	D	E	F=E-D	G=C-∑F	% of 11 kV Loss w.r.t. Input Energy
						Initial Meter Reading at 11 kV side of PSS (LU)	Final Meter Reading at 11 kV side of PSS (LU)	Energy Consumption at 11 kV Outgoing Meter at Source End during Interval in LU			Initial meter reading at LT side of DTR (LU)	Final meter reading at LT side of DTR (LU)	Energy consumption at destination end during interval in LU.	11 kV Line Loss in LU	
1	HSR	South City(I&T)	66/11KV	1x20	11 KV F7	282.027	289.631	7.604	250	TC-1/SHANTINIKETAN AREKAR/250 KVA	3.338	3.568	0.229	0.337	
									250	TC-285/SHANTINIKETAN.MSB.AR/250 KVA	0.254	0.776	0.521		
									250	TC-284/SHANTI/250 KVA	8.607	8.719	0.112		
									250	TC-283/SHANTINIKETAN/250 KVA	0.664	0.716	0.052		
									250	TC-10/SHANTINIKETAN ARAKERE/250 KVA	0.957	1.023	0.066		
									250	TC-64/SETHURAM & VASANTHI MSB/250 KVA	1.419	1.985	0.566		
									250	TC-02/SHANTINIKETAN ARAKERE/250 KVA	2.978	3.186	0.207		
									250	TC-03/SHANTINIKETAN ARAKERE/250 KVA	3.093	3.304	0.211		
									100	TC-883/M. SHANTALAKSHMI/100 KVA	3.335	3.396	0.061		
									250	TC-04/SHANTINIKETAN ARAKERE/250 KVA	4.540	4.646	0.106		
									100	TC-915/BALARAJ NOIDU & OTHERS/100 KVA	3.833	3.901	0.068		
									100	TC-05/AMRUTHA EDUCATION/100 KVA	1.358	1.453	0.094		
									250	TC-09/SHANTINIKETAN ARAKERE/250 KVA	2.555	2.968	0.413		
									100	TC-830/SHASHIDHAR MSB/100 KVA	5.394	5.482	0.089		
									100	TC-483/BALAJI MS BUILDING/100 KVA	0.231	0.266	0.036		
									100	TC-46/CHANAPPA TC ARAKERE/100 KVA	2.000	2.036	0.035		
									250	TC-427/BEHIND TEA BAKERY/250 KVA	7.456	7.966	0.509		
									250	TC-428/ BDA/ 250 KVA	10.741	10.926	0.186		
									100	TC-144/ANANADA B MOOVA SHANTI NIKETAN/100 KVA	0.265	0.311	0.046		
									100	TC-802/RAMARAJU/100 KVA	3.342	3.388	0.046		
									100	TC-43/DEVARACHIKKANAHALLI/100 KVA	1.678	1.780	0.102		
									100	TC-944/A.SEETHARAMARAO MSB/100 KVA	2.236	2.274	0.038		
									250	TC-134/AMRUTHA EDUCATION/250 KVA	3.338	3.617	0.279		
									100	TC-06/SHANTINIKETAN ARAKERE/100 KVA	0.127	0.169	0.042		
									250	TC-08/SHANTINIKETAN ARAKERE/250 KVA	2.876	3.358	0.481		
									250	TC-07/SHANTINEKETAN ARAKERE/250 KVA	0.184	0.808	0.625		
									100	TC-605/WINDSOR GARDEN PVT LTD/100 KVA	3.600	3.644	0.044		
										HT 151			1.443		
										HT 50			0.558		
SUB TOTAL (1)						**282.027**	**289.631**	**7.604**					**7.267**	**0.337**	**4.437**
2	HSR	BTM	66/11KV	2x20	11 KV F-10-Sathyasai	30.567	52.329	21.762	250	TC-332/PUTTASWAMY JELLY	3.436	3.688	0.252	1.013	
									250	TC-367/BDA	4.445	4.599	0.154		
									250	TC-365/BDA	1.347	1.434	0.087		
									250	TC-364/BDA	0.187	0.358	0.170		
									250	TC-366/BDA	0.821	0.874	0.053		
									250	TC-636/CHOUDAMMA &	13.763	13.921	0.159		
									100	TC-921/BABURAO GOTTIGERE	0.040	0.093	0.053		
									100	TC-75/M.VENKATAPPA MSB BTM	9.769	9.825	0.055		
									100	TC-56/C.GOPAL MSB BTM 4TH	0.843	0.931	0.088		
									63	TC-209/ANILKUMAR & OTHERS MSB	20.275	20.314	0.038		

Sl. No.	Name of Division	Name of PSS	Voltage Level	PTR Capacity in MVA	Name of Outgoing 11 kV Feeder	A	B	C=B-A	Distribution Transformer Capacity in kVA/ Bulk	Distribution Transformer Location/ Code	D	E	F=E-D	G=C-∑F	% of 11 kV Loss w.r.t. Input Energy
						Initial Meter Reading at 11 kV side of PSS (LU)	Final Meter Reading at 11 kV side of PSS (LU)	Energy Consumption at 11 kV Outgoing Meter at Source End during Interval in LU			Initial meter reading at LT side of DTR (LU)	Final meter reading at LT side of DTR (LU)	Energy consumption at destination end during interval in LU.	11 kV Line Loss in LU	
									500	TC-975/N.P.BHUJENDRA NOIDU MDB	10.775	11.036	0.261		
									250	TC-841/PRAKASH & OTHERS MSB	1.583	1.684	0.101		
									250	TC-842/PRAKASH & OTHERS MSB	1.897	2.009	0.112		
									250	TC-369/BDA	4.399	4.491	0.093		
									250	TC-27/ANANDA B.MOVVA MSB	6.606	6.751	0.145		
									250	TC-361/BDA	3.331	3.556	0.224		
									500	TC-165/DEVARA CHIKKANAHALLY	21.168	21.554	0.386		
									100	TC-731/K.SHIVARAMAREDDU	0.740	0.787	0.047		
									250	TC-335/K.SHIVARAMAREDDY D.C.	17.961	18.197	0.236		
									250	TC-783/ANANDA & JANARADHANA	7.882	8.013	0.132		
									250	TC-784/ANANDA & JANARADHANA	6.327	6.427	0.100		
									100	TC-785/ANANDA & JANARADHANA	1.566	1.592	0.026		
									100	TC-357/PETROL BUNK D.C.HALLI	2.361	2.399	0.038		
									100	TC-663/NEAR SBI TC MSB	1.318	1.338	0.019		
									250	TC-280/D.C. HALLY, SBI	6.537	7.177	0.640		
									100	TC-610/K.PRAVEEN D.C.HALLI	4.072	4.128	0.056		
									63	TC-876/R.CHKRAPANI MSB D.C.HALLI	0.021	0.045	0.024		
									250	TC-79/SRIVARI INFRASTRUCTURE	1.093	1.193	0.100		
									100	TC-53/KRISHNAREDDY MSB	1.074	1.074	0.000		
									100	TC-861/H.N.VIJAYARAGAVAREDDY	2.033	2.067	0.034		
									100	TC-832/C.RAJENDRA MSB	5.522	5.564	0.042		
									250	TC-314/K.C. HALLI PADMA	15.479	15.639	0.160		
									250	TC-350/HEMAVATHI K.C. HALLI	16.787	16.916	0.129		
									63	TC-24/SAI BABU	22.736	23.296	0.560		
										HT 304			0.643		
										HT 308			0.798		
SUB TOTAL (2)						**30.567**	**52.329**	**21.762**					**20.749**	**1.013**	**4.653065**
3	**HSR**	**Anjanpura**	66/11KV	2x16	11 KV F4 8th Block	67.540	72.380	4.840	100	TC-403/JUDICIAL LAYOUT 2ND	0.842	0.889	0.047		
									100	TC-703/JUDICIAL LAYOUT 2ND	1.200	1.224	0.024		
									100	TC-402/JUDICIAL LAYOUT 2ND	6.189	6.535	0.347		
									250	TC-405/JUDICIAL LAYOUT 2ND	0.128	0.216	0.088		
									100	TC-396/JUDICIAL LAYOUT 2ND	0.133	0.180	0.047		
									100	TC-349/VAKIL LAYOUT	0.093	0.131	0.038		
									100	TC-404/JUDICIAL LAYOUT 2ND	0.802	0.855	0.053		
									250	TC-406/JUDICIAL LAYOUT 2ND	0.023	0.025	0.002		
									100	TC-339/VAKIL LAYOUT	0.114	0.135	0.022		
									100	TC-340/VAKIL LAYOUT	0.300	0.321	0.021		
									100	TC-347/VAKIL LAYOUT	0.203	0.217	0.014		
									100	TC-341/VAKIL LAYOUT	0.211	0.225	0.014		
									100	TC-342/VAKIL LAYOUT	0.137	0.148	0.011		

Sl. No.	Name of Division	Name of PSS	Voltage Level	PTR Capacity in MVA	Name of Outgoing 11 kV Feeder	A	B	C=B-A	Distribution Transformer Capacity in kVA/ Bulk	Distribution Transformer Location/ Code	D	E	F=E-D	G=C-∑F	% of 11 kV Loss w.r.t. Input Energy
						Initial Meter Reading at 11 kV side of PSS (LU)	Final Meter Reading at 11 kV side of PSS (LU)	Energy Consumption at 11 kV Outgoing Meter at Source End during Interval in LU			Initial meter reading at LT side of DTR (LU)	Final meter reading at LT side of DTR (LU)	Energy consumption at destination end during interval in LU.	11 kV Line Loss in LU	
									100	TC-343/VAKIL LAYOUT	0.154	0.177	0.023		
									100	TC-354/VAKIL LAYOUT	0.263	0.278	0.015		
									100	TC-348/VAKIL LAYOUT	0.196	0.207	0.011		
									100	TC-349/VAKIL LAYOUT	0.534	0.570	0.037		
									100	TC-344/VAKIL LAYOUT	0.145	0.158	0.013		
									100	TC-345/VAKIL LAYOUT	0.311	0.371	0.060		
									100	TC-346/VAKIL LAYOUT	2.321	2.345	0.024		
									100	TC-353/VAKIL LAYOUT	0.440	0.469	0.029		
									100	TC-352/VAKIL LAYOUT	0.167	0.179	0.012		
									100	TC-351/VAKIL LAYOUT	0.107	0.117	0.010		
									100	TC-350/VAKIL LAYOUT	0.510	0.530	0.019		
									250	TC-09/VAJARA MUNESHWARA GATE	40.236	40.813	0.577		
									250	TC-90/T PARAMOUNT GARDEN	2.595	2.634	0.040		
									250	TC-91/T PARAMOUNT GARDEN	12.034	12.904	0.870		
									250	TC-36/JYOTI LAYOUT	0.438	0.540	0.102		
									250	TC-176/ANJANAPUR BDA LAYOUT	0.225	0.264	0.039		
									250	TC-177/ANJANAPUR BDA LAYOUT	2.408	2.520	0.112		
									250	TC-122/ANJANAPUR BDA LAYOUT	1.461	1.542	0.081		
									250	TC-142/ANJANAPUR BDA LAYOUT	1.208	1.309	0.101		
									250	TC-154/ANJANAPUR BDA LAYOUT	0.772	0.874	0.102		
										HT 117			0.138		
										HT 83			0.710		
										HT 04			0.321		
										HT 44			0.228		
										HT 128			0.1260		
										HT 136			0.1130		
Sub-Total (3)						**67.540**	**72.380**	**4.840**					**4.642**	**0.198**	**4.101**
HSR Division Total [Sub-Total (1) to (3)]								**34.206**					**32.658**	**1.548**	**4.527**
HSR Division 11 kV side Input Energy								**818.754**	**HSR Division 11 kV Line Loss w.r.t. Total Input Energy (11 kV side)**					**37.064**	**4.527**
Banglore South Circle 11KV side Input Energy								**4239.000**	**Banglore South Circle 11 kV Line Loss w.r.t. Total Input Energy (11 kV side)**					**202.560**	**4.778**

Note : *Initial & Final Meter Reading Values are multiplied with Meter Multiplication Factor (MF).*

11 kV LINE LOSS ASSESSMENT
OF
HUBLI CIRCLE
IN
KARNATAKA STATE

STUDY ON COMPONENT-WISE AT&C LOSSES ASSESSMENT FOR THE STATE OF KARNATAKA

C. 11 kV LINE LOSS ASSESSMENT (including DTR Loss) DETAIL OF HUBLI CIRCLE

Sl. No.	Name of Division	Name of PSS	Voltage Level	PRT Capacity in MVA	Name of Outgoing 11 kV Feeder	A	B	C = B-A	Distribution Transformer Capacity in kVA/ Bulk	Distribution Transformer Location/ Code	D	E	F=E-D	C-F	% of 11 kV Loss w.r.t. Input Energy
						Initial meter reading at 11 kV side of PSS (LU)	Final meter reading at 11 kV side of PSS (LU)	Energy consumption at 11 kV outgoing meter at source end during interval in LU			Initial meter reading at LT side of DTR (LU)	Final meter reading at LT side of DTR (LU)	Energy consumption at destination end during interval in LU	11 kV Line loss in LU	
1	DHARWAD	USA DHARWAD	33/11 KV	10 MVA	11 kV Agri Feeder - F1	343.097	346.465	3.368	25	G Block-1	0.161	0.200	0.039	0.190	5.655
2									25	A Block	0.087	0.107	0.020		
3									25	B Block	0.510	0.555	0.044		
4									25	D Block	0.211	0.265	0.054		
5									25	Campus Stadium	0.086	0.114	0.029		
6									25	G Block-2	0.471	0.519	0.048		
7									63	Kurubetta IPSET	0.461	0.519	0.058		
8									63	Bhavi	0.748	0.810	0.062		
9									63	Yettinagudda P G Hostel	0.887	0.933	0.045		
10									63	State Bank	0.961	1.226	0.265		
11									63	DIARY	0.261	0.296	0.035		
12									63	Animal science	0.162	0.175	0.013		
13									63	Ladies Hostel	0.379	0.401	0.021		
14									63	Newfarmers Hostel	0.486	0.525	0.039		
15									63	Redden Project	0.946	1.027	0.081		
16									63	Input Office	1.303	1.410	0.106		
17									63	Organic-2	0.057	0.181	0.123		
18									63	Scientist Home	0.088	0.126	0.038		
19									100	Veterary	1.826	1.958	0.132		
20									100	MRS Office	0.536	0.628	0.093		
21									100	IABT	0.975	1.114	0.139		
22									100	BIO GAS	3.047	3.215	0.169		
23									100	SWARGAM	0.431	0.491	0.060		
24									100	Yettinagudda Village TC	3.166	3.226	0.060		
25									100	International Hostel	0.488	0.530	0.042		
26									100	Library	0.898	0.955	0.058		
27									100	Godown-1	0.605	0.661	0.056		
28									100	Godown-2	0.257	0.353	0.096		
29									100	Organic-1	0.454	0.480	0.026		
30									100	Shrumica	0.205	0.240	0.035		
31									100	Garage TC	0.964	1.063	0.098		
32									200	C Block	3.724	4.113	0.389		
33									250	V C Bunglow	1.570	1.908	0.338		
34									250	Garden	2.335	2.603	0.267		
SUB-TOTAL (1)						**343.097**	**346.465**	**3.368**			**29.747**	**32.924**	**3.177**	**0.190**	**5.655**

Sl. No.	Name of Division	Name of PSS	Voltage Level	PRT Capacity in MVA	Name of Outgoing 11 kV Feeder	A	B	C = B-A	Distribution Transformer Capacity in kVA/ Bulk	Distribution Transformer Location/ Code	D	E	F=E-D	C-F	% of 11 kV Loss w.r.t. Input Energy
						Initial meter reading at 11 kV side of PSS (LU)	Final meter reading at 11 kV side of PSS (LU)	Energy consumption at 11 kV outgoing meter at source end during interval in LU			Initial meter reading at LT side of DTR (LU)	Final meter reading at LT side of DTR (LU)	Energy consumption at destination end during interval in LU	11 kV Line loss in LU	
1	DHARWAD	UAS DHARWAD	33/11 KV	10 MVA	11 KV Killa Feeder - F2	80.672	81.814	1.142	25	PATIL IP	0.135	0.150	0.015	0.068	5.948
2									25	G T L TOWER(WIRE LESS TT IN	0.512	0.532	0.020		
3									25	KALLIMANE TOWER	0.226	0.242	0.016		
4									25	BHAGAVATHI IP	0.000	0.000	0.000		
5									63	SHAIKH LAYOUT-1	0.025	0.038	0.013		
6									63	AGRI PHD HOSTEL Y-GUDDA	0.127	0.138	0.011		
7									63	VRL OFFICE	0.080	0.096	0.016		
8									63	R K PATEL	0.102	0.120	0.018		
9									63	DURGAMBIKA COMPLEX	1.211	1.250	0.039		
10									63	KITUR CHAL	1.217	1.267	0.050		
11									63	MALAPUR MAIN 1ST	0.539	0.578	0.038		
12									100	RAJ NAGAR	1.826	1.876	0.050		
13									100	SONAPUR	1.984	2.016	0.032		
14									100	MEHABOOB NAGAR-2	3.685	3.717	0.032		
15									100	SHAIKH LAYOUT-3	0.027	0.030	0.003		
16									100	SHAIKH LAYOUT-4	0.001	0.004	0.003		
17									100	SHAIKH LAYOUT-2	0.000	0.000	0.000		
18									100	AGADI	2.358	2.361	0.003		
19									100	LADVA	3.013	3.018	0.005		
20									100	B.G. DODDAMANI APARTMEN	0.871	0.953	0.082		
21									100	BELLAD	2.613	2.656	0.043		
22									100	PANDITH KHER	1.445	1.499	0.054		
23									100	RAMANA GOWDARA	0.478	0.513	0.035		
24									100	RAMANA GOWDARA Apt	0.143	0.175	0.032		
25									100	KOPPADAKERI JANATHA PLOT	4.519	4.600	0.081		
26									100	M B NAGAR	2.202	2.282	0.079		
27									100	HALABHAVI	3.689	3.812	0.122		
28									100	MASUTHI Malapur	2.158	2.240	0.082		
29									100	APMC Malapur 2ND	2.334	2.392	0.059		
30									100	KALLIMANE	3.372	3.413	0.041		
31									250	Civil Hospital HT	0.000	0.000	0.000		
SUB-TOTAL (2)						**80.672**	**81.814**	**1.142**			**40.891**	**41.965**	**1.074**	**0.068**	**5.948**
1	DHARWAD	USA DHARWAD	33/11 KV	10 MVA	11 KV Pepsi Feeder -	672.802	685.457	12.655	15	KUSUGAL IP SET-2	0.012	0.014	0.002	0.797	6.299
2									15	KUSUGAL IP SET 1	0.009	0.016	0.007		
3									25	AGREE FARMER HOSTEL	0.176	0.207	0.031		
4									25	KARNATKA AGRO	0.006	0.007	0.000		
5									25	SIDDARTHA TOWER TC	0.591	0.629	0.038		
6									25	TOWER POLICE SOCIETY	0.241	0.254	0.013		
7									25	TOWER SAIDAPUR	0.079	0.096	0.017		
8									25	TOWER SUB JAIL ROAD	0.397	0.431	0.033		
9									63	ADITYA ARCADE	0.171	0.181	0.010		

Sl. No.	Name of Division	Name of PSS	Voltage Level	PRT Capacity in MVA	Name of Outgoing 11 kV Feeder	A	B	C = B-A	Distribution Transformer Capacity in kVA/ Bulk	Distribution Transformer Location/ Code	D	E	F=E-D	C-F	% of 11 kV Loss w.r.t. Input Energy
						Initial meter reading at 11 kV side of PSS (LU)	Final meter reading at 11 kV side of PSS (LU)	Energy consumption at 11 kV outgoing meter at source end during interval in LU			Initial meter reading at LT side of DTR (LU)	Final meter reading at LT side of DTR (LU)	Energy consumption at destination end during interval in LU	11 kV Line loss in LU	
10									63	GOLIBAR	0.856	1.216	0.360		
11									63	GTC AGRO KARNATAKA	0.191	0.206	0.016		
12									63	HIGHTEC AGREE	0.420	0.449	0.029		
13									63	IRKAL HOSPITAL	0.222	0.247	0.025		
14									63	MUKAMBIKA NAGAR 3	1.095	1.248	0.153		
15									63	N G TYRES	2.769	2.937	0.168		
16									63	More layout-2	0.000	0.000	0.000		
17									63	More layout-4	0.001	0.187	0.186		
18									63	Ghatage Layout	0.031	0.174	0.143		
19									100	ANKITHA RESIDENCY	0.569	0.609	0.040		
20									100	ANKOLA COMPLEX	0.293	0.345	0.052		
21									100	BELGUM TOLLNAKA	2.834	2.948	0.114		
22									100	CHADDA MOTORS	2.261	2.424	0.163		
23									100	DEVAKI ANNEX	0.086	0.386	0.300		
24									100	GOLLARAKERI	1.185	1.278	0.092		
25									100	HAMPANAVARA LAYOUT 1	0.002	0.509	0.507		
26									100	HAMPANAVARA LAYOUT 2	0.026	0.451	0.424		
27									100	HAMPANNAVAR LAYOUT 3	0.055	0.355	0.300		
28									100	HAMPANNAVAR LAYOUT 4	0.279	0.284	0.004		
29									100	JIGLUR LAYOUT 2	0.001	0.307	0.306		
30									100	JIGLUR LAYOUT 3	0.004	0.454	0.450		
31									100	JIGLUR LAYOUT1	0.001	0.399	0.398		
32									100	KAMATH BAKERY	2.530	2.620	0.090		
33									100	KARNATAKA BEEJNIGAM-1	0.063	0.077	0.014		
34									100	KARNATAKA BEEJNIGAM-2	0.429	0.462	0.033		
35									100	KUMARESHWARA NAGAR-1	1.585	1.751	0.166		
36									100	KUMARESHWARA NAGAR 2	4.458	4.658	0.201		
37									100	KURAHATTI APARTMENT	0.014	0.029	0.015		
38									100	L M L SHOW ROOM	2.395	2.578	0.183		
39									100	MB NAGAR (mestri)	2.211	2.327	0.115		
40									100	MEHBOOB NAGAR 1	2.542	2.814	0.272		
41									100	MG BANK	2.460	2.652	0.191		
42									100	MUKAMBIKA NAGAR 1	0.868	0.932	0.064		
43									100	MUKAMBIKA NAGAR 2	0.357	0.387	0.030		
44									100	NAYAK & COMPANY	1.753	1.872	0.119		
45									100	SAINIKA COLONY 1	0.282	0.306	0.024		
46									100	SAINIKA COLONY 2	0.000	0.296	0.296		
47									100	SIDDARTHA COLONY	0.408	0.433	0.025		
48									100	SUB JAIL QUTRS 1	0.226	0.244	0.018		
49									100	SUB JAIL QUTRS 2	0.274	0.290	0.017		
50									100	SUB JAIL ROAD	1.429	1.570	0.142		
51									100	Atmanand Layout-1	0.002	0.407	0.405		

Sl. No.	Name of Division	Name of PSS	Voltage Level	PRT Capacity in MVA	Name of Outgoing 11 kV Feeder	A	B	C = B-A	Distribution Transformer Capacity in kVA/ Bulk	Distribution Transformer Location/ Code	D	E	F=E-D	C-F	% of 11 kV Loss w.r.t. Input Energy
						Initial meter reading at 11 kV side of PSS (LU)	Final meter reading at 11 kV side of PSS (LU)	Energy consumption at 11 kV outgoing meter at source end during interval in LU			Initial meter reading at LT side of DTR (LU)	Final meter reading at LT side of DTR (LU)	Energy consumption at destination end during interval in LU	11 kV Line loss in LU	
52									100	Atmanand Layout-2	0.024	0.353	0.329		
53									100	Atmanand Layout-3	0.010	0.305	0.294		
54									100	More layout-1	0.000	0.000	0.000		
55									100	More layout-3	0.001	0.268	0.267		
56									100	Patil Layout-1	0.001	0.370	0.369		
57									100	Patil Layout-2	0.001	0.277	0.276		
58									100	Vaibhav complex	0.227	0.244	0.017		
59									200	MRBC COLONY	0.434	0.517	0.083		
60									250	GTC	0.945	1.049	0.104		
61									250	GULAGANJI KOPPA	5.509	6.214	0.705		
62									250	GYMKHANA	2.856	3.245	0.390		
63									250	MORE OIL MILL	0.270	0.313	0.044		
64									250	OLD TELEPHONE EXCHANGE	2.775	3.895	1.120		
65									250	ROTSON APARTMENT	3.042	3.399	0.357		
66									250	SAIDAPUR-250	4.604	5.176	0.572		
67									250	SOMESHWARA APARTMENT	1.721	1.848	0.127		
SUB-TOTAL (3)						**672.802**	**685.457**	**12.655**			**61.568**	**73.426**	**11.858**	**0.797**	**6.299**
1	DHARWAD	KUD	110/11 KV		Basaveshwara	592.708	602.853	10.145	25	Boyar IP	0.014	0.015	0.001	0.755	7.437
2									63	KSCB Sriramnagar	0.000	0.000	0.000		
3									63	Akshaya Arcade	0.396	0.436	0.040		
4									63	Aditya Arcade	0.257	0.274	0.017		
5									63	UCB Complex New	0.082	0.096	0.013		
6									63	Huggi Complex	0.146	0.176	0.030		
7									63	Muttagi complex	0.636	0.724	0.088		
8									63	Shree Appartment	0.129	0.138	0.008		
9									63	Indraprastha Hotel	0.234	0.249	0.015		
10									63	Trikal Agencies	0.975	1.054	0.079		
11									63	Haripriya Appartment	0.067	0.073	0.006		
12									63	NISARGA LAYOUT TC.NO.07 1	0.000	0.000	0.000		
13									63	JAMUNATHA NAGAR TC	0.640	0.701	0.062		
14									63	PURNA PRAGNYA 112203060	0.104	0.114	0.010		
15									63	BHAVANI APPARTMENT	0.181	0.198	0.017		
16									63	TIWAC COLONY TC.NO 02	0.081	0.178	0.097		
17									63	VARADHA APPARTMENT TC	0.033	0.042	0.009		
18									63	BASAPPA KHAANAVALLI	0.164	0.173	0.009		
19									63	JANARDHAN ARCADE	1.261	1.359	0.098		
20									63	BSNL OFFICE	0.973	1.125	0.152		
21									100	Bikanawar	0.770	0.851	0.081		
22									100	Vasan Eye Care	0.599	0.639	0.040		
23									100	Kittur Complex ICICI (HT)	0.000	0.000	0.000		
24									100	Geeta Complex	0.613	0.671	0.058		

Sl. No.	Name of Division	Name of PSS	Voltage Level	PRT Capacity in MVA	Name of Outgoing 11 kV Feeder	A	B	C = B-A	Distribution Transformer Capacity in kVA/ Bulk	Distribution Transformer Location/ Code	D	E	F=E-D	C-F	% of 11 kV Loss w.r.t. Input Energy
						Initial meter reading at 11 kV side of PSS (LU)	Final meter reading at 11 kV side of PSS (LU)	Energy consumption at 11 kV outgoing meter at source end during interval in LU			Initial meter reading at LT side of DTR (LU)	Final meter reading at LT side of DTR (LU)	Energy consumption at destination end during interval in LU	11 kV Line loss in LU	
25									100	Kittur Complex	0.264	0.324	0.060		
26									100	Elmeca 1	1.015	1.103	0.088		
27									100	Elmeca 2	0.000	0.000	0.000		
28									100	Sriramnagar Masooti	1.663	1.782	0.119		
29									100	Tulajabhavani	0.000	0.000	0.000		
30									100	Elmeca	1.015	1.269	0.254		
31									100	Danunagar 1	1.242	1.504	0.262		
32									100	Danunagar Idle TC	0.001	0.090	0.089		
33									100	Vanadevata Appartment TC	0.539	0.597	0.058		
34									100	Kamalapur spun pole	1.662	1.810	0.148		
35									100	Kamalapur Lingaraj Press	1.191	1.274	0.083		
36									100	Canara Bank	1.411	1.609	0.198		
37									100	Shalmala Spun pole	1.310	1.409	0.099		
38									100	Sanmati Marg	1.325	1.526	0.202		
39									100	Palanakar Appartment	0.040	0.198	0.158		
40									100	Huddar Old	2.567	2.805	0.237		
41									100	Vignarajendra Appartment	1.619	1.748	0.128		
42									100	Pooja Appartment	0.212	0.318	0.106		
43									100	Basavanal	2.090	2.529	0.440		
44									100	Brindavan Hotel	0.658	0.760	0.101		
45									100	DK Naikar Complex (Renuka)	1.098	1.179	0.081		
46									100	Shantinagar	2.046	2.417	0.372		
47									100	Raichur Layout	0.296	0.466	0.170		
48									100	Laxmisinganakeri(Makadwala)	1.724	1.997	0.272		
49									100	U.C.B.Complex Old	0.383	0.533	0.151		
50									100	Gurudatta Appartment New	0.163	0.279	0.116		
51									100	S.T.T.F.	0.060	0.221	0.161		
52									100	Patravali (Railway)	1.265	1.318	0.054		
53									100	Pratima Galaxy	0.000	0.000	0.000		
54									100	Kapali Mission Compound	0.054	0.273	0.219		
55									100	Karandikar Appartment	0.148	0.226	0.079		
56									100	HANUMANTHA NAGAR TC.NO	1.149	1.268	0.119		
57									100	HANUMANTHA NAGAR TC.NO	1.052	1.158	0.106		
58									100	NISARGA LAYOUT TC.NO 09	0.141	0.224	0.083		
59									100	NISARGA LAYOUT TC.NO 08	0.023	0.059	0.035		
60									100	NISARGA LAYOUT TC.NO 10	0.045	0.054	0.009		
61									100	NISARGA LAYOUT TC.NO.01	0.006	0.039	0.032		
62									100	NISARGA LAYOUT TC.NO.03	0.087	0.160	0.074		
63									100	NISARGA LAYOUT TC.NO.04	0.046	0.151	0.105		
64									100	NISARGA LAYOUT TC.NO.05	0.075	0.295	0.220		
65									100	NISARGA LAYOUT TC.NO.06	0.162	0.291	0.129		
66									100	NISARGA LAYOUT TC.NO.02	0.036	0.060	0.023		

Sl. No.	Name of Division	Name of PSS	Voltage Level	PRT Capacity in MVA	Name of Outgoing 11 kV Feeder	A	B	C = B-A	Distribution Transformer Capacity in kVA/ Bulk	Distribution Transformer Location/ Code	D	E	F=E-D	C-F	% of 11 kV Loss w.r.t. Input Energy
						Initial meter reading at 11 kV side of PSS (LU)	Final meter reading at 11 kV side of PSS (LU)	Energy consumption at 11 kV outgoing meter at source end during interval in LU			Initial meter reading at LT side of DTR (LU)	Final meter reading at LT side of DTR (LU)	Energy consumption at destination end during interval in LU	11 kV Line loss in LU	
67									100	NISARGA LAYOUT TC.NO.11	0.092	0.114	0.022		
68									100	NISARGA LAYOUT TC.NO.12	0.124	0.231	0.107		
69									100	KALYAN NAGAR 7 TH CROSS T	1.089	1.359	0.270		
70									100	YASH KARAN TC .NO 2	0.070	0.085	0.015		
71									100	YASH KARAN TC .NO 1	0.416	0.468	0.053		
72									100	TIWAC COLONY TC.NO 01	0.112	0.212	0.100		
73									100	KALYAN NAGAR 10 TH CROSS	0.262	0.314	0.052		
74									100	KALYAN NAGAR 8 TH CROSS T	0.866	0.883	0.017		
75									100	VISHWAS APPARTMENT	0.226	0.277	0.051		
76									100	KALYAN NAGAR 8 TH CROSS S	2.368	2.658	0.291		
77									100	BHANASHANKARI TC	0.234	0.292	0.059		
78									100	PAVAN COLONY TC	0.092	0.139	0.047		
79									100	SHALMALA COLONY TC	0.156	0.188	0.032		
80									100	HALBHAVI COLONY TC	0.312	0.387	0.075		
81									100	KRISHNAN MANSION MITTI CO	0.372	0.409	0.037		
82									100	BASAPPA KHAANAVALLI	0.807	1.013	0.206		
83									100	DISTRIC PANCHAYAT	1.188	1.345	0.157		
84									250	Shankar Plaza	1.469	1.619	0.150		
85									250	Sriram Nagar 250	4.026	4.331	0.305		
86									250	Kamalapur 250	1.729	1.898	0.169		
87									250	K.C.C 250	0.488	0.542	0.054		
88									250	Pawan Enclaive	0.352	0.708	0.356		
89									250	Shalmala 250	0.403	0.678	0.275		
90									250	Gurudatta Appartment Old 2	0.463	0.589	0.126		
SUB-TOTAL (4)						**592.708**	**602.853**	**10.145**			**55.958**	**65.348**	**9.390**	**0.755**	**7.437**
1	DHARWAD	MRUTHYUMJAY	110/11 KV		Murgamath	319.989	325.049	5.060	25	Raj Nagar Docomo	0.405	0.441	0.036	0.364	7.198
2									25	Raj Nagar Relience	0.093	0.106	0.013		
3									63	Myadar oni	0.320	0.352	0.032		
4									63	Adhishakthi Nagar 4	0.015	0.019	0.003		
5									63	Gayakwad Pantap	0.017	0.025	0.008		
6									100	Goller colony 3	2.651	2.853	0.202		
7									100	Halegadang TC	1.767	2.194	0.427		
8									100	Soudagar TC	3.107	3.410	0.304		
9									100	Madhihal Last bust stop	2.451	2.808	0.357		
10									100	Raj Nagar	1.014	1.230	0.216		
11									100	More Plot	6.417	7.103	0.686		
12									100	APMC Gate Deepa Hotel	2.769	2.935	0.167		
13									100	Muragamath	0.000	0.000	0.000		
14									100	Zinning |Mill	1.397	1.506	0.110		
15									100	KSRTC Depo	3.794	4.058	0.265		
16									100	Mallikarjun Nagar	1.238	1.322	0.084		

Sl. No.	Name of Division	Name of PSS	Voltage Level	PRT Capacity in MVA	Name of Outgoing 11 kV Feeder	A	B	C = B-A	Distribution Transformer Capacity in kVA/ Bulk	Distribution Transformer Location/ Code	D	E	F=E-D	C-F	% of 11 kV Loss w.r.t. Input Energy
						Initial meter reading at 11 kV side of PSS (LU)	Final meter reading at 11 kV side of PSS (LU)	Energy consumption at 11 kV outgoing meter at source end during interval in LU			Initial meter reading at LT side of DTR (LU)	Final meter reading at LT side of DTR (LU)	Energy consumption at destination end during interval in LU	11 kV Line loss in LU	
17									100	MoreOil mill	5.381	5.883	0.503		
18									100	Moorsavirmath	1.350	1.641	0.291		
19									100	Haveri Peth	2.979	3.236	0.258		
20									100	Adhishakthi Colony-1	0.297	0.330	0.034		
21									100	Adhishakthi Colony-2	0.384	0.422	0.038		
22									100	Adhishakthi Colony-3	0.147	0.161	0.015		
23									100	Adhishakthi Nagar 1	0.179	0.212	0.033		
24									100	Adhishakthi Nagar 2	0.000	0.000	0.000		
25									100	Adhishakthi Nagar 3	0.045	0.064	0.019		
26									250	Jhoshi mangala Karyalay	4.017	4.615	0.598		
SUB-TOTAL (5)						**319.989**	**325.049**	**5.06**			**42.232**	**46.928**	**4.696**	**0.364**	**7.198**
1	DHARWAD	KUD	110/11 KV		Pabatenagar	159.242	161.576	2.334	25	GARDEN TC 11220304003	0.312	0.335	0.024	0.160	6.839
2									25	BSNL TOWER	0.000	0.207	0.207		
3									63	WORKING WOMENS HOSTEL 11220304022	0.986	1.055	0.069		
4									63	GANESH NAGAR TC 112501127	1.595	1.688	0.093		
5									63	D TYPE QUARTERS	2.425	2.535	0.111		
6									63	PRESS TC 112501130	0.772	0.814	0.043		
7									63	BASAVA BHAVAN	0.016	0.018	0.001		
8									63	SILVER JUBILEE TC	0.164	0.176	0.012		
9									63	Patil IP	0.000	0.000	0.000		
10									100	F TYPE QUARTERS 112601126	0.336	0.359	0.023		
11									100	SWIMMING FOOL TC	3.862	4.098	0.235		
12									100	E TYPE QUARTERS 112601128	1.574	1.804	0.230		
13									100	SPORTS CENTER 112601131	0.085	0.088	0.003		
14									100	D.N.A TC	0.744	0.804	0.060		
15									100	NIJALINGAPPA HOSTEL 11220304016	1.962	2.126	0.164		
16									100	LIBRARY TC 1126030412	0.000	0.000	0.000		
17									100	KANAKA BHAVAN TC 112601145	0.052	0.059	0.006		
18									100	MCA BLOCK 112601134	1.609	1.725	0.116		
19									100	VIVEKA PEETA BLOCK	0.015	0.132	0.118		
20									100	USIC TC.NO 1 11220304023	1.170	1.240	0.070		
21									100	USIC TC.NO 2	0.484	0.497	0.013		
22									100	RANICHANNAMA 11220304012	2.121	2.280	0.159		
23									100	SHALMALA HOSTEL	1.718	1.882	0.164		
24									100	Bashav Bhavan	0.213	0.234	0.021		

Sl. No.	Name of Division	Name of PSS	Voltage Level	PRT Capacity in MVA	Name of Outgoing 11 kV Feeder	A	B	C = B-A	Distribution Transformer Capacity in kVA/ Bulk	Distribution Transformer Location/ Code	D	E	F=E-D	C-F	% of 11 kV Loss w.r.t. Input Energy
						Initial meter reading at 11 kV side of PSS (LU)	Final meter reading at 11 kV side of PSS (LU)	Energy consumption at 11 kV outgoing meter at source end during interval in LU			Initial meter reading at LT side of DTR (LU)	Final meter reading at LT side of DTR (LU)	Energy consumption at destination end during interval in LU	11 kV Line loss in LU	
25									250	Chemestry TC	2.371	2.603	0.233		
SUB-TOTAL (6)						**159.242**	**161.576**	**2.334**					**2.174**	**0.160**	**6.839**
1	DHARWAD	TADASINAKOPPA	110/11 KV		SDM	653.443	663.090	9.6472	25	INDUS TOWER TC	0.059	0.100	0.041	0.629	6.516
2									25	RELINCE TOWER TC	0.097	0.147	0.050		
3									25	DOCOMO TOWER	0.010	0.046	0.036		
4									63	METI TC	0.006	0.083	0.077		
5									63	CONFEDANCE GAS BVUNK TC	0.006	0.119	0.112		
6									63	KHNDPURYA TC	0.015	0.079	0.064		
7									63	JINGOUDAR TC	0.020	0.143	0.123		
8									63	GTM APPARMENT TC	0.019	0.045	0.027		
9									63	SECTER NO 2	0.033	0.072	0.039		
10									63	SECTER NO 2	0.020	0.036	0.016		
11									63	ANJENAYA NAGAR TC	0.000	0.056	0.055		
12									63	DANJI PLYWOOD TC	0.024	0.107	0.083		
13									63	SHIVANGOUDA PATIL IP TC	0.005	0.206	0.201		
14									63	POLTRY FPRM TC	0.079	0.135	0.056		
15									63	HONPPANAVAR IPTC	0.013	0.074	0.062		
16									100	KMF TRANING CENTER TC	0.030	0.041	0.011		
17									100	HALLAD ONI SPUN POLE TC	0.373	0.481	0.108		
18									100	HUBALLI IP TC	0.159	0.329	0.170		
19									100	RAYAPUR KIDB	0.009	0.072	0.063		
20									100	SUDARSHAN TC	0.221	0.293	0.072		
21									100	RAYAPUR VIILEGE TC	0.475	0.593	0.118		
22									100	JAGDEESH PETROL BUNK TC	0.044	0.095	0.051		
23									100	RAJAJI NAGAR SECTER 1	0.099	0.165	0.067		
24									100	PRAMEELA TC	0.167	0.196	0.029		
25									100	RAJAJI NAGAR TC	0.049	0.090	0.041		
26									100	RAJAJI NAGAR TC	0.091	0.164	0.073		
27									100	RAJAJI NAGAR TC	0.119	0.325	0.206		
28									100	RAJAJI NAGAR TC	0.149	0.297	0.148		
29									100	ISKON TC	0.202	0.293	0.090		
30									100	RESMI ILAKEY TC	0.539	0.630	0.091		
31									100	RAJAJI NAGAR TC	0.031	0.290	0.259		

Sl. No.	Name of Division	Name of PSS	Voltage Level	PRT Capacity in MVA	Name of Outgoing 11 kV Feeder	A	B	C = B-A	Distribution Transformer Capacity in kVA/ Bulk	Distribution Transformer Location/ Code	D	E	F=E-D	C-F	% of 11 kV Loss w.r.t. Input Energy
						Initial meter reading at 11 kV side of PSS (LU)	Final meter reading at 11 kV side of PSS (LU)	Energy consumption at 11 kV outgoing meter at source end during interval in LU			Initial meter reading at LT side of DTR (LU)	Final meter reading at LT side of DTR (LU)	Energy consumption at destination end during interval in LU	11 kV Line loss in LU	
32									100	RAJAJI NAGAR TC	0.095	0.183	0.088		
33									100	TEGINMANI LAYOUT TC	0.006	0.097	0.091		
34									100	BOROKA TC	0.444	0.560	0.117		
35									100	RAJAJI NAGAR TC	0.111	0.171	0.060		
36									100	RAJAJI NAGAR TC 9	0.138	0.209	0.071		
37									100	SECTER NO 2	0.040	0.089	0.049		
38									100	KARIYAMMA NAGAR TC	0.177	0.297	0.120		
39									100	SECTER NO 2	0.105	0.204	0.100		
40									100	SECTER NO 2	0.001	0.085	0.084		
41									100	SECTER NO 2	0.415	0.580	0.165		
42									100	SECTER NO 2	0.059	0.175	0.115		
43									100	SECTER NO 2	0.106	0.174	0.068		
44									100	SECTER NO 2	0.151	0.262	0.111		
45									100	SECTER NO 2	0.024	0.211	0.186		
46									100	SECTER NO 2	0.120	0.291	0.171		
47									100	SECTER NO 2	0.029	0.038	0.009		
48									100	SECTER NO 2	0.001	0.081	0.080		
49									100	SECTER NO 2	0.001	0.051	0.050		
50									100	SECTER NO 2	0.057	0.073	0.015		
51									100	SECTER NO 2	0.001	0.028	0.027		
52									100	SECTER NO 2	0.001	0.028	0.027		
53									100	SECTER NO 2	0.001	0.051	0.050		
54									100	SECTER NO 2	0.007	0.019	0.012		
55									100	SECTER NO 2	0.008	0.021	0.012		
56									100	SECTER NO 2	0.011	0.032	0.021		
57									100	SECTER NO 2	0.003	0.016	0.013		
58									100	SECTER NO 2	0.192	0.255	0.064		
59									100	ANJENAYA NAGAR TC	0.113	0.226	0.113		
60									100	KSRP TC 1	0.003	0.030	0.027		
61									100	KSRP TC 2	0.072	0.162	0.090		
62									100	KSRP TC 3	0.011	0.047	0.036		
63									100	KSRP TC 4	0.053	0.113	0.059		
64									100	ASHARY COLONY TC NO 1	0.077	0.234	0.156		
65									100	ASHARY COLONY TC NO 2	0.022	0.048	0.027		
66									100	ASHARY COLONY TC NO 3	0.017	0.039	0.022		
67									100	ASHARY COLONY TC NO 4	0.002	0.043	0.042		
68									100	LAW COLLEGE TC	0.146	0.185	0.039		
69									200	Diary Quarters	0.353	0.500	0.147		
70									250	Kariyammnager Tc	0.324	0.500	0.175		
71									250	Sanikopp tc	0.522	0.676	0.154		
72										HT 289			0.752		
73										HT 312			0.998		

Sl. No.	Name of Division	Name of PSS	Voltage Level	PRT Capacity in MVA	Name of Outgoing 11 kV Feeder	A	B	C = B-A	Distribution Transformer Capacity in kVA/ Bulk	Distribution Transformer Location/ Code	D	E	F=E-D	C-F	% of 11 kV Loss w.r.t. Input Energy
						Initial meter reading at 11 kV side of PSS (LU)	Final meter reading at 11 kV side of PSS (LU)	Energy consumption at 11 kV outgoing meter at source end during interval in LU			Initial meter reading at LT side of DTR (LU)	Final meter reading at LT side of DTR (LU)	Energy consumption at destination end during interval in LU	11 kV Line loss in LU	
74										HT 263			1.276		
75									250	P&T Quarters	0.116	0.405	0.289		
SUB-TOTAL (7)						**653.443**	**663.0902**	**9.6472**			**7.300**	**13.293**	**9.019**	**0.629**	**6.516**
1	DHARWAD	TADASINAKOPPA	110/11 KV		NAVALUR	738.63	741.987	3.357	25	GADADAVAR IP TC	0.189	0.243	0.054	0.169	5.034
2									25	MAYYANAVAR IP TC	0.074	0.078	0.004		
3									25	MAHESH KATTI IP TC	0.040	0.064	0.024		
4									25	KITTUR IP TC	0.210	0.231	0.021		
5									25	BHEEMREDDI KALLURE TC	0.073	0.090	0.017		
6									25	SHISUVINHALLI IP TC	0.020	0.046	0.026		
7									25	LAKKANAVR IP TC	0.029	0.032	0.002		
8									25	K S PATIL TC	0.088	0.118	0.030		
9									25	BS PATIL TC	0.091	0.112	0.021		
10									25	HEREMATH IP TC	0.008	0.016	0.008		
11									25	HORKERI TC	0.000	0.000	0.000		
12									25	INDUS TOWER TC 1	0.106	0.132	0.026		
13									25	INDUS TOWER TC 2	0.009	0.009	0.000		
14									25	NIMBALKAR IP TC	0.008	0.014	0.006		
15									25	MANGUNDI IP TC	0.000	0.000	0.000		
16									63	BYALYAL TC	0.443	0.578	0.135		
17									63	GUDDAD BASAVANA IP TC	0.955	1.037	0.082		
18									63	BASVESHWAR NAGAR TC	1.141	1.242	0.101		
19									100	HARALPPANAVAR IP TC	1.785	1.885	0.099		
20									100	TADAS IP TC	1.277	1.418	0.141		
21									100	OM NAGAR TC	0.849	0.993	0.144		
22									100	NERALKATTI IP TC	2.710	3.014	0.304		
23									100	HALEEBASAPNAVAR IP TC	1.785	2.045	0.260		
24									100	JAGADALE IP TC	1.427	1.586	0.159		
25									100	M C PATIL IP TC	3.156	3.427	0.271		
26									100	MENSINKAYI TC	2.209	2.346	0.138		
27									100	MULLA IP TC	1.246	1.493	0.247		
28									100	NAVILU TRITHA TC	0.033	0.080	0.046		
29									100	KIRAN ENG TC	1.047	1.308	0.261		
30									100	NAVLUR VIILEGE TC	1.242	1.540	0.298		
31									100	OM NAGAR 2	0.005	0.016	0.011		
32									100	DESHPANDE JEEVAN SHETTY LAYOUT TC	0.007	0.007	0.000		
33									100	BADVANAVAR IP TC	0.493	0.598	0.106		
34									100	DEVARUR TC	0.424	0.537	0.112		
35									100	KIADB TC	0.492	0.525	0.034		
SUB-TOTAL (8)						**738.63**	**741.987**	**3.357**					**3.188**	**0.169**	**5.034**
1	DHARWAD	TADASINAKOPPA	110/11 KV		TADASINKOPPA	262.651	263.578	0.927	25	LOKUR IP TC	0.104	0.120	0.016	0.052	5.622

Sl. No.	Name of Division	Name of PSS	Voltage Level	PRT Capacity in MVA	Name of Outgoing 11 kV Feeder	A	B	C = B-A	Distribution Transformer Capacity in kVA/ Bulk	Distribution Transformer Location/ Code	D	E	F=E-D	C-F	% of 11 kV Loss w.r.t. Input Energy
						Initial meter reading at 11 kV side of PSS (LU)	Final meter reading at 11 kV side of PSS (LU)	Energy consumption at 11 kV outgoing meter at source end during interval in LU			Initial meter reading at LT side of DTR (LU)	Final meter reading at LT side of DTR (LU)	Energy consumption at destination end during interval in LU	11 kV Line loss in LU	
2									25	MAJJIGI IP TC	0.000	0.000	0.127		
3									25	PATIL IP TC BY PASS	1.040	1.136	0.096		
4									25	ITIGATTI CHURCH TC	0.013	0.101	0.088		
5									25	ITIGATTI PLOT TC	0.191	0.216	0.025		
6									25	NAVALGUNDKAR IP TC	0.067	0.089	0.022		
7									25	BENGI IP TC	0.001	0.001	0.000		
8									25	TERDAL IP TC	0.084	0.091	0.007		
9									25	PUJAR IP TC	0.051	0.073	0.022		
10									25	NAVALUR IP TC	0.054	0.090	0.036		
11									25	DESAI IP TC	0.019	0.047	0.028		
12									25	ITIGATTI W/S TC	0.047	0.054	0.007		
13									25	BUSRADDY IP TC	0.010	0.045	0.035		
14									25	DANPPGOUDAR IP TC	0.017	0.032	0.016		
15									25	Joggannaver	0.000	0.058	0.058		
16									63	TADSINKOPPA VILLAGE TC	0.609	0.634	0.025		
17									63	GANGPPNAVER IP TC	0.000	0.000	0.000		
18									63	KULKARNI FARM	0.182	0.190	0.008		
19									63	JOGYALLPUR VILLAGE TC	0.329	0.358	0.028		
20									63	ITIGATTI W/S TC	0.309	0.391	0.082		
21									63	ITIGATTI VILLAGE TC	1.145	1.294	0.149		
SUB-TOTAL (9)						**262.651**	**263.578**	**0.927**			**4.272**	**5.020**	**0.875**	**0.052**	**5.622**
1	DHARWAD	TADASINAKOPPA	110/11 KV		KMP	1060.788	1065.598	4.810	63	STEVAN TC	0.124	0.136	0.013	0.240	4.996
2									63	DEVAS TC 2	0.151	0.177	0.026		
3									63	GARDEN POLYMAR TC	0.077	0.099	0.023		
4									63	USHA HERIMATH TC	0.076	0.078	0.002		
5									100	BB CEMICAL TC	0.258	0.333	0.075		
6									100	KALEKERI SAW MILL	0.554	0.599	0.045		
7									100	NIPPANI TC	0.076	0.183	0.107		
8									100	JANVEKAR TC	2.942	3.152	0.210		
9									100	DEVAS TC 1	0.051	0.070	0.019		
10									100	MANAGUTTI TC	0.117	0.123	0.006		
11									100	MANDIVI ENG TC	0.057	0.080	0.023		
12									250	Agadi Plastic	2.080	2.250	0.170		
13									250	TAMPU	0.962	1.068	0.106		
14									250	Costal Package	1.905	2.063	0.158		
15									250	Hulmani Brothers	1.241	1.389	0.148		
16										HT 119			0.974		

Sl. No.	Name of Division	Name of PSS	Voltage Level	PRT Capacity in MVA	Name of Outgoing 11 kV Feeder	A	B	C = B-A	Distribution Transformer Capacity in kVA/ Bulk	Distribution Transformer Location/ Code	D	E	F=E-D	C-F	% of 11 kV Loss w.r.t. Input Energy
						Initial meter reading at 11 kV side of PSS (LU)	Final meter reading at 11 kV side of PSS (LU)	Energy consumption at 11 kV outgoing meter at source end during interval in LU			Initial meter reading at LT side of DTR (LU)	Final meter reading at LT side of DTR (LU)	Energy consumption at destination end during interval in LU	11 kV Line loss in LU	
17										HT 116			0.669		
18										HT 225			0.547		
19										HT 289			1.145		
20									250	Sangreshkoppa	0.910	1.013	0.103		
SUB-TOTAL (10)						**1060.788**	**1065.598**	**4.810**			**11.580**	**12.815**	**4.570**	**0.240**	**4.996**
1	DHARWAD	KUD	110/11 KV		Jayanagar	683.895	695.539	11.644	25	TATA TOWER BASAVANAGAR	0.000	0.000	0.000	1.018	8.742
2									25	NEHRU NAGAR 112501602	0.522	0.571	0.049		
3									25	TATA INDICOM TOWER 50000026470	0.044	0.067	0.023		
4									25	MANJUNATH HOUSING BOARD SHIVAGERI RELIANCE TOWER	0.147	0.161	0.013		
5									25	CB IP SET	0.012	0.024	0.012		
6									25	AIRCEL TOWER SHIVAGERI	0.120	0.149	0.028		
7									25	RELIANCE TOWER TC	0.000	0.000	0.000		
8									63	YADAVANNA NAVER COMPLEX 50000011836	0.031	0.042	0.011		
9									63	ATMANANDHA LAYOUT-05 11220303062	0.004	0.116	0.112		
10									63	ATMANANDHA LAYOUT-04 11220303091	0.008	0.020	0.011		
11									63	ATMANANDHA LAYOUT-03	0.041	0.043	0.003		
12									63	PANCHAKSHARI KALYANA MANTAPA	0.000	0.002	0.002		
13									63	PHAKEERESWARA COMPLEX	0.022	0.027	0.005		
14									63	R.D KULKARNI 11220303055	0.062	0.072	0.010		
15									63	I.C.S PU COLLEGE	0.088	0.096	0.008		
16									63	TAPOVANANAGAR 11220303080	1.103	1.189	0.086		
17									63	APNA GHAR HOSTEL	0.012	0.020	0.008		
18									63	NEHRU NAGAR 112501068	2.233	2.394	0.161		
19									63	AISHWARAYA PALACE TC-2	0.080	0.093	0.013		
20									63	CHAITRA APPT 11220303010	0.028	0.039	0.011		
21									63	SKS COLONY 11220303076	0.810	0.980	0.170		
22									63	VINAYAKA HALL 11220303014	0.019	0.079	0.059		
23									63	RAMANANDHA APPART 112501085	0.025	0.037	0.012		

Sl. No.	Name of Division	Name of PSS	Voltage Level	PRT Capacity in MVA	Name of Outgoing 11 kV Feeder	A	B	C = B-A	Distribution Transformer Capacity in kVA/ Bulk	Distribution Transformer Location/ Code	D	E	F=E-D	C-F	% of 11 kV Loss w.r.t. Input Energy
						Initial meter reading at 11 kV side of PSS (LU)	Final meter reading at 11 kV side of PSS (LU)	Energy consumption at 11 kV outgoing meter at source end during interval in LU			Initial meter reading at LT side of DTR (LU)	Final meter reading at LT side of DTR (LU)	Energy consumption at destination end during interval in LU	11 kV Line loss in LU	
24									63	AMITHA APPART 50000011315	0.085	0.103	0.018		
25									63	KAVERI LADIES HOSTEL 50000009577	0.088	0.294	0.206		
26									63	SHIVAGIRI SECOND SPUN POLE 11220303069	1.500	1.611	0.111		
27									63	BOOMIKA COLONY 50000010941	0.044	0.049	0.005		
28									63	MANJUNATH COLONY 11220303036	2.768	2.968	0.199		
29									63	SAI BASVA NAGAR 11220303039	0.139	0.148	0.009		
30									63	SAIBASAVA NAGAR (MUKASHI NAGAR)	0.051	0.158	0.107		
31									63	S.K.S COLONY 11220303077	0.066	0.108	0.042		
32									63	MAHANTHA NAGAR TC NO.3 11220303038	1.083	1.168	0.085		
33									63	BOLAR TC 11220303095	0.190	0.219	0.029		
34									63	JOSHI LAYOUT TC -2 1125501079	0.000	0.000	0.000		
35									63	JOSHI LAYOUT TC -2 11220303048	0.019	0.129	0.110		
36									63	RATHNA GANGA APPT. 11220303087	0.013	0.020	0.007		
37									100	BCM HOSTEL 112501032	0.045	0.104	0.059		
38									100	GOUDER COLONY -2 112601045	1.692	1.825	0.133		
39									100	VIJAYANAGAR TC 112601107	1.170	1.257	0.087		
40									100	KIADB LAYOUT 3 rd TC 112601053	0.130	0.144	0.015		
41									100	KIADB LAYOUT 4 th TC 112601054	0.155	0.166	0.012		
42									100	KIADB LAYOUT- 01 11220303025	0.548	0.599	0.052		
43									100	KIADB LAYOUT- 02 11220303026	0.272	0.296	0.023		
44									100	THAPOVANA MATTA 11220303079	0.645	0.702	0.057		
45									100	ATMANANDHA LAYOUT-01	0.003	0.001	-0.002		
46									100	STAR LINE 11220303003	1.245	1.376	0.131		
47									100	ATMANANDHA LAYOUT-02	0.001	0.002	0.002		

Sl. No.	Name of Division	Name of PSS	Voltage Level	PRT Capacity in MVA	Name of Outgoing 11 kV Feeder	A	B	C = B-A	Distribution Transformer Capacity in kVA/ Bulk	Distribution Transformer Location/ Code	D	E	F=E-D	C-F	% of 11 kV Loss w.r.t. Input Energy
						Initial meter reading at 11 kV side of PSS (LU)	Final meter reading at 11 kV side of PSS (LU)	Energy consumption at 11 kV outgoing meter at source end during interval in LU			Initial meter reading at LT side of DTR (LU)	Final meter reading at LT side of DTR (LU)	Energy consumption at destination end during interval in LU	11 kV Line loss in LU	
48									100	VINAY KULKARNI LAYOUT 112601144	0.251	0.279	0.028		
49									100	SINDHOOR 112601101	3.078	3.420	0.342		
50									100	NEHARUNAGAR MASID TC 11220303043	1.816	1.959	0.143		
51									100	MASURU TC 11220303071	2.717	2.921	0.204		
52									100	GANAPATHI GUDDI (SRI NAGAR) 112601043	0.324	0.449	0.125		
53									100	R.K.NAGAR 11220303056	2.947	3.167	0.220		
54									100	UCB STAGE -2 112601120	0.212	0.232	0.020		
55									100	AISHWARAYA PALACE TC-4	0.009	0.022	0.013		
56									100	BHAVIKATTE PLOT 11220303007	2.427	2.609	0.182		
57									100	ANNAPURNA APPT. 11220303002	0.283	0.309	0.027		
58									100	UCB SECOND	0.028	0.045	0.017		
59									100	AISHWARAYA PALACE TC-1	0.000	0.005	0.005		
60									100	AISHWARAYA PALACE TC-3	0.058	0.097	0.039		
61									100	UCB NAGAR 11220303083	1.279	1.490	0.211		
62									100	SIDDA RUDHA COLONY 112601146	0.263	0.445	0.182		
63									100	JALADHARSHINI COLONY 11220305002	1.672	1.733	0.061		
64									100	UCB STAGE -2 112601082	0.148	0.327	0.179		
65									100	UCB STAGE -2 112601121	0.049	0.056	0.007		
66									100	SHANKAN GOUDER 11220303066	0.728	0.870	0.142		
67									100	PAVAN NAGARI 11220303050	1.480	1.587	0.107		
68									100	GANESH BAZAR 112601327	2.207	2.414	0.206		
69									100	C.I.T.B 50000011043	3.023	3.204	0.182		
70									100	MURUGODU 112601066	3.776	4.055	0.280		
71									100	DURGA COLONY 50000010695	3.379	3.623	0.245		
72									100	JAYANAGAR NEAR MASEEDI ABB TC 112601050	0.161	0.232	0.071		
73									100	SAMEER BUILDING 11220303064	0.340	0.404	0.063		
74									100	BADIGERI TC 50000026607	3.959	4.191	0.232		

Sl. No.	Name of Division	Name of PSS	Voltage Level	PRT Capacity in MVA	Name of Outgoing 11 kV Feeder	A	B	C = B-A	Distribution Transformer Capacity in kVA/ Bulk	Distribution Transformer Location/ Code	D	E	F=E-D	C-F	% of 11 kV Loss w.r.t. Input Energy
						Initial meter reading at 11 kV side of PSS (LU)	Final meter reading at 11 kV side of PSS (LU)	Energy consumption at 11 kV outgoing meter at source end during interval in LU			Initial meter reading at LT side of DTR (LU)	Final meter reading at LT side of DTR (LU)	Energy consumption at destination end during interval in LU	11 kV Line loss in LU	
75									100	GOUNKAR PLOT 112201046	2.007	2.156	0.149		
76									100	MICHIGIN COMPOUND	0.536	0.779	0.242		
77									100	SHIVAGIRI GANAPATHI GUDI 11220303090	0.000	0.000	0.000		
78									100	VISWA BHARATHI COLONY 50000011432	1.085	1.186	0.101		
79									100	VINAYAKA LAYOUT 11220303085	0.090	0.103	0.013		
80									100	RAMAKRISHNA ASHRAMA (C.B NAGAR) 112601086	0.058	0.062	0.004		
81									100	MANJUNATH HOUSING BOARD SHIVAGERI TC	1.764	1.875	0.110		
82									100	MANJUNATH HOUSING BOARD SHIVAGERI TC-2	0.135	0.148	0.014		
83									100	SIDDHA RODHA COLONY 50000010932	0.369	0.401	0.031		
84									100	SAI RESIDENCY SPUN POLE 11220303065	0.424	0.489	0.065		
85									100	(RC NAGAR) NIRMAL NAGAR TC NO. 2 11220303045	0.054	0.084	0.030		
86									100	(RC NAGAR) NIRMAL NAGAR TC NO. 3 11220303046	0.289	0.314	0.025		
87									100	ADISHAKTI COLONY 11220303035	0.519	0.567	0.048		
88									100	ASHOK APPARTMENT 112601108	0.459	0.495	0.036		
89									100	(RC NAGAR) NIRMAL NAGAR TC.NO. 1 11220303044	0.279	0.301	0.022		
90									100	REVENU LAYOUT 11220305004	0.243	0.344	0.100		
91									100	KRUSHI NAGAR 11220303030	0.379	0.406	0.027		
92									100	MAHANTHA NAGAR TC NO.4 50000026497	0.572	0.654	0.082		
93									100	VINAYAK NAGAR TC 112600112	0.450	0.567	0.117		
94									100	SRIPAADHAA NAGAR TC 112601104	0.518	0.644	0.126		
95									100	SAI NAGAR -2 (TEMPLE) 11220303063	0.620	0.666	0.046		
96									100	SAI NAGAR -1 11220303062	0.705	0.758	0.053		

Sl. No.	Name of Division	Name of PSS	Voltage Level	PRT Capacity in MVA	Name of Outgoing 11 kV Feeder	A	B	C = B-A	Distribution Transformer Capacity in kVA/ Bulk	Distribution Transformer Location/ Code	D	E	F=E-D	C-F	% of 11 kV Loss w.r.t. Input Energy
						Initial meter reading at 11 kV side of PSS (LU)	Final meter reading at 11 kV side of PSS (LU)	Energy consumption at 11 kV outgoing meter at source end during interval in LU			Initial meter reading at LT side of DTR (LU)	Final meter reading at LT side of DTR (LU)	Energy consumption at destination end during interval in LU	11 kV Line loss in LU	
97									100	KRUSHI NAGAR 112601057	1.055	1.156	0.101		
98									100	PRATHIBA COLONY 11220303053	0.063	0.099	0.036		
99									100	SILVER ARCHADE 1122030307	2.381	2.551	0.170		
100									100	CHAITHANIYA NAGAR 112601037	0.683	0.797	0.114		
101									100	SIDDARAMESHWARA NAGAR 112601099	0.366	0.439	0.072		
102									100	RC NAGAR 11220303054	0.425	0.478	0.053		
103									100	RANICHANNAMA 11220303058	1.508	1.644	0.136		
104									100	DWARA WATIKA	0.076	0.186	0.109		
105									100	BASAVA NAGAR TC 11220303005	1.356	1.701	0.345		
106									100	SRINAGAR BUS STOP	0.157	0.377	0.221		
107									250	Pyatimath 250 KVA TC	3.036	3.343	0.307		
108									250	CB Nagar Badiger TC	1.840	2.130	0.290		
109									250	B.D.Hiremath TC	1.033	1.236	0.203		
110									250	Shivagiri Ichangi TC	2.923	3.233	0.311		
111									250	KIADB	0.354	0.564	0.210		
112									250	Chaitanya Nagar	1.115	1.347	0.232		
113									250	Vijayanad Nagar TC	1.772	1.989	0.217		
114									250	Rani ChannammaNagar	1.194	1.413	0.219		
SUB-TOTAL (11)						**683.895**	**695.539**	**11.644**			**86.866**	**97.492**	**10.626**	**1.018**	**8.742**
1	DHARWAD	KUD	110/11 KV		Sadhanakeri	192.104	196.418	4.314	25	RELIANCE TOWER KELAGERI	0.114	0.129	0.014	0.321	7.436
2									25	GUDDADAMATA	0.020	0.032	0.012		
3									25	INDUS TOWER	0.345	0.370	0.025		
4									25	RELIANCE TOWER	0.114	0.143	0.029		
5									25	SHIRADI SAI BABA COLONY	0.554	0.607	0.053		
6									63	RENUKA APARTMENT	0.116	0.197	0.081		
7									63	SADHANKERI BEKARI	1.391	1.499	0.108		
8									63	ASHOK NAGAR-3	0.057	0.125	0.069		
9									63	PAVAN PARK-2	0.062	0.152	0.090		
10									63	LOTUS LAYOUT-1	0.180	0.238	0.058		
11									100	HARICHANDRA	0.073	0.190	0.117		
12									100	ADITHYA PARK-1	0.053	0.150	0.097		
13									100	ADITHYYA PARK-2	0.121	0.254	0.133		
14									100	STEVE ABRAHAM LAYOUT	0.196	0.212	0.016		
15									100	ADITHYA PARK-3	0.662	0.706	0.044		

Sl. No.	Name of Division	Name of PSS	Voltage Level	PRT Capacity in MVA	Name of Outgoing 11 kV Feeder	A	B	C = B-A	Distribution Transformer Capacity in kVA/ Bulk	Distribution Transformer Location/ Code	D	E	F=E-D	C-F	% of 11 kV Loss w.r.t. Input Energy
						Initial meter reading at 11 kV side of PSS (LU)	Final meter reading at 11 kV side of PSS (LU)	Energy consumption at 11 kV outgoing meter at source end during interval in LU			Initial meter reading at LT side of DTR (LU)	Final meter reading at LT side of DTR (LU)	Energy consumption at destination end during interval in LU	11 kV Line loss in LU	
16									100	JADHAV LAYOUT-1	1.289	1.386	0.097		
17									100	JADHAV LAYOUT-3	0.936	1.008	0.072		
18									100	JADHAV LAYOUT-2	2.290	2.376	0.086		
19									100	SHANTHINIKETHAN	1.762	1.893	0.132		
20									100	SAMPIGE NAGAR	0.750	0.791	0.041		
21									100	KHB-28	0.035	0.057	0.022		
22									100	KELAGERI VILLAGE	3.022	3.263	0.241		
23									100	HARIJAN KERI	0.918	1.010	0.092		
24									100	National Highway TC	1.686	1.802	0.116		
25									100	SHIVA SHAKTHI NAGAR	2.951	3.196	0.245		
26									100	AAJANEYANAGAR	3.045	3.274	0.229		
27									100	BENDRE BHAVANA	3.940	4.231	0.291		
28									100	HUDCO COLONY	0.757	1.057	0.300		
29									100	KUSUMA NAGAR	2.923	3.159	0.236		
30									100	B C PARK-1	0.107	0.287	0.180		
31									100	B C-2	0.103	0.114	0.011		
32									100	UDAYA NAGAR	0.973	1.047	0.074		
33									100	VIJAY NAGAR	0.780	0.841	0.061		
34									100	ASHOK NAGAR-1	0.213	0.224	0.011		
35									100	ASHOK NAGAR-2	0.001	0.001	0.000		
36									100	SARAD ENCLEVE	0.001	0.021	0.020		
37									100	PAVAN PARK-1	0.303	0.348	0.045		
38									100	PAVAN PARK-3	0.000	0.000	0.000		
39									100	LOTUS LAYOUT-2	0.244	0.291	0.047		
40									100	BANSHANKARI NAGAR	1.862	2.010	0.149		
41									100	Sarovar Nagar TC-1	0.535	0.584	0.050		
42									250	SANTHOSH NAGAR	1.645	1.846	0.201		
SUB-TOTAL (12)						**192.104**	**196.418**	**4.314**			**37.130**	**41.123**	**3.993**	**0.321**	**7.436**
1	DHARWAD	MRUTHYUNJAY	110/11 KV		Kalabhavan	320.682	324.761	4.079	25	ANAD GADDE(Koti Apt)	0.089	0.100	0.012	0.319	7.818
2									25	KALAL	0.057	0.072	0.016		
3									63	C B T (H D M C COMPLEX)	0.277	0.298	0.021		
4									63	CIVIL Hospital	0.307	0.329	0.022		
5									63	MARUTHI GUDI(Tower TC Mobile)	0.222	0.304	0.082		
6									63	KITTAL COLLEGE(Centurion Bank)	0.001	0.015	0.014		
7									100	GEETHA MEDICAL	5.790	6.075	0.286		
8									100	ANJUMAN COMPLEX	2.244	2.403	0.159		
9									100	CHANDRAVADANA PLAZA	0.123	0.231	0.108		
10									100	PUNJI COMPLEX	0.883	0.944	0.060		
11									100	VISHALI	0.764	0.815	0.051		
12									100	JAYADEVI THAYI SCHOOL	3.706	3.967	0.261		

Sl. No.	Name of Division	Name of PSS	Voltage Level	PRT Capacity in MVA	Name of Outgoing 11 kV Feeder	A	B	C = B-A	Distribution Transformer Capacity in kVA/ Bulk	Distribution Transformer Location/ Code	D	E	F=E-D	C-F	% of 11 kV Loss w.r.t. Input Energy
						Initial meter reading at 11 kV side of PSS (LU)	Final meter reading at 11 kV side of PSS (LU)	Energy consumption at 11 kV outgoing meter at source end during interval in LU			Initial meter reading at LT side of DTR (LU)	Final meter reading at LT side of DTR (LU)	Energy consumption at destination end during interval in LU	11 kV Line loss in LU	
13									100	KILLA GATE	1.823	1.946	0.123		
14									100	Marata Mandal	0.536	0.573	0.037		
15									100	CANARA BANK	0.000	0.000	0.000		
16									100	Shanthi Colony I CROSS 1	0.235	0.249	0.014		
17									100	Shanthi ColonyI CROSS 2	0.005	0.029	0.024		
18									100	Shanthi Colony I CROSS 3	0.270	0.299	0.029		
19									100	RENUKA SAW MILL	2.792	2.995	0.203		
20									100	Vanita Seva Samaj	3.666	3.923	0.257		
21									100	MARUTHI COMPLEX	0.885	0.947	0.062		
22									100	PATEDIYA COMPLEX	0.000	0.000	0.000		
23									100	GOPINATH APPTMENT	0.691	0.743	0.052		
24									100	APASARA BAR	0.322	0.341	0.020		
25									100	GANDHARVA BAR	2.678	2.895	0.218		
26									100	JUBLIE CIRCLE	1.297	1.403	0.106		
27									100	VIDYAVARDAKA SANGA	0.568	0.623	0.055		
28									100	L E A CANTEEN	1.372	1.470	0.098		
29									100	DISTRICT COURT(HT) Bulk	0.002	0.138	0.135		
30									100	NMR Scan Centre (HT) Bulk	0.006	0.254	0.248		
31									100	JANATHA BAZAR	1.847	2.025	0.179		
32									100	LIBRARY	0.793	0.842	0.050		
33									250	VIJAYA	1.246	1.485	0.239		
34									250	KAMALAPURA	1.871	2.393	0.522		
SUB-TOTAL (13)						**320.682**	**324.761**	**4.079**			**37.366**	**41.126**	**3.760**	**0.319**	**7.818**
1	DHARWAD	USA DHARWAD	33/11 KV	10 MVA	11 kV KHB Feeder -	245.081	253.202	8.121	25	CHANNABASA COLONY	0.107	0.119	0.012	0.558	6.874
2									25	Saidapur pond TC	0.289	0.341	0.052		
3									25	KUMBAPUR FARM			0.065		
4									25	TDK WATER SUPPLY TC	0.076	0.198	0.122		
5									25	KHB TC	1.234	1.365	0.131		
6									25	KHB TC REVANKAR IP	0.008	0.012	0.004		
7									25	KHB TC TILSAR IP	0.084	0.121	0.037		
8									25	KHB TC BHAT IP[	0.313	0.352	0.039		
9									63	ADI CHUNCHANAGIRI-TC	0.846	0.972	0.126		
10									63	BARCHI WALE LAYOUT-2	0.000	0.000	0.000		
11									63	CANARA BANK N,NPUR	1.356	1.517	0.161		
12									63	CITB-6	0.020	0.134	0.115		
13									63	DOORDARSHAN QUARTERS	0.095	0.108	0.013		
14									63	GURUDEVA APARTMENT	0.126	0.134	0.008		
15									63	GERMAN HOSPITAL	0.150	0.155	0.005		
16									63	JOSHI HOSPITAL	0.069	0.077	0.009		
17									63	KABADI LAYOUT 2	0.092	0.105	0.013		
18									63	Saidapur farm TC	0.630	0.636	0.006		

Sl. No.	Name of Division	Name of PSS	Voltage Level	PRT Capacity in MVA	Name of Outgoing 11 kV Feeder	A	B	C = B-A	Distribution Transformer Capacity in kVA/ Bulk	Distribution Transformer Location/ Code	D	E	F=E-D	C-F	% of 11 kV Loss w.r.t. Input Energy
						Initial meter reading at 11 kV side of PSS (LU)	Final meter reading at 11 kV side of PSS (LU)	Energy consumption at 11 kV outgoing meter at source end during interval in LU			Initial meter reading at LT side of DTR (LU)	Final meter reading at LT side of DTR (LU)	Energy consumption at destination end during interval in LU	11 kV Line loss in LU	
19									63	PATEL LAYOUT	0.028	0.033	0.005		
20									63	RAKSHA COLONY - 1	0.036	0.042	0.006		
21									63	SAMPIGE NAGAR-3	0.610	0.233	-0.378		
22									63	SHERYA HOSPITAL	0.240	0.256	0.016		
23									63	SWASTI APARTMENT	0.110	0.129	0.019		
24									63	VANAM APARTMENT	0.079	0.079	0.000		
25									63	SECTER NO 16	IDEL	IDEL	0.000		
26									63	KHB TC	0.492	0.525	0.033		
27									63	KHB TC	IDEL	IDEL	0.000		
28									63	KHB TC MORE FRAM HOUSE	0.016	0.032	0.016		
29									63	KHB TC UPPIN IP	0.359	0.495	0.136		
30									100	ADHARSHA NAGAR	0.165	0.801	0.636		
31									100	AIR QUATRAS	0.266	0.327	0.061		
32									100	BARCHI WALE LAYOUT-1	0.090	0.100	0.009		
33									100	C I T B-8	0.143	0.192	0.049		
34									100	CITB 1	0.119	0.145	0.025		
35									100	CITB 2	0.000	0.000	0.000		
36									100	CITB TC 12	0.018	0.087	0.069		
37									100	CITB TC11	0.168	0.198	0.030		
38									100	CITB-10	0.093	0.157	0.064		
39									100	CITB-13	0.051	0.112	0.060		
40									100	CITB-14	0.279	0.310	0.030		
41									100	CITB-3	0.000	0.023	0.023		
42									100	CITB-4	0.030	0.038	0.008		
43									100	CITB-5	0.000	0.000	0.000		
44									100	CITB-7	0.054	0.078	0.024		
45									100	CITB-9	0.119	0.135	0.016		
46									100	DESAI APARTMENT	0.144	0.160	0.016		
47									100	GOVT PRESS	2.127	2.459	0.333		
48									100	HALIYAL TOLL NAKA	1.594	1.721	0.127		
49									100	HAWALDAR TC	1.437	1.542	0.105		
50									100	HDUDA 1	0.052	0.093	0.041		
51									100	HDUDA 10	0.117	0.152	0.035		
52									100	HDUDA 11	0.001	0.001	0.000		
53									100	HDUDA 12	0.011	0.019	0.008		
54									100	HDUDA 2	0.114	0.125	0.011		
55									100	HDUDA 3	0.120	0.120	0.000		
56									100	HDUDA 4	0.068	0.072	0.005		
57									100	HDUDA 5	0.065	0.074	0.009		
58									100	HDUDA 6	0.104	0.146	0.042		
59									100	HDUDA 7	0.083	0.104	0.021		
60									100	HDUDA 8	0.001	0.001	0.000		

Sl. No.	Name of Division	Name of PSS	Voltage Level	PRT Capacity in MVA	Name of Outgoing 11 kV Feeder	A	B	C = B-A	Distribution Transformer Capacity in kVA/ Bulk	Distribution Transformer Location/ Code	D	E	F=E-D	C-F	% of 11 kV Loss w.r.t. Input Energy
						Initial meter reading at 11 kV side of PSS (LU)	Final meter reading at 11 kV side of PSS (LU)	Energy consumption at 11 kV outgoing meter at source end during interval in LU			Initial meter reading at LT side of DTR (LU)	Final meter reading at LT side of DTR (LU)	Energy consumption at destination end during interval in LU	11 kV Line loss in LU	
61									100	HDUDA 9	0.216	0.243	0.027		
62									100	I G F R I	0.131	0.176	0.046		
63									100	K.H.B-16	0.079	0.085	0.006		
64									100	KABADI LAYOUT 3	0.069	0.074	0.005		
65									100	KABBADI LAYOUT-1	0.222	0.261	0.039		
66									100	KADAM LAYOUT	0.005	0.005	0.000		
67									100	KARMARKAR LAYOUT	1.226	1.337	0.112		
68									100	KHB-4	0.100	0.163	0.063		
69									100	KHB 1	0.136	0.141	0.005		
70									100	KHB 10	0.062	0.074	0.012		
71									100	KHB 11	0.114	0.126	0.012		
72									100	KHB 12	0.003	0.003	0.000		
73									100	KHB 15	0.000	0.000	0.000		
74									100	KHB 19	0.078	0.085	0.007		
75									100	KHB 2	0.148	0.167	0.019		
76									100	KHB 21	0.059	0.064	0.005		
77									100	KHB 23	0.015	0.017	0.002		
78									100	KHB 24	0.195	0.214	0.019		
79									100	KHB 25	0.061	0.067	0.006		
80									100	KHB 27	0.047	0.054	0.007		
81									100	KHB 3	0.131	0.144	0.012		
82									100	KHB 5	0.096	0.112	0.015		
83									100	KHB 6	0.001	0.006	0.005		
84									100	KHB 7	0.215	0.233	0.019		
85									100	KHB 8	0.216	0.232	0.016		
86									100	KHB 9	0.088	0.106	0.018		
87									100	KHB COLONY 13	0.001	0.001	0.000		
88									100	KHB COLONY 14	0.000	0.000	0.000		
89									100	KHB COLONY 18	0.056	0.058	0.002		
90									100	KHB COLONY 22	0.053	0.056	0.003		
91									100	KHB COLONY(TC17)	0.078	0.088	0.010		
92									100	KHB-20	0.176	0.206	0.031		
93									100	KHB-26	0.124	0.134	0.010		
94									100	LIC QUARTERS NEW	2.831	2.966	0.135		
95									100	LIC QUATRAS OLD	0.666	0.717	0.051		
96									100	MOHISI TC	0.555	0.690	0.135		
97									100	MUDHOLKR COMPOUND	2.106	2.317	0.211		
98									100	NANAVATHI	1.152	1.319	0.167		
99									100	NAWAB PLOT-1	2.101	2.290	0.189		
100									100	NAWAB PLOT-2	2.658	2.882	0.223		
101									100	NRUPATUNGA GUEST HOUSE	0.213	0.292	0.079		

Sl. No.	Name of Division	Name of PSS	Voltage Level	PRT Capacity in MVA	Name of Outgoing 11 kV Feeder	A	B	C = B-A	Distribution Transformer Capacity in kVA/ Bulk	Distribution Transformer Location/ Code	D	E	F=E-D	C-F	% of 11 kV Loss w.r.t. Input Energy
						Initial meter reading at 11 kV side of PSS (LU)	Final meter reading at 11 kV side of PSS (LU)	Energy consumption at 11 kV outgoing meter at source end during interval in LU			Initial meter reading at LT side of DTR (LU)	Final meter reading at LT side of DTR (LU)	Energy consumption at destination end during interval in LU	11 kV Line loss in LU	
102									100	P H Q-2	0.596	1.534	0.937		
103									100	PHADAKI TC	0.090	0.105	0.015		
104									100	POLICE HEAD QUARTERS-1	1.886	2.024	0.137		
105									100	RAJANI APARTMENT	0.147	0.158	0.010		
106									100	RAKSHA COLONY - 2	0.435	0.468	0.033		
107									100	RAKSHA COLONY - 3	0.161	0.187	0.026		
108									100	RATTAN 10	0.001	0.001	0.000		
109									100	RATTAN LAYOUT 1	0.010	0.011	0.001		
110									100	RATTAN LAYOUT 2	0.011	0.013	0.002		
111									100	RATTAN LAYOUT 3	0.023	0.027	0.004		
112									100	RATTAN LAYOUT 4	0.001	0.001	0.000		
113									100	RATTAN LAYOUT 5	0.001	0.001	0.000		
114									100	RATTAN LAYOUT 6	0.007	0.007	0.000		
115									100	RATTAN LAYOUT 7	0.000	0.000	0.000		
116									100	RATTAN LAYOUT 8	0.005	0.006	0.001		
117									100	RATTAN LAYOUT 9	0.000	0.000	0.000		
118									100	S B I COLONY	0.073	0.681	0.607		
119									100	SANMATHI NAGAR 1	1.790	2.082	0.292		
120									100	SANMATHI NAGAR 2	2.896	3.136	0.240		
121									100	SAROVARA NAGAR 3	0.012	0.013	0.001		
122									100	SAROVARA NAGARA 4	0.000	0.000	0.000		
123									100	SEVALAYA	0.175	0.219	0.044		
124									100	SHAIKH COMPOUND	2.540	2.850	0.310		
125									100	YERRI APARTMENT	0.160	0.182	0.023		
126									100	Anita patil layout-1	0.000	0.000	0.000		
127									100	Anita patil layout-2	0.000	0.000	0.000		
128									100	Hadli layoue-1	0.000	0.000	0.000		
129									100	Hadli layoue-2	0.000	0.000	0.000		
130									100	B.D.Patil layout-1	0.016	0.018	0.002		
131									100	B.D.Patil layout-2	0.027	0.030	0.003		
132									100	B.D.Patil layout-3	0.003	0.004	0.001		
133									100	B.D.Patil layout-4	0.001	0.001	0.000		
134									100	Jadhav Layout-1	0.000	0.000	0.000		
135									100	Jadhav Layout-2	0.000	0.000	0.000		
136									100	Captain Desai park	0.046	0.049	0.003		
137									100	kalawad layout-1	0.001	0.001	0.000		
138									100	kalawad layout-2	0.000	0.000	0.000		
139									100	kalawad layout-3	0.001	0.001	0.000		
140									100	steve abrahim Appartment			0.000		
141									100	B G Patil Complex TC (Halyalnaka)			0.000		
142									100	GELABASI TC	0.796	0.887	0.091		

Sl. No.	Name of Division	Name of PSS	Voltage Level	PRT Capacity in MVA	Name of Outgoing 11 kV Feeder	A	B	C = B-A	Distribution Transformer Capacity in kVA/ Bulk	Distribution Transformer Location/ Code	D	E	F=E-D	C-F	% of 11 kV Loss w.r.t. Input Energy
						Initial meter reading at 11 kV side of PSS (LU)	Final meter reading at 11 kV side of PSS (LU)	Energy consumption at 11 kV outgoing meter at source end during interval in LU			Initial meter reading at LT side of DTR (LU)	Final meter reading at LT side of DTR (LU)	Energy consumption at destination end during interval in LU	11 kV Line loss in LU	
143									100	SECTER NO 14	0.205	0.221	0.015		
144									100	KHAN IP TC	0.016	0.017	0.001		
145									100	LOKUR FLOR MILL TC	0.032	0.054	0.022		
192									250	JAMAKHANDI MATH LAYOUT	0.764	0.848	0.084		
193									250	NARAYANAPUR LAXMI TEMPLE	1.852	2.044	0.193		
194									250	SAMPIGE NAGAR-2	0.658	0.745	0.087		
195									250	SAROVOR NAGAR 2ND	0.182	0.204	0.023		
196									250	Shakambari Appartment TC-1	0.003	0.003	0.000		
197									250	Shakambari Appartment TC-2	0.004	0.004	0.000		
SUB-TOTAL (14)						**245.081**	**253.202**	**8.121**			**47.210**	**54.708**	**7.563**	**0.558**	**6.874**
1	DHARWAD	LAKAMANAHALLI	110/11 KV		Madarmaddi	1135.230	1145.190	9.960	25	RAM NAGAR TOWER TC	0.159	0.169	0.010	0.586	5.885
2									25	LADVA GTL TOWER TC	0.685	0.943	0.258		
3									63	POLICE QUARTERS 1(PSI)	0.373	0.411	0.038		
4									63	(Dodwad Oil) NEHARU MARKET	0.759	0.812	0.053		
5									63	VAYUPUTHRA COMPLEX	0.222	0.239	0.017		
6									63	MANGALA COMPLEX	0.179	0.181	0.003		
7									63	PADAMA COMPLEX	0.096	0.109	0.013		
8									63	RAMDEV GUDI	1.314	1.416	0.102		
9									63	DIKSHITH WADA 2	1.305	1.343	0.038		
10									100	Gavali galli Tikare Road (MURTHI)	2.168	2.331	0.163		
11									100	POLICE STATION	0.999	1.246	0.247		
12									100	POLICE QUARTERS OLD SI	1.055	1.290	0.235		
13									100	POLICE QUARTERS BLOCK-A&B	0.407	0.932	0.524		
14									100	POLICE QUARTERS BLOCK-C&D	0.302	0.325	0.023		
15									100	Dharwad PLAZA	2.763	2.954	0.191		
16									100	OLD BUSTAND(HT)	0.000	0.000	0.000		
17									100	Kempa Geri (Kishore) (SHANKAR PURA 1)	2.448	2.834	0.386		
18									100	OLD POST OFFICE	1.159	1.269	0.110		
19									100	PASTE SWEETS MART	1.318	1.417	0.099		
20									100	JAKANI BAVI	0.001	0.142	0.141		
21									100	Lakshmeshwar complex	0.449	0.482	0.033		
22									100	KAIPALLE MARKET (DBN)	3.909	4.384	0.475		
23									100	SARASWATHI RESTORENT	1.426	1.527	0.102		
24									100	SITARA BAR (Regal Circle)	2.187	2.353	0.166		

Sl. No.	Name of Division	Name of PSS	Voltage Level	PRT Capacity in MVA	Name of Outgoing 11 kV Feeder	A	B	C = B-A	Distribution Transformer Capacity in kVA/ Bulk	Distribution Transformer Location/ Code	D	E	F=E-D	C-F	% of 11 kV Loss w.r.t. Input Energy
						Initial meter reading at 11 kV side of PSS (LU)	Final meter reading at 11 kV side of PSS (LU)	Energy consumption at 11 kV outgoing meter at source end during interval in LU			Initial meter reading at LT side of DTR (LU)	Final meter reading at LT side of DTR (LU)	Energy consumption at destination end during interval in LU	11 kV Line loss in LU	
25									100	KONDWAD ONI (TELASAR COMPLEX)	1.507	1.615	0.108		
26									100	City Complex (kittur) HT	0.006	0.287	0.281		
27									100	Killedhar Complex	1.345	1.513	0.168		
28									100	BHARATH HIGH SCHOOL	0.947	1.024	0.077		
29									100	JANNATH NAGAR	4.318	4.646	0.327		
30									100	JADAJI BHAVI HOSA YELLAPURA	3.673	3.934	0.262		
31									100	DUNDI VONI	3.947	4.221	0.274		
32									100	JAI CAFE	1.825	1.976	0.151		
33									100	CHAPPAR BANDH COLONY	3.074	3.296	0.223		
34									100	RAM NAGAR	1.856	2.008	0.152		
35									100	Sriranga Arcade (Puranik) (HT)	0.001	0.380	0.379		
36									100	D.S.Patil (SBI)(HT)	0.000	0.000	0.000		
37									100	RAVANKAPUR MASJID	3.303	3.548	0.245		
38									100	NTTF	1.042	1.152	0.110		
39									100	VENKATESHWARA COMPLEX	0.103	0.116	0.014		
40									100	PEARL BAR	1.422	1.536	0.114		
41									100	KURUBARA VONI	4.154	4.481	0.327		
42									100	MALAGI COMPLEX	1.116	1.251	0.135		
43									100	SOUDHAGAR CHALA	3.772	4.078	0.306		
44									100	DIKSHITH WADA 1(Line Bazar Main)	1.259	1.446	0.187		
45									250	MEGADARSHINI	2.410	2.715	0.306		
46									250	MAHISHI	3.984	4.377	0.393		
47									250	THENGINA KAI	2.866	3.188	0.322		
48									250	KATTI MANI	4.570	5.115	0.546		
49									250	BHUSAPPA CHOUKA	2.361	2.906	0.545		
SUB-TOTAL (15)						**1135.230**	**1145.190**	**9.960**			**80.542**	**89.916**	**9.374**	**0.586**	**5.885**
1	DHARWAD	LAKAMANAHALLI	110/11 KV		(Vidyaranya) JSS	920.664	930.19	9.526	25	Shaik sanadi IP	0.099	0.114	0.015	0.686	7.199
2									25	Charanthimath IP	0.090	0.111	0.021		
3									25	Stainers Colony	0.065	0.075	0.010		
4									25	Durgamana Gudi	0.180	0.182	0.002		
5									25	Hebballi Form IP	0.000	0.000	0.000		
6									25	BSNL Tower TC	0.071	0.177	0.106		
7									25	Neeralikatti IP	0.108	0.139	0.032		
8									25	MALLIGAWAD	0.067	0.198	0.131		
9									63	Manakilla (Patt)	0.568	0.984	0.416		
10									63	Boosgalli	2.324	2.804	0.480		
11									63	Lakamanahalli oni	1.856	1.986	0.130		
12									63	Manakilla(Narayankar)	1.793	1.910	0.118		

Sl. No.	Name of Division	Name of PSS	Voltage Level	PRT Capacity in MVA	Name of Outgoing 11 kV Feeder	A	B	C = B-A	Distribution Transformer Capacity in kVA/ Bulk	Distribution Transformer Location/ Code	D	E	F=E-D	C-F	% of 11 kV Loss w.r.t. Input Energy
						Initial meter reading at 11 kV side of PSS (LU)	Final meter reading at 11 kV side of PSS (LU)	Energy consumption at 11 kV outgoing meter at source end during interval in LU			Initial meter reading at LT side of DTR (LU)	Final meter reading at LT side of DTR (LU)	Energy consumption at destination end during interval in LU	11 kV Line loss in LU	
13									63	Hebballi Agasi	0.517	0.618	0.101		
14									63	Charanthimath Layout-5	0.000	0.000	0.000		
15									63	Shet complex tc	0.128	0.150	0.021		
16									63	Deshapande IP	0.355	0.420	0.065		
17									63	Charanthimath -6	0.000	0.000	0.000		
18									63	Hanumanth devar gudi	0.218	0.232	0.015		
19									63	Hebballi Form ARS	0.861	0.958	0.096		
20									63	DESHPANDE L/O	0.030	0.032	0.001		
21									63	JANVEKAR TC	0.026	0.030	0.004		
22									63	SHAH	0.365	0.379	0.014		
23									63	J.S.S. COLLEGE	4.591	4.598	0.007		
24									63	KAVALLI	0.208	0.216	0.008		
25									63	Airani lay out	0.214	0.225	0.011		
26									63	Veenashree Apartment	0.070	0.080	0.010		
27									63	Chanabasappa	0.844	0.897	0.053		
28									100	Amar Jyothi	1.262	1.349	0.086		
29									100	post office	0.950	1.250	0.299		
30									100	Gandhi Chouk	2.161	2.315	0.155		
31									100	Gadagi Maruthi TC	1.058	1.084	0.026		
32									100	Muttun Market	1.616	1.748	0.131		
33									100	Panchakacheri oni	2.220	2.369	0.149		
34									100	Raviwar peth	3.793	4.149	0.357		
35									100	Vidyaranya school	2.899	3.085	0.186		
36									100	Subhas Road	0.950	1.123	0.173		
37									100	Manakilla Main	0.765	0.868	0.103		
38									100	Shivaji Road	1.850	2.051	0.201		
39									100	Kalakeri Saw mill	1.031	1.177	0.146		
40									100	Saw mill(Kerikelgin Oni)	0.804	0.857	0.053		
41									100	Charanthimath Layout -1	0.000	0.000	0.000		
42									100	Koulikeri	3.626	3.912	0.287		
43									100	Kamanakatti	4.766	5.108	0.343		
44									100	Laxminarayan Gudi	1.231	1.442	0.211		
45									100	Bombay Restorant	2.376	2.540	0.163		
46									100	Bara imam galli	Idle	Idle	0.000		
47									100	Kameli TC	4.589	4.989	0.400		
48									100	MR Nagar 1	Idle	Idle	0.000		
49									100	Mr Nagar 2	2.757	2.955	0.199		
50									100	MR Nagar 3	1.254	1.347	0.093		
51									100	Matti parappan koot	4.141	4.346	0.205		
52									100	Mukthidam -1	0.391	0.411	0.020		
53									100	Mukthidam -2	0.601	0.623	0.022		
54									100	Neeralikatti IP	1.181	1.289	0.108		

Sl. No.	Name of Division	Name of PSS	Voltage Level	PRT Capacity in MVA	Name of Outgoing 11 kV Feeder	A	B	C = B-A	Distribution Transformer Capacity in kVA/ Bulk	Distribution Transformer Location/ Code	D	E	F=E-D	C-F	% of 11 kV Loss w.r.t. Input Energy
						Initial meter reading at 11 kV side of PSS (LU)	Final meter reading at 11 kV side of PSS (LU)	Energy consumption at 11 kV outgoing meter at source end during interval in LU			Initial meter reading at LT side of DTR (LU)	Final meter reading at LT side of DTR (LU)	Energy consumption at destination end during interval in LU	11 kV Line loss in LU	
55									100	Hebballi Form	1.557	2.026	0.469		
56									100	Gali IP TC	0.102	0.102	0.000		
57									100	Pendar oni	4.198	4.488	0.291		
58									100	TUSHAR TC	0.675	0.697	0.022		
59									100	KARISHETTY COMPL	0.402	0.415	0.013		
60									100	Sharada Residency	0.046	0.052	0.006		
61									100	CITY LINE APPT	0.279	0.290	0.011		
62									100	GONDALI	0.353	0.363	0.010		
63									100	KOODLANNAVER	0.094	0.122	0.028		
64									100	J.S.S BUS STOP	2.709	2.796	0.087		
65									100	AGNIHOTRI	0.323	0.372	0.050		
66									100	Madina I	0.317	0.331	0.014		
67									100	Madina II	Idle	Idle	0.000		
68									100	Madina III	0.498	0.526	0.027		
69									100	Shambavi Colony 5	0.580	0.599	0.020		
70									100	Shambavi Clny 4	0.648	0.673	0.025		
71									100	Shambavi Clny 3	0.231	0.241	0.010		
72									100	Shambavi Clny 2	HDLC	0.081	0.000		
73									100	Shambvi Clny 1	1.620	1.671	0.051		
74									100	Police Staion	2.172	2.237	0.065		
75									250	Super Market	3.719	4.114	0.394		
76									250	Daroga TC	9.834	9.986	0.152		
77									250	Hebballi Agasi	6.339	6.937	0.598		
78									250	Charanthimath Layout -2	0.000	0.000	0.000		
79									250	Charanthimath Layout-3	0.000	0.000	0.000		
80									250	Charanthimath Layout-4	0.000	0.000	0.000		
81									250	Navalur Agasi	4.798	5.316	0.518		
SUB-TOTAL (16)						**920.664**	**930.19**	**9.526**			**105.413**	**114.334**	**8.840**	**0.686**	**7.199**
1	DHARWAD	KUD	110/11 KV		KCD	478.784	489.379	10.595	25	MAHAMANE BADAVANE TATA DOCOMO TOWER	0.030	0.060	0.030	0.763	7.203
2									25	SAPTHAPUR BHAVI TOWER TC	0.000	0.246	0.246		
3									25	BSNL TOWER	1.586	1.998	0.412		
4									63	SHIVAGANGA APPARTMENT	0.228	0.244	0.017		
5									63	GURU APPARTMENT	0.184	0.256	0.072		
6									63	RAGHAVENDRA COLONY- TC-NO 02 11220307061	0.001	0.027	0.026		
7									63	ASHWINI APPARTMENT 11220307002	0.019	0.036	0.017		
8									63	JOSHI LAYOUT TC 5000009983	0.181	0.258	0.077		
9									63	SHREYAS APPARTMENT 112601313	0.170	0.183	0.012		

Sl. No.	Name of Division	Name of PSS	Voltage Level	PRT Capacity in MVA	Name of Outgoing 11 kV Feeder	A	B	C = B-A	Distribution Transformer Capacity in kVA/ Bulk	Distribution Transformer Location/ Code	D	E	F=E-D	C-F	% of 11 kV Loss w.r.t. Input Energy
						Initial meter reading at 11 kV side of PSS (LU)	Final meter reading at 11 kV side of PSS (LU)	Energy consumption at 11 kV outgoing meter at source end during interval in LU			Initial meter reading at LT side of DTR (LU)	Final meter reading at LT side of DTR (LU)	Energy consumption at destination end during interval in LU	11 kV Line loss in LU	
10									63	VIGNA RAJENDRA RESIDENCY TC 112501321	0.082	0.099	0.017		
11									63	AMBEDKAR BHAVAN 11250307001	0.014	0.028	0.014		
12									63	BHARATI NAGAR SPUN POLE TC-1 11220307005	0.344	0.498	0.154		
13									63	GANGA APPT. 112501775	0.029	0.043	0.014		
14									63	UB HILL CIRCLE 112501279	0.254	0.278	0.024		
15									63	COMMERCIAL TAX TC 465	0.116	0.138	0.021		
16									63	GUNJAN APPT. 11220307003	0.084	0.099	0.015		
17									63	MASTER OF TOURISM ADMINISTRATION	0.016	0.024	0.008		
18									63	NADIGAR COMPOUND TC 112601319	0.300	0.377	0.077		
19									63	THIMMANNA GOUDER COLLEGE TC 112601315	0.038	0.050	0.013		
20									63	ALUR VENKATARAYA BHAVAN	0.013	0.018	0.005		
21									63	CHIEF ENGINEER OFFICE	0.626	0.688	0.062		
22									63	KAVERI HOSTEL 1	1.113	1.296	0.182		
23									63	KAVERI HOSTEL 2	0.091	0.108	0.017		
24									63	Lingaraj School Bharathi Ngr	0.033	0.100	0.067		
25									63	Indoor Stadium	0.242	0.269	0.027		
26									63	Diet	0.107	0.123	0.016		
27									63	Indraprastha Appartment	0.036	0.044	0.009		
28									100	YENDIGERI TC 112601286	0.845	0.992	0.148		
29									100	SHANTI SADANA SCHOOL 11220307047	3.121	3.267	0.146		
30									100	MAHAMANE BADAVANE 11220307033	0.232	0.291	0.059		
31									100	MITCHGIN LAYOUT TC NO.03 112601299	0.335	0.596	0.261		
32									100	MITCHGIN LAYOUT TC NO.02 11220307036	0.667	0.711	0.044		
33									100	RAGHAVENDRA COLONY 112601306	1.237	1.318	0.080		
34									100	SADASHIVA NAGAR 112601308	4.216	4.533	0.318		
35									100	MITCHGIN TC NO. 01 112601302	IDLE	IDLE	0.000		
36									100	AMGI APPARTMENT 112601278	0.566	0.613	0.047		
37									100	WOOD SIDE APPARTMENT 50000026777	1.034	1.187	0.153		
38									100	GOLDEN JUBILEE 11220307012	0.044	0.149	0.105		

Sl. No.	Name of Division	Name of PSS	Voltage Level	PRT Capacity in MVA	Name of Outgoing 11 kV Feeder	A	B	C = B-A	Distribution Transformer Capacity in kVA/ Bulk	Distribution Transformer Location/ Code	D	E	F=E-D	C-F	% of 11 kV Loss w.r.t. Input Energy
						Initial meter reading at 11 kV side of PSS (LU)	Final meter reading at 11 kV side of PSS (LU)	Energy consumption at 11 kV outgoing meter at source end during interval in LU			Initial meter reading at LT side of DTR (LU)	Final meter reading at LT side of DTR (LU)	Energy consumption at destination end during interval in LU	11 kV Line loss in LU	
39									100	PHADI BASAVESHWARA COLONY -1 11220307064	0.261	0.381	0.120		
40									100	PHADI BASAVESHWARA COLONY -2 50000010427	0.024	0.125	0.102		
41									100	BHARATI NAGAR SPUN POLE TC-2 11220307007	2.008	2.152	0.144		
42									100	V.V.K PLAZA	0.023	0.135	0.112		
43									100	JANAKI GARDEN TC 112601283	0.151	0.298	0.147		
44									100	KALYAN NAGAR 15 th CROSS 11220307030	1.455	1.584	0.129		
45									100	KITCHEN NET TC 112601293	0.085	0.190	0.105		
46									100	KESAVA NAGAR TC 112601292	2.152	2.321	0.169		
47									100	VENKATADARI COLONY 112601284	0.360	0.522	0.161		
48									100	UDAYA HOSTEL TC.448 50000010078	0.202	0.348	0.145		
49									100	SHARADA APPART 11220307048	0.121	0.152	0.031		
50									100	MORE FOUNDATION TC	0.485	0.529	0.044		
51									100	JAKATI PLOT 11220307018	0.211	0.311	0.100		
52									100	SPANDANA HOSPITAL 50000026758	0.360	0.405	0.046		
53									100	UDAYA HOSTEL CIRCLE TC 112601318	2.265	2.735	0.470		
54									100	BBA COLLEGE TC 112601268	0.048	0.261	0.213		
55									100	KALSURMATH TC 11220307021	2.702	2.968	0.265		
56									100	DC OFFICE 112601274	1.090	1.215	0.125		
57									100	WATER BOARD 112601322	0.291	0.325	0.035		
58									100	KCD CIRCLE	1.965	2.128	2.065		
59									100	KCD COLLEGE	0.254	0.322	0.068		
60									100	KCD CIRCLE SPUN POLE TC 11220307026	3.828	4.099	0.271		
61									100	SAPTHAPUR BHAVI TC 11220307045	1.423	1.625	0.202		
62									100	PWD QUARTERS 11220307040	0.301	0.321	0.020		
63									100	HEAD POST MASTER GNRL TC	0.033	0.201	0.169		
64									100	MINI VIDHANA SOUDHA	0.130	0.173	0.043		
65									100	MANDHARA HOTEL	0.051	0.062	0.011		
66									100	KANNADA SAHITY PARISHAD TC	1.743	1.880	0.137		
67									100	TELEPHONE EXCHANGE	1.106	1.274	0.167		

Sl. No.	Name of Division	Name of PSS	Voltage Level	PRT Capacity in MVA	Name of Outgoing 11 kV Feeder	A	B	C = B-A	Distribution Transformer Capacity in kVA/ Bulk	Distribution Transformer Location/ Code	D	E	F=E-D	C-F	% of 11 kV Loss w.r.t. Input Energy
						Initial meter reading at 11 kV side of PSS (LU)	Final meter reading at 11 kV side of PSS (LU)	Energy consumption at 11 kV outgoing meter at source end during interval in LU			Initial meter reading at LT side of DTR (LU)	Final meter reading at LT side of DTR (LU)	Energy consumption at destination end during interval in LU	11 kV Line loss in LU	
68									100	R N S Stadium	1.237	1.336	0.099		
69									100	Godavari Hostel TC	0.555	HDLC	0.000		
70									100	Ulavi Basappa Temple	0.652	0.820	0.167		
71									200	Arcological dept	0.307	0.342	0.035		
72									250	LIC 250	3.298	3.636	0.338		
73									250	Guttal Ayurveda college	0.573	0.939	0.366		
SUB-TOTAL (17)						**478.784**	**489.379**	**10.595**			**49.984**	**57.359**	**9.832**	**0.763**	**7.203**
1	DHARWAD	LAKAMANAHALLI	110/11 KV		Express	1968.760	1977.561	8.801	63	BANASHRI LAY OUT	0.239	0.297	0.059	0.618	7.020
2									63	Nidawani Layout 3	0.149	0.284	0.135		
3									63	Rayal Meenaxi Appt (Binge)	0.443	0.999	0.556		
4									63	K.H.B. Colony	0.989	1.142	0.153		
5									63	K.H.B. Colony	0.000	0.000	0.000		
6									63	K.H.B. Colony	0.109	0.213	0.104		
7									63	K.H.B. Colony	0.022	0.025	0.003		
8									63	K.H.B. Colony	0.003	0.762	0.759		
9									63	K.H.B. Colony	0.205	0.214	0.009		
10									63	K.H.B. Colony	0.059	0.476	0.417		
11									63	K.H.B. Colony	0.000	0.000	0.000		
12									63	K.H.B. Colony	0.002	0.339	0.337		
13									63	K.H.B. Colony	0.115	0.486	0.371		
14									63	K.H.B. Colony	0.554	0.697	0.143		
15									63	K.H.B. Colony	0.083	0.091	0.008		
16									100	DANESVARINAGAR 1	0.206	0.211	0.005		
17									100	DANESVARINAGAR 2	2.031	2.237	0.206		
18									100	DANESVARINAGAR 3	HDLC	HDLC	0.000		
19									100	LIDKAR Colony	1.984	2.068	0.084		
20									100	SAPTAGIRI LAY OUT 1	0.008	0.008	0.000		
21									100	SAPTAGIRI LAY OUT 2	0.962	0.996	0.034		
22									100	SAPTAGIRI LAY OUT 3			0.000		
23									100	SAPTAGIRI LAY OUT 4	0.026	0.127	0.101		
24									100	SAPTAGIRI LAY OUT 5	0.069	0.072	0.003		
25									100	SAPTAGIRI LAY OUT 6	0.043	0.045	0.002		
26									100	SAPTAGIRI LAY OUT 7	0.076	0.081	0.005		
27									100	SAPTAGIRI LAY OUT 8	Idle	Idle	0.000		
28									100	SAPTAGIRI LAY OUT9	0.010	0.011	0.000		
29									100	SHANKRI LAY OUT (MAT)1	0.793	0.817	0.024		
30									100	SHANKRI LAY OUT	Idle	Idle	0.000		
31									100	SHANKRI LAY OUT	0.915	0.970	0.054		
32									100	BANASHRI LAY OUT	0.568	0.587	0.019		
33									100	MAYUR PARK 3	0.355	0.368	0.012		
34									100	MAYUR PARK 2	Idle	Idle	0.000		

Sl. No.	Name of Division	Name of PSS	Voltage Level	PRT Capacity in MVA	Name of Outgoing 11 kV Feeder	A	B	C = B-A	Distribution Transformer Capacity in kVA/ Bulk	Distribution Transformer Location/ Code	D	E	F=E-D	C-F	% of 11 kV Loss w.r.t. Input Energy
						Initial meter reading at 11 kV side of PSS (LU)	Final meter reading at 11 kV side of PSS (LU)	Energy consumption at 11 kV outgoing meter at source end during interval in LU			Initial meter reading at LT side of DTR (LU)	Final meter reading at LT side of DTR (LU)	Energy consumption at destination end during interval in LU	11 kV Line loss in LU	
35									100	MAYUR PARK 1	0.927	0.961	0.034		
36									100	KUMARESHVAR	0.272	0.281	0.010		
37									100	KUMARESHVAR	0.626	0.647	0.021		
38									100	KUMARESHVAR	1.142	1.201	0.059		
39									100	Veerabhadreshwar Layout	1.329	1.467	0.138		
40									100	BASAV SHANT NAGAR3	Idle	Idle	0.000		
41									100	BASAV SHANT NAGAR2	0.027	0.034	0.007		
42									100	BASAV SHANT NAGAR1	0.013	0.016	0.003		
43									100	BAVIKATTI PLOT	1.298	1.334	0.036		
44									100	BAVIKATTI PLOT	1.521	1.561	0.040		
45									100	BAVIKATTI PLOT	0.419	0.442	0.024		
46									100	SHANKARPUR 2	0.671	0.686	0.016		
47									100	SHANKARPUR 1	0.566	0.587	0.021		
48									100	Sharada colony 1	3.467	3.587	0.119		
49									100	Sharada colony 2	1.979	2.051	0.072		
50									100	Nidawani Layout 2	Idle	Idle	0.000		
51									100	CHALUKYA 1	0.016	0.115	0.099		
52									100	CHALUKYA 2	0.004	0.005	0.001		
53									100	CHALUKYA 3	V.Fail	V.Fail	0.000		
54									100	CHALUKYA 4	0.001	0.001	0.000		
55									100	CHALUKYA 5	0.028	0.029	0.001		
56									100	Soumitra Layout	0.087	0.135	0.048		
57									100	C.M.D.R	0.094	0.099	0.005		
58									100	CHANDRIKA 1	0.332	0.345	0.013		
59									100	CHANDRIKA 2	0.087	0.912	0.825		
60									100	CHANDRIKA 3	1.563	1.983	0.420		
61									100	HUKKERIKAR KHB	1.368	1.414	0.046		
62									100	K.H.B. Colony	0.089	1.471	1.382		
63									100	New CITB Layout	0.431	0.923	0.492		
64									100	New CITB Layout	0.746	0.879	0.133		
65									100	New CITB Layout	0.364	0.748	0.384		
66									100	STATION QTRS	0.001	0.132	0.131		
SUB-TOTAL (18)						**1968.760**	**1977.561**	**8.801**			**30.484**	**38.668**	**8.183**	**0.618**	**7.020**
1	DHARWAD	TADASINAKOPPA	110/11 KV		AIR	444.597	449.501	4.904	25	WIRE LESS &CABLE	0.131	0.166	0.035	0.390	7.945
2									63	VANSHREE NAGAR SECTOR NO 11 TC5	0.000	0.000	0.000		
3									63	K S PATIL LAYOUT TC	0.000	0.000	0.000		
4									63	VANSHREE NAGAR SECTOR NO 8 TC 9	0.081	0.102	0.021		
5									63	IGNALLI IP TC	0.439	0.659	0.220		
6									63	CHINGI IP TC	0.548	0.825	0.277		
7									63	TARITAREY PETROL BUNK	0.091	0.118	0.027		

Sl. No.	Name of Division	Name of PSS	Voltage Level	PRT Capacity in MVA	Name of Outgoing 11 kV Feeder	A	B	C = B-A	Distribution Transformer Capacity in kVA/ Bulk	Distribution Transformer Location/ Code	D	E	F=E-D	C-F	% of 11 kV Loss w.r.t. Input Energy
						Initial meter reading at 11 kV side of PSS (LU)	Final meter reading at 11 kV side of PSS (LU)	Energy consumption at 11 kV outgoing meter at source end during interval in LU			Initial meter reading at LT side of DTR (LU)	Final meter reading at LT side of DTR (LU)	Energy consumption at destination end during interval in LU	11 kV Line loss in LU	
8									63	VIVIDA CHEMICAL	0.025	0.027	0.002		
9									63	COTMAC TC	0.023	0.027	0.004		
10									63	KHB W/S DUBLLE ROAD	0.091	0.115	0.024		
11									63	AISHWARYAPARK TC 2	IDEL	IDEL	0.000		
12									100	VANSHREE NAGAR SECTOR NO 7TC6	0.001	0.001	0.000		
13									100	VANSHREE NAGAR SECTOR NO 7TC5	0.000	0.000	0.000		
14									100	VANSHREE NAGAR SECTOR NO 12TC7	0.001	0.001	0.000		
15									100	VANSHREE NAGAR SECTOR NO 12TC10	0.001	0.001	0.000		
16									100	VANSHREE NAGAR SECTOR NO 12TC9	HDLC	HDLC	0.000		
17									100	VANSHREE NAGAR SECTOR NO 12TC8	0.545	0.587	0.041		
18									100	VANSHREE NAGAR SECTOR NO 11 TC	0.001	0.001	0.000		
19									100	VANSHREE NAGAR SECTOR NO 11 TC3	0.001	0.001	0.000		
20									100	VANSHREE NAGAR SECTOR NO 11 TC	0.101	0.105	0.004		
21									100	VANSHREE NAGAR SECTOR NO 11 TC 1	0.001	0.001	0.000		
22									100	VANSHREE NAGAR SECTOR NO 11 TC 7	0.001	0.001	0.000		
23									100	VANSHREE NAGAR SECTOR NO 11 TC 9	0.076	0.121	0.045		
24									100	VANSHREE NAGAR SECTOR NO 10 TC 8	0.001	0.001	0.000		
25									100	VANSHREE NAGAR SECTOR NO 10 TC 9	0.013	0.016	0.003		
26									100	VANSHREE NAGAR SECTOR NO 10 TC 6	0.002	0.002	0.000		
27									100	VANSHREE NAGAR SECTOR NO 10 TC 5	0.005	0.007	0.002		
28									100	VANSHREE NAGAR SECTOR NO 10 TC 1	0.059	0.060	0.000		
29									100	VANSHREE NAGAR SECTOR NO 10 TC 4	0.091	0.099	0.008		
30									100	VANSHREE NAGAR SECTOR NO 10 TC 3	0.038	0.049	0.010		
31									100	VANSHREE NAGAR SECTOR NO 8 TC 4	0.043	0.055	0.012		
32									100	VANSHREE NAGAR SECTOR NO 8 TC 5	0.075	0.095	0.020		
33									100	VANSHREE NAGAR SECTOR NO 9 TC 2	0.017	0.021	0.004		

Sl. No.	Name of Division	Name of PSS	Voltage Level	PRT Capacity in MVA	Name of Outgoing 11 kV Feeder	A	B	C = B-A	Distribution Transformer Capacity in kVA/ Bulk	Distribution Transformer Location/ Code	D	E	F=E-D	C-F	% of 11 kV Loss w.r.t. Input Energy
						Initial meter reading at 11 kV side of PSS (LU)	Final meter reading at 11 kV side of PSS (LU)	Energy consumption at 11 kV outgoing meter at source end during interval in LU			Initial meter reading at LT side of DTR (LU)	Final meter reading at LT side of DTR (LU)	Energy consumption at destination end during interval in LU	11 kV Line loss in LU	
34									100	VANSHREE NAGAR SECTOR NO 9 TC 3	0.024	0.031	0.007		
35									100	VANSHREE NAGAR SECTOR NO 9 TC 4	0.012	0.014	0.002		
36									100	VANSHREE NAGAR SECTOR NO 9 TC 5	0.112	0.147	0.035		
37									100	VANSHREE NAGAR SECTOR NO 9 TC 6	0.029	0.037	0.008		
38									100	K S PATIL LAYOUT TC	0.001	0.001	0.000		
39									100	VANSHREE NAGAR SECTOR NO 9 TC 7	0.061	0.076	0.015		
40									100	VANSHREE NAGAR SECTOR NO 9 TC 1	0.001	0.001	0.000		
41									100	VANSHREE NAGAR SECTOR NO 9 TC 9	0.028	0.036	0.008		
42									100	VANSHREE NAGAR SECTOR NO 9 TC 8	0.029	0.037	0.008		
43									100	VANSHREE NAGAR SECTOR NO 8 TC 10	0.102	0.102	0.000		
44									100	VANSHREE NAGAR SECTOR NO 8 TC 3	0.009	0.024	0.015		
45									100	VANSHREE NAGAR SECTOR NO 8 TC 7	0.001	0.001	0.000		
46									100	VANSHREE NAGAR SECTOR NO 8 TC 8	0.001	0.001	0.000		
47									100	VANSHREE NAGAR SECTOR NO 8 TC 6	0.273	0.377	0.104		
48									100	VANSHREE NAGAR SECTOR NO 8 TC 1	0.037	0.047	0.010		
49									100	VANSHREE NAGAR SECTOR NO 7 TC 1	0.001	0.001	0.000		
50									100	VANSHREE NAGAR SECTOR NO 7 TC 2	0.001	0.001	0.000		
51									100	VANSHREE NAGAR SECTOR NO 7 TC 3	0.001	0.001	0.000		
52									100	VANSHREE NAGAR SECTOR NO 3 TC 2	0.001	0.001	0.000		
53									100	VANSHREE NAGAR SECTOR NO 3 TC	0.109	0.136	0.027		
54									100	VANSHREE NAGAR SECTOR NO 3 TC	0.001	0.001	0.000		
55									100	VANSHREE NAGAR SECTOR NO 3 TC	0.021	0.027	0.006		
56									100	VANSHREE NAGAR SECTOR NO 3 TC	0.069	0.076	0.007		
57									100	VANSHREE NAGAR SECTOR NO 3 TC	0.056	0.072	0.016		
58									100	VANSHREE NAGAR SECTOR NO 3 TC	0.081	0.104	0.023		

Sl. No.	Name of Division	Name of PSS	Voltage Level	PRT Capacity in MVA	Name of Outgoing 11 kV Feeder	A	B	C = B-A	Distribution Transformer Capacity in kVA/ Bulk	Distribution Transformer Location/ Code	D	E	F=E-D	C-F	% of 11 kV Loss w.r.t. Input Energy
						Initial meter reading at 11 kV side of PSS (LU)	Final meter reading at 11 kV side of PSS (LU)	Energy consumption at 11 kV outgoing meter at source end during interval in LU			Initial meter reading at LT side of DTR (LU)	Final meter reading at LT side of DTR (LU)	Energy consumption at destination end during interval in LU	11 kV Line loss in LU	
59									100	VANSHREE NAGAR SECTOR NO 3 TC	0.001	0.001	0.000		
60									100	BASWEHWAR NAGER SATTUR	0.488	0.516	0.028		
61									100	SATTUR VILLAGE TC	0.375	0.475	0.100		
62									100	HANGAL TC	0.461	0.582	0.122		
63									100	SYNDICATE BANK TC	2.669	2.842	0.173		
64									100	CHAIRMEN GESCO	0.001	0.001	0.000		
65									100	RAJENDRA METELS	0.190	0.246	0.056		
66									100	AGVA FUN FOOD TC	0.013	0.014	0.001		
67									100	RONAD TC	0.318	0.404	0.086		
68									100	PAWAR OIL MILL TC	0.163	0.191	0.027		
69									100	TRIVENI	1.940	2.124	0.184		
70									100	AISHWARYAPARK TC 1	0.033	0.043	0.010		
71									100	SHREAYA PARK	IDEL	IDEL	0.000		
72									100	VANSHREE NAGAR SECTOR NO 13	0.832	0.961	0.129		
73									100	VANSHREE NAGAR SECTOR NO 13	0.750	0.962	0.212		
74									100	VANSHREE NAGAR SECTOR NO 13	0.129	0.152	0.023		
75									100	VANSHREE NAGAR SECTOR NO 13	0.229	0.353	0.124		
76									100	ASHARY COLONY SATTUR 1	0.333	0.333	0.000		
77									100	ASHARY COLONY SATTUR 2	0.509	0.509	0.000		
78									100	ASHARY COLONY SATTUR 3	0.042	0.042	0.000		
79									100	VANSHREE NAGAR SECTOR NO 13	0.316	0.316	0.000		
80									100	C V MARAD	0.001	0.001	0.000		
81									100	VANSHREE NAGAR SECTOR NO 13	0.007	0.007	0.000		
82									250	Basweshwar nager Sattur	0.618	0.691	0.073		
83									250	SDM Manny Tower	0.400	0.451	0.050		
84									250	Mahajan TC	0.362	0.411	0.049		
85										HT 196			0.637		
86										HT 138			0.497		
87										HT 148			0.771		
88									500	Town Ship	0.931	1.041	0.110		
SUB-TOTAL (19)						**444.597**	**449.501**	**4.904**			**15.670**	**18.279**	**4.514**	**0.390**	**7.945**
TOTAL [SUB-TOTAL (1) to (19)] :						**11273.819**	**11399.208**	**125.389**			**744.213**	**844.725**	**116.707**	**8.682**	**6.924**
Dharwad Division 11 kV side Input Energy								**489.507**	**Dharwad Division 11 kV Line Loss w.r.t. Input Energy (11 kV Side)**					**33.895**	**6.924**
1	HUBLI	PH COMPOUND	110/ 11 kV	35 MVA	A Trunk	673.380	683.604	10.224	63	Bengari TC	0.121	0.196	0.075	0.443	4.328

Sl. No.	Name of Division	Name of PSS	Voltage Level	PRT Capacity in MVA	Name of Outgoing 11 kV Feeder	A	B	C = B-A	Distribution Transformer Capacity in kVA/ Bulk	Distribution Transformer Location/ Code	D	E	F=E-D	C-F	% of 11 kV Loss w.r.t. Input Energy
						Initial meter reading at 11 kV side of PSS (LU)	Final meter reading at 11 kV side of PSS (LU)	Energy consumption at 11 kV outgoing meter at source end during interval in LU			Initial meter reading at LT side of DTR (LU)	Final meter reading at LT side of DTR (LU)	Energy consumption at destination end during interval in LU	11 kV Line loss in LU	
2									63	Bafana Complex TC	0.283	0.399	0.116		
3									100	Rudrakshimatha TC	2.958	3.220	0.262		
4									100	Gantikeri Oni TC	5.292	5.594	0.302		
5									100	Toravi Galli TC	1.582	1.732	0.150		
6									100	Muthagi TC	0.219	0.323	0.104		
7									100	Jain Complex TC	0.243	0.480	0.236		
8									100	Vithobha Galli TC	0.591	0.807	0.216		
9									100	Bardan Sal TC	1.555	1.770	0.215		
10									100	Indra Bhavan TC	0.620	0.896	0.276		
11									200	Akki Honda TC	4.639	5.511	0.872		
12									250	Itagi Maruthi Galli TC	2.733	3.326	0.593		
13									250	Bellary Galli TC	3.342	3.998	0.656		
14									250	Hirepeth TC	2.678	3.189	0.511		
15									250	Bommapur Oni TC	4.860	5.418	0.558		
16									250	Byali Oni TC	3.038	3.582	0.545		
17									250	New English School TC	2.127	2.831	0.704		
18									250	Badiger Oni TC	4.506	5.045	0.539		
19									250	Bhuspeth TC	5.318	6.014	0.695		
20									250	Desai Oni TC	4.750	5.434	0.685		
21									500	Sarafgatti TC	4.925	6.395	1.470		
SUB-TOTAL (1)						**673.380**	**683.604**	**10.224**			**56.379**	**66.161**	**9.782**	**0.443**	**4.328**
1	HUBLI	PH COMPOUND	110/ 11 kV	35 MVA	Mangalwarpet	469.605	474.933	5.328	25	Tower TC	0.320	0.396	0.076	0.307	5.755
2									63	Kalburgi TC	0.320	0.480	0.160		
3									100	KDO School	0.304	0.536	0.232		
4									100	Mahabaleshwar TC	2.132	2.255	0.123		
5									100	Jolad Oni TC	2.759	2.944	0.185		
6									100	Shivalinga Apartment TC	1.048	1.260	0.213		
7									100	Pai Maharaj TC	3.451	3.605	0.154		
8									100	Benakannavar Complex TC	0.273	0.449	0.176		
9									100	Shettar TC	0.152	0.365	0.214		
10									100	Mahajan TC	0.032	0.237	0.205		
11									250	Church TC	3.758	4.154	0.395		
12									250	Dharmadas TC	4.341	4.750	0.409		
13									250	Umadi TC	5.232	5.448	0.216		
14									250	K.B. Nagar	2.218	2.683	0.465		
15									250	Yallapur Oni	1.162	1.574	0.412		
16									250	Sheelavanthar Oni TC	0.994	1.511	0.517		
17									250	Walvekar Galli TC	0.797	1.282	0.486		
18									250	Settlement TC	9.190	9.576	0.386		
SUB-TOTAL (2)						**469.605**	**474.933**	**5.328**			**38.482**	**43.504**	**5.021**	**0.307**	**5.755**

Sl. No.	Name of Division	Name of PSS	Voltage Level	PRT Capacity in MVA	Name of Outgoing 11 kV Feeder	A	B	C = B-A	Distribution Transformer Capacity in kVA/ Bulk	Distribution Transformer Location/ Code	D	E	F=E-D	C-F	% of 11 kV Loss w.r.t. Input Energy
						Initial meter reading at 11 kV side of PSS (LU)	Final meter reading at 11 kV side of PSS (LU)	Energy consumption at 11 kV outgoing meter at source end during interval in LU			Initial meter reading at LT side of DTR (LU)	Final meter reading at LT side of DTR (LU)	Energy consumption at destination end during interval in LU	11 kV Line loss in LU	
1	HUBLI	BIDNAL	220/ 11 kV	220 MVA	S.G. Nagar	43.680	44.870	1.190	25	S.G. Nagar TC No-1	0.502	0.543	0.042	0.056	4.723
2									25	S.G. Nagar TC No-2	0.176	0.192	0.016		
3									25	S.G. Nagar TC No-3	0.398	0.427	0.029		
4									25	S.G. Nagar TC No-4	0.318	0.335	0.018		
5									25	S.G. Nagar TC No-5	0.535	0.570	0.035		
6									25	S.G. Nagar TC No-6	0.456	0.488	0.032		
7									25	S.G. Nagar TC No-7	0.451	0.484	0.032		
8									25	S.G. Nagar TC No-8	0.338	0.405	0.067		
9									25	S.G. Nagar TC No-9	0.627	0.672	0.044		
10									25	S.G. Nagar TC No-10	0.067	0.082	0.015		
11									25	S.G. Nagar TC No-11	0.048	0.061	0.014		
12									25	S.G. Nagar TC No-12	0.339	0.363	0.024		
13									25	S.G. Nagar TC No-13	0.474	0.503	0.029		
14									25	S.G. Nagar TC No-14	0.900	0.961	0.062		
15									25	S.G. Nagar TC No-15	0.160	0.186	0.027		
16									25	S.G. Nagar TC No-16	0.201	0.234	0.032		
17									25	S.G. Nagar TC No-17	0.374	0.406	0.031		
18									25	Aircel Tower TC	0.161	0.172	0.011		
19									63	K.K. Nagar TC	1.974	2.110	0.136		
20									100	Patil IP Set TC	0.063	0.159	0.096		
21									100	Settlement Extension TC No-1	1.979	2.033	0.054		
22									100	Settlement Extension TC No-2	0.183	0.312	0.129		
23									100	Padhyanhakkal TC	0.643	0.802	0.159		
SUB-TOTAL (3)						**43.680**	**44.870**	**1.190**			**11.368**	**12.502**	**1.134**	**0.056**	**4.723**

Sl. No.	Name of Division	Name of PSS	Voltage Level	PRT Capacity in MVA	Name of Outgoing 11 kV Feeder	A	B	C = B-A	Distribution Transformer Capacity in kVA/ Bulk	Distribution Transformer Location/ Code	D	E	F=E-D	C-F	% of 11 kV Loss w.r.t. Input Energy
						Initial meter reading at 11 kV side of PSS (LU)	Final meter reading at 11 kV side of PSS (LU)	Energy consumption at 11 kV outgoing meter at source end during interval in LU			Initial meter reading at LT side of DTR (LU)	Final meter reading at LT side of DTR (LU)	Energy consumption at destination end during interval in LU	11 kV Line loss in LU	
1	HUBLI	BIDNAL	220/ 11 kV	220 MVA	BIDNAL	500.519	506.628	6.109	63	Laxmi Nagar TC	0.571	0.645	0.074	0.291	4.763
2									63	Maruthi Nagar TC	0.992	1.007	0.015		
3									63	Kalburgi TC	0.165	0.247	0.082		
4									63	Power Gas TC	0.061	0.100	0.039		
5									63	Veternary TC	1.064	1.103	0.039		
6									63	Reliance Pump TC	0.843	0.942	0.100		
7									100	Neelgund TC No-1	2.045	2.150	0.106		
8									100	Neelgund TC No-2	0.949	1.232	0.284		
9									100	Neelgund TC No-3	0.491	0.708	0.217		
10									100	Neelgund TC No-4	0.990	1.199	0.209		
11									100	Neelgund TC No-5	0.637	0.896	0.259		
12									100	High School TC	1.267	1.364	0.098		
13									100	Sureban Layout Tc No-1	5.267	5.597	0.330		
14									100	Sureban Layout Tc No-2	0.334	0.361	0.027		
15									100	Sureban Layout Tc No-3	2.233	2.360	0.128		
16									100	Sureban Layout Tc No-4	0.579	0.636	0.057		
17									100	Kachhi Adda TC	5.098	5.420	0.322		
18									100	Sudagadgatti TC	0.174	0.193	0.019		
19									100	Shankthi Nagar TC	1.365	1.476	0.111		
20									100	Nagpur Garage TC	1.653	1.778	0.125		
21									100	Magar (Sajjan Supari) TC	1.125	1.201	0.075		
22									100	Neeli TC	0.805	1.171	0.366		
23									100	Purohit TC	0.336	0.357	0.021		
24									100	Lifton India TC	0.368	0.488	0.120		
25									100	Kotekar TC	3.150	3.389	0.240		
26									100	P & T Exchange Tc	0.744	0.875	0.131		
27									250	Bidnal Village TC	0.419	0.654	0.234		
28									250	Siddeshwar TC	0.926	1.029	0.103		
29									250	Jartargar TC	4.898	5.434	0.536		
30									250	Garden Peth TC	0.766	1.257	0.490		
31									250	Hugar Oni TC	2.064	2.258	0.194		
32									250	Satkar Hotel TC	2.886	3.191	0.306		
33									250	Indira Nagar TC	4.067	4.428	0.361		
SUB-TOTAL (4)						**500.519**	**506.628**	**6.109**			**49.330**	**55.148**	**5.818**	**0.291**	**4.763**
1	HUBLI	BIDNAL	220/ 11 kV	220 MVA	GABBUR	13.822	17.784	3.962	25	Indus Tower TC	0.195	0.210	0.015	0.154	3.88
2									25	Tower TC	0.343	0.381	0.038		
3									63	Old Gabbur TC	0.645	0.758	0.113		
4									63	Mudhol Ip Set TC	0.600	0.797	0.196		
5									100	Kampli TC	0.831	1.117	0.286		
6									100	Neeli Ip Set TC	1.840	2.069	0.230		
7									100	Ganesh Trailor TC	1.874	2.157	0.283		

Sl. No.	Name of Division	Name of PSS	Voltage Level	PRT Capacity in MVA	Name of Outgoing 11 kV Feeder	A	B	C = B-A	Distribution Transformer Capacity in kVA/ Bulk	Distribution Transformer Location/ Code	D	E	F=E-D	C-F	% of 11 kV Loss w.r.t. Input Energy
						Initial meter reading at 11 kV side of PSS (LU)	Final meter reading at 11 kV side of PSS (LU)	Energy consumption at 11 kV outgoing meter at source end during interval in LU			Initial meter reading at LT side of DTR (LU)	Final meter reading at LT side of DTR (LU)	Energy consumption at destination end during interval in LU	11 kV Line loss in LU	
8									100	Petrol Pump TC	0.119	0.247	0.128		
9									100	Mehata TC	0.267	0.521	0.254		
10									100	L.G.Godown TC	0.221	0.359	0.139		
11									100	Chamber Line TC	0.133	0.355	0.222		
12									100	Kabbu Belegarara Sanga TC	0.184	0.282	0.098		
13									100	Hosur IP Set TC	2.063	2.213	0.150		
14									100	Roshan Garage TC	0.164	0.469	0.305		
15									100	Nandi Highway TC	1.034	1.148	0.114		
16									100	Neelgund TC No-1	2.587	2.980	0.392		
17									100	Neelgund TC No-2	0.740	0.903	0.163		
18									100	Neelgund TC No-3	1.804	1.983	0.179		
19									100	Neelgund TC No-4	0.656	0.846	0.190		
20									100	Neelgund TC No-5	1.537	1.677	0.140		
21									250	New Gabbur TC	2.654	3.310	0.657		
22									250	Mahaveer Marble TC	2.438	3.115	0.677		
SUB-TOTAL (5)						**13.822**	**17.784**	**3.962**			**16.600**	**20.409**	**3.808**	**0.154**	**3.879**
TOTAL [SUB-TOTAL (1) to (5)] :						**1701.006**	**1727.819**	**26.813**			**172.159**	**197.722**	**25.563**	**1.250**	**4.662**
Hubli Division 11 kV side Input Energy								**327.914**	**Hubli Division 11 kV Line Loss w.r.t. Input Energy (11 kV Side)**					**15.287081**	**4.662**
1	GADAG	Gajendragad	110/ 11 kV	30	Gajendragad	1090.760	1102.450	11.690	25	Kaddi TC	0.179	0.187	0.008	0.727	6.218
2									25	BAMS College TC	1.360	1.379	0.019		
3									25	Kalakaleshwara w/s TC	1.714	1.718	0.004		
4									25	Kalakaleshwara w/s TC	0.565	0.579	0.014		
5									25	Durgadevi W/S TC	35.809	35.829	0.020		
6									25	Vijaya Colony TC	188.804	188.844	0.040		
7									25	G.S.Patil -1 TC	7.219	7.239	0.020		
8									25	G.S.Patil -2 TC	0.575	0.606	0.032		
9									25	Janatha Plot TC-1	18.414	18.436	0.021		
10									25	Janatha Plot TC-2	13.445	13.505	0.060		
11									25	APDRP TC	1.751	1.773	0.022		
12									25	IB TC	2.592	2.658	0.067		
13									25	GJD (DNR Road) W/S TC	6.647	6.679	0.031		
14									25	Daba(Apdrp)	8.598	8.652	0.054		
15									25	Pagi TC (Ginning)	2.321	2.346	0.025		
16									25	Hutch Tower	0.015	0.021	0.005		
17									25	GJD WW (Kaddi Plot)	0.375	0.389	0.014		
18									25	Airtel Tower	1.652	1.745	0.094		
19									25	KLK W/S	4.229	4.279	0.049		
20									25	TMC Slatter House	3.512	3.590	0.078		
21									25	W/S DTC	1.643	1.655	0.013		
22									25	Kumbar TC	0.001	0.001	0.000		

Sl. No.	Name of Division	Name of PSS	Voltage Level	PRT Capacity in MVA	Name of Outgoing 11 kV Feeder	A	B	C = B-A	Distribution Transformer Capacity in kVA/ Bulk	Distribution Transformer Location/ Code	D	E	F=E-D	C-F	% of 11 kV Loss w.r.t. Input Energy
						Initial meter reading at 11 kV side of PSS (LU)	Final meter reading at 11 kV side of PSS (LU)	Energy consumption at 11 kV outgoing meter at source end during interval in LU			Initial meter reading at LT side of DTR (LU)	Final meter reading at LT side of DTR (LU)	Energy consumption at destination end during interval in LU	11 kV Line loss in LU	
23									63	Angadi(Gdg road) TC	11.215	11.235	0.020		
24									63	Bhoomaraddi TC	30.374	30.374	0.000		
25									63	Shivaraddi TC	2.800	3.000	0.200		
26									63	Kalakaleshwara w/s TC	12.336	12.379	0.043		
27									63	Dindur w/s TC	4.303	4.323	0.020		
28									63	Rampur w/s TC	0.747	0.767	0.020		
29									63	Chinivalara TC	0.430	0.450	0.020		
30									63	Vadegola TC	0.617	0.817	0.200		
31									63	KHDC TC	2.531	2.731	0.200		
32									63	Pujar TC	1.734	1.797	0.063		
33									63	Kattimani TC	2.923	2.983	0.060		
34									63	Halakeri TC	0.763	0.883	0.120		
35									63	Bhoomaraddi TC	0.882	0.950	0.068		
36									63	Hucchaianamath TC	0.516	0.597	0.080		
37									63	Angadi TC	0.459	0.499	0.040		
38									63	Mathapathi TC	1.434	1.451	0.016		
39									63	Gangakalyana TC	0.742	0.783	0.041		
40									63	Madakeri TC	0.135	0.175	0.040		
41									63	Bandi TC	1.108	1.134	0.026		
42									63	Gangakalyana TC	0.175	0.181	0.006		
43									63	Kordhyanamatha TC	8.142	8.258	0.115		
44									63	Rathod(GK) TC	0.015	0.021	0.006		
45									63	Rajur W/S	14.235	14.351	0.115		
46									63	Vajpay Nagar TC-2	17.042	17.304	0.262		
47									63	Hutch Tower (Ganjipeth)	8.151	8.215	0.064		
48									63	Malagi Complex	24.698	24.886	0.188		
49									63	Jeere Layout TC-2	0.001	0.002	0.001		
50									63	Revadi Layout TC-3	0.001	0.002	0.001		
51									75	Unachageri Village TC	0.712	0.812	0.100		
52									100	APMC TC	7.286	7.686	0.400		
53									100	Jalihala TC	8.872	9.018	0.146		
54									100	KSSIDC-I TC	0.565	0.865	0.300		
55									100	KSSIDC-II TC	1.145	1.445	0.300		
56									100	KSSIDC-III TC	3.491	3.791	0.300		
57									100	Hiremani TC	2.138	2.348	0.210		
58									100	Javali TC	2.133	2.159	0.026		
59									100	Hooli TC	16.701	16.827	0.125		
60									100	Navanagar TC	6.784	7.084	0.300		
61									100	Sharifmatha TC	14.279	14.420	0.140		
62									100	Angadi TC	25.437	25.737	0.300		
63									100	Unachageri W/S TC	7.427	7.727	0.300		
64									100	Chowkimatha TC	6.411	6.590	0.179		

Sl. No.	Name of Division	Name of PSS	Voltage Level	PRT Capacity in MVA	Name of Outgoing 11 kV Feeder	A	B	C = B-A	Distribution Transformer Capacity in kVA/ Bulk	Distribution Transformer Location/ Code	D	E	F=E-D	C-F	% of 11 kV Loss w.r.t. Input Energy
						Initial meter reading at 11 kV side of PSS (LU)	Final meter reading at 11 kV side of PSS (LU)	Energy consumption at 11 kV outgoing meter at source end during interval in LU			Initial meter reading at LT side of DTR (LU)	Final meter reading at LT side of DTR (LU)	Energy consumption at destination end during interval in LU	11 kV Line loss in LU	
65									100	Agasi TC	0.989	0.999	0.010		
66									100	Durgadevi TC	0.075	0.086	0.011		
67									100	TMC TC	4.469	4.769	0.300		
68									100	Menasinakai TC	2.182	2.255	0.073		
69									100	Sonnad TC	70.863	71.237	0.374		
70									100	Shivajipet TC	21.809	21.890	0.081		
71									100	Bus Depot TC	0.243	0.273	0.030		
72									100	Raibagi TC	0.045	0.047	0.001		
73									100	Halakeri TC	0.704	0.704	0.000		
74									100	Lalappa Rathod TC	2.626	2.997	0.371		
75									100	KLK Ginning Center TC	27.720	27.976	0.256		
76									100	United Sheeds	9.694	9.738	0.044		
77									100	Redd Ginning	11.104	11.258	0.154		
78									100	Vajpay Nagar TC1	6.038	6.306	0.269		
79									100	Janta Plat 1	0.036	0.047	0.011		
80									100	Janata Plat 2	0.200	0.238	0.038		
81									100	VGRaibagi TC	28.341	28.517	0.176		
82									100	Devaragudda Zinning TC	0.001	0.001	0.000		
83									100	Sanknur Layout TC	0.002	0.003	0.001		
84									100	Pujar Granites	0.001	0.002	0.001		
85									100	Jeere Layout TC-1	0.001	0.003	0.001		
86									100	Revadi Layout TC-1	0.001	0.002	0.001		
87									100	Revadi Layout TC-2	0.001	0.003	0.002		
88									200	Old Bus-stand TC	43.508	44.125	0.616		
89									200	College TC	122.783	123.170	0.387		
90									250	Sajjana TC	13.120	13.765	0.646		
91									250	Nekar - I TC	57.749	58.169	0.420		
92									250	Nekar - II TC	48.869	49.708	0.839		
SUB-TOTAL (1)						**1090.760**	**1102.450**	**11.690**			**1026.486**	**1037.449**	**10.963**	**0.727**	**6.218**
1	GADAG	Naregal	110/ 11 kV	20	Naregal	332.880	335.745	2.865	25	GADDIHALLA W/S TC (Budhihala Road)	3.097	3.132	0.034	0.149	5.196
2									25	GADDIHALLA W/S TC(Halakeri road)	1.474	1.519	0.046		
3									25	Airtel Tower	16.972	16.973	0.001		
4									25	Dyampur TC	8.522	8.537	0.015		
5									25	Kalakannavar College TC	13.144	13.145	0.001		
6									63	Buldozar Nagar TC	12.900	12.972	0.072		
7									63	Veereshwara Oil Mill TC	0.026	0.030	0.004		
8									63	Sumpith TC	10.125	10.220	0.095		
9									63	Telephone Exchange TC	5.275	5.364	0.089		
10									63	Hescom Colony TC	0.860	0.871	0.012		
11									63	Gaddihalla W/S TC	0.096	0.115	0.020		

Sl. No.	Name of Division	Name of PSS	Voltage Level	PRT Capacity in MVA	Name of Outgoing 11 kV Feeder	A	B	C = B-A	Distribution Transformer Capacity in kVA/ Bulk	Distribution Transformer Location/ Code	D	E	F=E-D	C-F	% of 11 kV Loss w.r.t. Input Energy
						Initial meter reading at 11 kV side of PSS (LU)	Final meter reading at 11 kV side of PSS (LU)	Energy consumption at 11 kV outgoing meter at source end during interval in LU			Initial meter reading at LT side of DTR (LU)	Final meter reading at LT side of DTR (LU)	Energy consumption at destination end during interval in LU	11 kV Line loss in LU	
12									63	KPTCL Colony TC	19.047	19.066	0.019		
13									63	College TC	8.190	8.257	0.067		
14									100	Wadder Oni TC	52.221	52.409	0.187		
15									100	Bus-Stand TC	4.959	5.200	0.241		
16									100	Police Station TC	5.147	5.153	0.007		
17									100	Rahut Bhavi TC	18.181	18.295	0.114		
18									100	Government Hospital TC	20.819	21.074	0.255		
19									100	Nagarkeri TC	38.097	38.268	0.171		
20									100	Annadaneshwara Colony TC	21.513	21.660	0.147		
21									100	Kodikoppa Village TC	6.095	6.176	0.081		
22									250	Gajendragada Road TC	6.476	6.956	0.480		
23									250	Gadag Road TC	38.973	39.533	0.560		
SUB-TOTAL (2)						**332.880**	**335.745**	**2.865**			**312.207**	**314.924**	**2.716**	**0.149**	**5.196**
1	GADAG	Ron	110/ 11 kV	30	Ron	2921.91	2928.321	6.411	25	Water supply TC	14.070	14.115	0.045	0.389	6.071
2									25	Huggi Mill Behind TC	4.646	4.752	0.107		
3									25	Ayurvedic Medical Clg.TC	2.724	2.780	0.055		
4									25	Social welfare Office TC	2.416	2.530	0.114		
5									25	Janatha plot TC	0.503	0.550	0.047		
6									25	Naduvinakeri TC	3.949	4.020	0.072		
7									63	Sanglad Oil mill(new)	3.043	3.090	0.047		
8									63	Bus-Stand TC	8.750	8.807	0.057		
9									63	Huggi Poultry Form TC	13.227	13.428	0.201		
10									63	Industrial TC	15.730	15.831	0.101		
11									63	Itagi Saw mill TC	4.511	4.714	0.203		
12									63	Krishnapura W/S TC	84.818	84.940	0.123		
13									63	Water supply Plant TC	8.265	8.417	0.151		
14									63	Mallapura road w/s TC	15.011	15.073	0.062		
15									63	Goudar Complex TC	1.011	1.036	0.025		
16									63	TMC TC	19.866	19.996	0.130		
17									63	Mahapurushamatha TC	14.987	15.105	0.118		
18									63	Cholachagudda TC	5.120	5.502	0.382		
19									100	Jiddibagila TC	0.930	1.020	0.090		
20									100	Palled oilmill TC	2.730	2.933	0.203		
21									100	Palled TC	0.323	0.431	0.108		
22									100	Jakkali TC	19.748	19.860	0.113		
23									100	Huggi Mill TC	15.329	15.560	0.230		
24									100	KMF TC	0.613	0.717	0.104		
25									100	MRBC Colony TC	15.008	15.110	0.102		
26									100	Police Station TC	29.355	29.466	0.111		
27									100	MRBC Gate TC	9.527	9.700	0.173		
28									100	Jigalur TC	20.528	20.640	0.112		

Sl. No.	Name of Division	Name of PSS	Voltage Level	PRT Capacity in MVA	Name of Outgoing 11 kV Feeder	A	B	C = B-A	Distribution Transformer Capacity in kVA/ Bulk	Distribution Transformer Location/ Code	D	E	F=E-D	C-F	% of 11 kV Loss w.r.t. Input Energy
						Initial meter reading at 11 kV side of PSS (LU)	Final meter reading at 11 kV side of PSS (LU)	Energy consumption at 11 kV outgoing meter at source end during interval in LU			Initial meter reading at LT side of DTR (LU)	Final meter reading at LT side of DTR (LU)	Energy consumption at destination end during interval in LU	11 kV Line loss in LU	
29									100	Shivapete TC	9.470	9.707	0.237		
30									100	Huggi TC	20.702	20.994	0.292		
31									250	Potharajkatti TC	3.387	3.986	0.600		
32									250	PWD TC	1.389	2.089	0.700		
33									250	Santibazar TC	386.127	386.933	0.806		
SUB-TOTAL (3)						**2921.91**	**2928.321**	**6.411**			**757.809**	**763.831**	**6.022**	**0.389**	**6.071**
1	GADAG	Ron	110/ 11 kV		Ron Water Supply	99.265	103.646	4.381	25	Tahasildar Ipset TC	0.320	0.360	0.040	0.267	6.08
2									25	Radder(Patil) TC	0.239	0.303	0.064		
3									25	Rayanagoudar TC	1.683	1.716	0.033		
4									25	Kyathanagoudar TC	5.825	5.917	0.092		
5									25	Gadagi TC	1.308	1.362	0.054		
6									25	Janatha colony-1 TC	8.982	9.018	0.036		
7									25	Janatha colony-2 TC	0.844	0.880	0.035		
8									25	Ashraya Colony TC-1	2.670	2.751	0.081		
9									25	Ashraya Colony TC-2	1.582	1.648	0.066		
10									25	Ashraya Colony TC-3	7.769	7.819	0.050		
11									25	Ashraya Colony TC-4	3.436	3.496	0.060		
12									25	Hutch Tower (near Itagi Saw Mill)	1.284	1.364	0.080		
13									25	Kammar TC	2.538	2.573	0.035		
14									63	Krishnapura w/s TC	15.639	15.833	0.194		
15									63	Hooli IP set TC	5.912	6.146	0.234		
16									63	Govindagoudar TC	4.790	5.011	0.221		
17									63	Bhandari TC	15.969	16.191	0.222		
18									63	Sunkada TC	2.231	2.478	0.247		
19									63	Jakkalli TC	18.457	18.678	0.221		
20									63	Sajjan IP set TC	0.310	0.430	0.120		
21									63	Linganagoudra Petrol Bunk	6.561	6.822	0.262		
22									63	Minividanasoud Tc	82.464	82.698	0.234		
23									63	BCM Hostel TC	3.516	3.720	0.204		
24									100	Krishnapura Village TC	4.814	5.100	0.286		
25									100	KEB Colony TC	19.458	19.803	0.345		
26									100	Kulkarni IP set TC	1.333	1.624	0.291		
27									100	Sanglad oilmill TC	25.975	26.283	0.308		
SUB-TOTAL (4)						**99.265**	**103.646**	**4.381**			**245.908**	**250.023**	**4.114**	**0.267**	**6.083**
1	GADAG	Naragund	110/ 11 kV	20	Naragund	1.385	9.767	8.382	25	Navalgund	0.106	0.123	0.017	0.383	4.565
2									25	Basaweshwara Flot	0.425	0.448	0.024		
3									25	Saraswathi Nagara	0.604	0.625	0.021		
4									25	Relaince T C	0.272	0.286	0.014		
5									25	Aircel T C	0.100	0.116	0.015		
6									25	B S N L Tower Tc	0.304	0.315	0.012		

Sl. No.	Name of Division	Name of PSS	Voltage Level	PRT Capacity in MVA	Name of Outgoing 11 kV Feeder	A	B	C = B-A	Distribution Transformer Capacity in kVA/ Bulk	Distribution Transformer Location/ Code	D	E	F=E-D	C-F	% of 11 kV Loss w.r.t. Input Energy
						Initial meter reading at 11 kV side of PSS (LU)	Final meter reading at 11 kV side of PSS (LU)	Energy consumption at 11 kV outgoing meter at source end during interval in LU			Initial meter reading at LT side of DTR (LU)	Final meter reading at LT side of DTR (LU)	Energy consumption at destination end during interval in LU	11 kV Line loss in LU	
7									25	Tata Info	0.075	0.098	0.023		
8									25	Kori Qutores	0.155	0.170	0.015		
9									25	K G F T C	0.185	0.211	0.026		
10									63	Pattel Samill	1.048	1.106	0.059		
11									63	Mini Vidana Sowda	0.056	0.067	0.011		
12									63	I B T C	0.164	0.176	0.012		
13									63	Hosur Tc	2.154	2.300	0.147		
14									63	Halli Bai Nagara	0.171	0.237	0.067		
15									63	Belatgi Flot	1.511	1.846	0.335		
16									63	Waddetr Samill	0.078	0.096	0.018		
17									63	Milk Dairy	0.612	0.643	0.031		
18									63	Patrivana Tc 1	3.309	3.478	0.169		
19									63	Savalkar T C	0.002	0.006	0.004		
20									63	Vinayaka Nagara	0.570	0.608	0.038		
21									63	Vidya Giri T C	1.858	1.971	0.113		
22									63	Surukodu Watter Supply	2.591	2.746	0.155		
23									63	Mrbc	2.152	2.271	0.119		
24									63	Rachaya Nagara	2.271	2.411	0.140		
25									100	Tashildhar Office T C	3.477	3.844	0.367		
26									100	Police Quarters	0.396	0.509	0.113		
27									100	Desai Bhai Tc No 2	3.855	3.979	0.124		
28									100	Chaya Gining Fact 3	0.444	0.564	0.120		
29									100	Police Station Tc	1.844	1.955	0.110		
30									100	Rokuddi G F	3.285	3.507	0.222		
31									100	Basavanna Devara Gudi	2.833	3.023	0.191		
32									100	Arabu Jamadar Tc	0.704	0.894	0.190		
33									100	Desai Bhavi 1	3.194	3.379	0.185		
34									100	Chowdi T C	4.488	4.703	0.215		
35									100	Tmc Tc	2.228	2.429	0.201		
36									100	Urdu School	3.674	3.810	0.135		
37									100	Srinivas Oil Mill	0.192	0.234	0.042		
38									100	Basaweshwar G F -(Asuti Gf)	1.248	1.322	0.074		
39									100	Valada Oil Mill	1.296	1.346	0.050		
40									100	Post Office T C	1.046	1.110	0.064		
41									100	Bangal Kothi	1.483	1.546	0.063		
42									100	Hosa Keri T C	0.056	0.119	0.063		
43									100	Renuka Takies	2.431	2.535	0.104		
44									100	Old Tele Phone Exchange	2.197	2.345	0.148		
45									100	Reedy Bank	3.634	3.861	0.227		
46									100	K S R T C T C	0.429	0.519	0.090		
47									100	Siddeshwara College	2.396	2.543	0.147		
48									100	Adyapaka Nagara	2.225	2.351	0.126		

Sl. No.	Name of Division	Name of PSS	Voltage Level	PRT Capacity in MVA	Name of Outgoing 11 kV Feeder	A	B	C = B-A	Distribution Transformer Capacity in kVA/ Bulk	Distribution Transformer Location/ Code	D	E	F=E-D	C-F	% of 11 kV Loss w.r.t. Input Energy
						Initial meter reading at 11 kV side of PSS (LU)	Final meter reading at 11 kV side of PSS (LU)	Energy consumption at 11 kV outgoing meter at source end during interval in LU			Initial meter reading at LT side of DTR (LU)	Final meter reading at LT side of DTR (LU)	Energy consumption at destination end during interval in LU	11 kV Line loss in LU	
49									100	Dandapura Tc	5.366	5.679	0.313		
50									100	Navodaya School	0.467	0.612	0.145		
51									100	Naragundu Cotten T C	0.821	0.949	0.128		
52									100	Joythi G F	4.042	4.260	0.218		
53									100	Patrivana Tc 2	0.001	0.002	0.001		
54									100	Kanthi T C	0.277	0.558	0.281		
55									100	Hiremath	4.191	4.494	0.302		
56									250	Ratti Bhavi	0.802	1.538	0.735		
57									250	Kori Complex	3.704	4.626	0.922		
SUB-TOTAL (5)						**1.385**	**9.767**	**8.382**			**89.501**	**97.501**	**7.999**	**0.383**	**4.565004**
1	GADAG	Bellatti	110/ 11 kV	40	Shirhatti	195.489	199.775	4.286	25	Y.S. Patil	0.382	0.453	0.071	0.169	3.932
2									25	Sajjan IP	0.081	0.121	0.040		
3									25	Ashraya Colony DTC-1	0.303	0.368	0.065		
4									25	Ashraya Colony DTC-2	0.045	0.095	0.051		
5									25	Ashraya Colony DTC-3	0.026	0.069	0.043		
6									25	Spice Tower	0.611	0.667	0.056		
7									25	Haripura Plot	0.118	0.189	0.071		
8									25	Yelishirur Road W/S	0.691	0.751	0.060		
9									63	Telephone Exchange	1.056	1.202	0.146		
10									63	Vidyanagar	0.124	0.270	0.146		
11									63	Magadi Road	0.539	0.651	0.112		
12									63	Myageri	0.742	0.782	0.040		
13									63	SC/ ST Hostel	0.824	0.896	0.073		
14									63	Police Station	0.229	0.288	0.059		
15									63	Khanapur VG	4.820	4.963	0.142		
16									63	Radder IP	0.880	1.000	0.120		
17									63	Haripur VG	0.721	0.888	0.167		
18									63	Haripur Petrol Pump	9.164	9.314	0.150		
19									63	Haripur W/S	3.903	4.024	0.121		
20									100	HESCOM	0.816	0.942	0.126		
21									100	M.V. Soudha	2.353	2.485	0.132		
22									100	Kambli Shed	0.418	0.521	0.102		
23									100	Raja Takies	11.151	11.485	0.334		
24									100	Ramesh Oil Mill	0.575	0.672	0.097		
25									100	Noorshettar Oil Mill	1.242	1.449	0.208		
26									100	Horticulture	1.480	1.674	0.194		
27									100	Mathad	0.385	0.537	0.152		
28									100	Kurabageri	0.901	1.000	0.099		
29									100	Walmiki	1.290	1.449	0.159		
30									100	Library	0.685	0.796	0.111		
31									100	Govt. Hospital	0.435	0.796	0.361		

Sl. No.	Name of Division	Name of PSS	Voltage Level	PRT Capacity in MVA	Name of Outgoing 11 kV Feeder	A	B	C = B-A	Distribution Transformer Capacity in kVA/ Bulk	Distribution Transformer Location/ Code	D	E	F=E-D	C-F	% of 11 kV Loss w.r.t. Input Energy
						Initial meter reading at 11 kV side of PSS (LU)	Final meter reading at 11 kV side of PSS (LU)	Energy consumption at 11 kV outgoing meter at source end during interval in LU			Initial meter reading at LT side of DTR (LU)	Final meter reading at LT side of DTR (LU)	Energy consumption at destination end during interval in LU	11 kV Line loss in LU	
32									100	Khanapur Stone Crusher	0.573	0.885	0.311		
SUB-TOTAL (6)						**195.489**	**199.775**	**4.286**			**47.565**	**51.682**	**4.117**	**0.169**	**3.932**
TOTAL [SUB-TOTAL (1) to (6)] :						**4641.689**	**4679.704**	**38.015**			**2479.476**	**2515.409**	**35.932**	**2.083**	**5.479**
Gadag Division 11 kV side Input Energy :								**313.772**	**Gadag Division 11 kV Line Loss w.r.t. Input Energy (11 kV Side)**					**17.190**	**5.479**
Hubli Circle 11 kV Side Input Energy :								**1138.09**	**Hubli Circle 11 kV Line Loss w.r.t. Total Input Energy (11 kV side)**					**66.372**	**5.832**

N.B. : *Initial & Final Meter Reading values are multiplied with meter multification factor (M.F.).*

11 kV LINE LOSS ASSESSMENT
OF
GULBERGA CIRCLE
IN
KARNATAKA STATE

STUDY ON COMPONENT-WISE AT&C LOSSES ASSESSMENT FOR THE STATE OF KARNATAKA

C) 11 kV LINE LOSS ASSESSMENT DETAIL OF GULBARGA CIRCLE

Sl. No.	Name of Division	Name of PSS	Voltage Level	PTR Capacity in MVA	Name of Outgoing 11 kV Feeder	A	B	C=B-A	Distribution Transformer Capacity in KVA/Bulk	Distribution Transformer Location/ Code	D	E	F=E-D	G=C-∑F	% of 11 kV Loss w.r.t. Input Energy
						Initial Meter Reading at 11 kV side of PSS (LU)	Final Meter Reading at 11 kV side of PSS (LU)	Energy Consumption at 11 kV Outgoing Meter at source end during interval in LU			Initial Meter Reading at LT side of DTR (LU)	Final Meter Reading at LT side of DTR (LU)	Energy Consumption at Destination end during interval in LU	11 kV Line Loss in LU	
1	SEDAM	110/33/11KV CHINCHOLI	110/33/ 11KV	1X20+1X10	CHINCHOLI	1028.912	1034.506	5.594	100	Busdepo	0.214	0.481	0.268		
									100	Girls School	0.258	0.463	0.205		
									250	Girls School	0.138	0.642	0.504		
									100	Patel Colony	0.255	0.261	0.007		
									100	Ashok Patil	0.342	0.551	0.209		
									100	Dalmill	0.287	0.553	0.267		
									100	Telephone Exchange	0.243	0.250	0.007		
									100	Gandhi Chowk	0.144	0.417	0.273		
									100	Tahsil Office	0.241	0.515	0.274		
									63	Gandhi Chowk	0.246	0.253	0.006		
									100	Govt Hospital	0.074	0.280	0.205		
									100	SBI Chincholi	0.334	0.340	0.006		
									63	Nagayya	0.051	0.052	0.001		
									100	Waddaragalli I	0.205	0.389	0.184		
									100	Waddaragalli II	0.092	0.316	0.224		
									100	Old Hospital	0.275	0.477	0.203		
									250	Bidar Cross	0.278	0.964	0.687		
									250	Badidarga	0.233	0.240	0.006		
									63	Metri Quary	0.060	0.060	0.000		
									100	Buggi TC	0.102	0.306	0.204		
									63	Majeed area Chandapur	0.115	0.117	0.002		
									63	Dalmill	0.178	0.183	0.005		
									100	Housing Board Sunkad	0.241	0.447	0.206		
									100	Housing Board Darvesh	0.210	0.417	0.206		
									100	Police Quarters Chandapur	0.339	0.546	0.206		
									63	Telephone Exchange Chp	0.168	0.171	0.004		
									100	MUSS CNL	0.173	0.175	0.002		
									100	Court	0.032	0.033	0.001		
									25	ITI Colllege Chp	0.095	0.102	0.007		
									63	Housing Board 3	0.013	0.013	0.000		
									100	Ashraya Colony	0.087	0.351	0.264		

Sl. No.	Name of Division	Name of PSS	Voltage Level	PTR Capacity in MVA	Name of Outgoing 11 kV Feeder	A	B	C=B-A	Distribution Transformer Capacity in KVA/Bulk	Distribution Transformer Location/ Code	D	E	F=E-D	G=C-∑F	% of 11 kV Loss w.r.t. Input Energy
						Initial Meter Reading at 11 kV side of PSS (LU)	Final Meter Reading at 11 kV side of PSS (LU)	Energy Consumption at 11 kV Outgoing Meter at source end during interval in LU			Initial Meter Reading at LT side of DTR (LU)	Final Meter Reading at LT side of DTR (LU)	Energy Consumption at Destination end during interval in LU	11 kV Line Loss in LU	
									25	Thanda Chandapur	0.054	0.080	0.026		
									25	Tahsil Office United Telecom	0.023	0.041	0.018		
									25	Petrol pump Chp	0.001	0.030	0.029		
									25	BCM Hostel Chp	0.023	0.052	0.028		
									25	BCM Hostel near thanda	0.065	0.097	0.032		
									25	Dalmill	0.099	0.116	0.017		
									25	Nagayya Dalmill	0.033	0.068	0.035		
									63	Housing Board Bomma	0.050	0.176	0.126		
									63	Seed Farm W/S	0.045	0.109	0.063		
									63	Chimmaidilayi W/S	0.060	0.178	0.118		
									63	Baburao Patil IP TC	0.033	0.206	0.173		
Sub-Total (1)						**1028.912**	**1034.506**	**5.594**					**5.307**	**0.287**	**5.125**
2	SEDAM	220/110/11 KV	220/110/1	2X100+2X10	SEDAM			9.076	63	ASHARAYA COLONY	6.766	6.891	0.126		
									25	ASHOKA LODGE	1.076	1.116	0.040		
									63	BABA COLONY	0.217	0.235	0.018		
									100	BABA COLONY-1	0.719	0.859	0.140		
									100	BABUJI NAGER	0.794	0.839	0.045		
									100	BADIBASE	0.635	0.769	0.135		
									250	BSNL OFFICE NEAR-1	0.217	0.798	0.581		
									250	CHAWADI	13.875	14.388	0.514		
									100	DBR COMPOUND	7.822	8.050	0.228		
									250	GK ROAD	14.747	15.038	0.292		
									100	HOLI TIPPI	0.328	0.494	0.166		
									100	INDIRA NAGAR	11.856	11.970	0.114		
									100	JABBAR ADHA	8.028	8.271	0.243		
									63	KAGIMA DHABA	0.611	0.638	0.027		
									63	KAMLAVATI	0.033	0.043	0.010		
									250	KEB COLONY	13.162	13.582	0.420		
									63	KEB QUARTERS	0.934	1.074	0.140		
									100	KEB QUARTERS-1	0.013	0.033	0.020		
									25	KODALA CROSS	1.926	1.982	0.056		
									63	KWB (AWSS) SEDAM	0.033	0.060	0.027		
									63	LADDA	0.563	0.587	0.024		
									63	LNT FUNCTION HALL	0.024	0.049	0.025		
									100	LOHAR GALI	5.670	5.786	0.116		

Sl. No.	Name of Division	Name of PSS	Voltage Level	PTR Capacity in MVA	Name of Outgoing 11 kV Feeder	A	B	C=B-A	Distribution Transformer Capacity in KVA/Bulk	Distribution Transformer Location/ Code	D	E	F=E-D	G=C-∑F	% of 11 kV Loss w.r.t. Input Energy
						Initial Meter Reading at 11 kV side of PSS (LU)	Final Meter Reading at 11 kV side of PSS (LU)	Energy Consumption at 11 kV Outgoing Meter at source end during interval in LU			Initial Meter Reading at LT side of DTR (LU)	Final Meter Reading at LT side of DTR (LU)	Energy Consumption at Destination end during interval in LU	11 kV Line Loss in LU	
									250	LOHAR GALI-1	14.193	14.981	0.788		
									100	MALIKARJUN STRO	0.017	0.036	0.018		
									100	MALU	0.047	0.076	0.029		
									63	MINI VIDAN SOUDA	3.498	3.669	0.171		
									25	MINI VIDAN SOUDA-1	0.527	0.542	0.015		
									250	MOMINPURA	25.233	26.102	0.869		
									63	MUKRAM KHAN	0.046	0.069	0.023		
									63	NASIM POLISH	0.217	0.399	0.182		
									100	NEAR G HOSPITAL	0.232	0.282	0.051		
									250	NEAR G HOSPITAL-1	5.139	5.699	0.560		
									63	NEAR PUJA TENT HOUSE	0.137	0.277	0.139		
									63	NITIN SHAH	0.963	1.000	0.037		
									250	OLD SIMA ROAD	23.483	24.091	0.608		
									250	OPP INDIA POST	15.932	16.429	0.497		
									63	PETROL PUMP BHARTH	0.253	0.258	0.005		
									100	POLICE QUARTERS	1.826	1.851	0.025		
									63	POLISH MACHINE	0.607	0.633	0.026		
									63	RAILWAY STATION	4.528	4.528	0.000		
									100	SAI BABA COLONY	7.892	8.011	0.119		
									100	SANAXI	5.508	5.716	0.208		
									63	SEWADI	6.610	6.711	0.100		
									100	SHASTRI NAGAR	0.503	0.532	0.030		
									63	SLUM BOARD	2.238	2.256	0.019		
									25	STREET LIGHT	0.957	0.975	0.018		
									63	THOSNIWALA	0.600	0.613	0.013		
									100	V V K	6.522	6.631	0.109		
									63	VEERA REDDY	0.895	0.897	0.002		
									100	VENKATESH NAGER	8.286	8.419	0.133		
									100	VIDYA NAGAR	10.605	10.774	0.169		
									100	YOSHDHA TOWER	3.651	3.794	0.143		
Sub-Total (2)						**0.000**	**0.000**	**9.076**					**8.613**	**0.463**	**5.104**

Sl. No.	Name of Division	Name of PSS	Voltage Level	PTR Capacity in MVA	Name of Outgoing 11 kV Feeder	A	B	C=B-A	Distribution Transformer Capacity in KVA/Bulk	Distribution Transformer Location/ Code	D	E	F=E-D	G=C-∑F	% of 11 kV Loss w.r.t. Input Energy
						Initial Meter Reading at 11 kV side of PSS (LU)	Final Meter Reading at 11 kV side of PSS (LU)	Energy Consumption at 11 kV Outgoing Meter at source end during interval in LU			Initial Meter Reading at LT side of DTR (LU)	Final Meter Reading at LT side of DTR (LU)	Energy Consumption at Destination end during interval in LU	11 kV Line Loss in LU	
3	SEDAM	220/110/11 KV	110/11KV	2X100+2X10	SIROLLI			0.379	63	AGGI BASAVASEVRA COLONY	2.137	2.213	0.076		
									100	APMC	4.791	4.813	0.022		
									63	BUS DEPOT	1.151	1.172	0.021		
									100	CHOTA GIRNI NEAR	6.418	6.500	0.082		
									25	DONTA DALL MIL(TARNALLI CROSS)	1.967	1.981	0.014		
									25	GUMPA COLONY	0.667	0.672	0.005		
									63	INDUSTRIAL-1	2.698	2.717	0.019		
									63	INDUSTRIAL-3	0.941	0.951	0.009		
									63	MAHESWARI DALL MILL	1.439	1.442	0.004		
									63	N.T.COLLEGE	0.105	0.132	0.028		
									25	NEW IB	0.837	0.841	0.003		
									63	PATIL PRINTIG PRESS	0.102	0.113	0.011		
									25	REHABITATION CENTER	0.385	0.387	0.002		
									25	REHABITATION CENTER-1	0.249	0.251	0.002		
									25	REHABITATION CENTER-2	0.099	0.100	0.001		
									25	REHABITATION CENTER-3	0.153	0.165	0.011		
									25	REHABITATION CENTER-5	0.023	0.023	0.000		
									25	REHABITATION CENTER-6	0.115	0.123	0.007		
									25	REHABITATION CENTER-7	0.078	0.081	0.003		
									63	SHAH	0.054	0.069	0.015		
									100	TRIVEDI NAGAR-1	0.081	0.087	0.005		
									63	VISHWA NAGAR	0.062	0.065	0.003		
									25	WARE HOUSE	0.090	0.098	0.008		
									25	AIRTEL	0.183	0.192	0.009		
Sub-Total (3)								**0.379**					**0.361**	**0.018**	**4.844**
Sedam Division Total [Sub-Total (1) to (3)]								**15.049**					**14.281**	**0.768**	**5.106**
Sedam Division 11 kV side Input Energy								**188.860**	**Sedam Division 11 kV Line Loss w.r.t. Input Energy (11 kV Side)**					**9.642**	**5.106**
1	YADGIR	Ballichakra	33/11KV	2X5MVA	Mailapur F-4	19.134	20.840	1.707	25	Tayappa Bhangi TC	0.001	0.018	0.017		
									25	Laxman Khandepnor	0.005	0.009	0.004		
									63	Shivaraj IP Set TC	0.106	0.275	0.169		
									63	Monappa Ip TC	0.031	0.182	0.151		
									63	Basavraj margayya tc	0.113	0.289	0.176		
									25	Near Village , Ramappa Pittalar	0.063	0.080	0.017		
									63	Kishan Chavan IP TC	0.012	0.182	0.171		

Sl. No.	Name of Division	Name of PSS	Voltage Level	PTR Capacity in MVA	Name of Outgoing 11 kV Feeder	A	B	C=B-A	Distribution Transformer Capacity in KVA/Bulk	Distribution Transformer Location/ Code	D	E	F=E-D	G=C-∑F	% of 11 kV Loss w.r.t. Input Energy
						Initial Meter Reading at 11 kV side of PSS (LU)	Final Meter Reading at 11 kV side of PSS (LU)	Energy Consumption at 11 kV Outgoing Meter at source end during interval in LU			Initial Meter Reading at LT side of DTR (LU)	Final Meter Reading at LT side of DTR (LU)	Energy Consumption at Destination end during interval in LU	11 kV Line Loss in LU	
									63	sangappa bawoor tc	0.276	0.396	0.120		
									63	Sabanna buldi	0.007	0.163	0.156		
									63	Yellappa S/O Mallappa	0.030	0.193	0.163		
									63	nilappa alogera tc	0.031	0.187	0.156		
									25	Ramayya Chandra Rao TC	0.006	0.018	0.012		
									63	Devendrappa Uppar tc	0.107	0.287	0.180		
									63	Bhimshappa IP TC	0.080	0.213	0.132		
Sub-Total (1)						**19.134**	**20.840**	**1.707**					**1.624**	**0.082**	**4.821**
2	YADGIR	110/33/11 KV	110/33/11	2X10+1X20	Kandakur F-1	487.566	487.746	0.180	63	Gopalpur rd tc	0.007	0.008	0.001		
									63	Kandkoor Near Darga	0.261	0.280	0.019		
									63	Jalappa TC	0.150	0.152	0.002		
									63	Village and ip set	0.117	0.125	0.008		
									63	Thanda tc	0.129	0.133	0.004		
									63	Naganna gowda tc	0.120	0.122	0.002		
									63	Chintpalli Thanda Road IP Set	0.303	0.306	0.003		
									63	Eleri Road IP Set	0.041	0.043	0.002		
									25	Rajkumar IP	0.024	0.026	0.002		
									25	Mallappa IP Set Tc	0.010	0.011	0.000		
									25	Paramreddy TC	0.011	0.012	0.001		
									25	Gopal TC	0.007	0.009	0.002		
									25	Ravindrappa IP	0.004	0.006	0.002		
									25	Narasappa IP	0.002	0.003	0.001		
									63	Basalingappa IP TC	0.018	0.019	0.001		
									25	Shabbir TC	0.004	0.005	0.000		
									25	Harakera Water Supply TC	0.036	0.044	0.008		
									25	Mariyappa TC	0.120	0.121	0.001		
									25	Water Supply Tc	0.017	0.026	0.008		
									100	Mallappa IP Set TC	0.029	0.032	0.003		
									25	Ramanna IP Set TC	0.056	0.064	0.008		
									63	Arkeri Thanda IP Set	0.065	0.066	0.001		
									25	Venkappa TC	0.006	0.007	0.001		
									63	Kandkoor Road IP Set	0.220	0.221	0.001		
									63	Haraker thanda tc	0.071	0.085	0.014		
									25	Gouda TC	0.069	0.070	0.001		
									25	H.T IP Set	0.043	0.046	0.002		

Sl. No.	Name of Division	Name of PSS	Voltage Level	PTR Capacity in MVA	Name of Outgoing 11 kV Feeder	A	B	C=B-A	Distribution Transformer Capacity in KVA/Bulk	Distribution Transformer Location/ Code	D	E	F=E-D	G=C-∑F	% of 11 kV Loss w.r.t. Input Energy
						Initial Meter Reading at 11 kV side of PSS (LU)	Final Meter Reading at 11 kV side of PSS (LU)	Energy Consumption at 11 kV Outgoing Meter at source end during interval in LU			Initial Meter Reading at LT side of DTR (LU)	Final Meter Reading at LT side of DTR (LU)	Energy Consumption at Destination end during interval in LU	11 kV Line Loss in LU	
									63	Gouda TC	0.006	0.052	0.046		
									25	K Hanumanthappa IP	0.041	0.043	0.002		
									25	AyyappaIP	0.015	0.016	0.001		
									25	B. Basavrajapp TC	0.012	0.014	0.002		
									63	Kenchappa TC	0.061	0.062	0.001		
									25	Thatalgira IP Set TC	0.032	0.054	0.022		
									63	Devendrappa IP TC	0.106	0.107	0.001		
Sub-Total (2)						**487.566**	**487.746**	**0.180**					**0.173**	**0.007**	**4.083**
3	YADGIR	110/33/11 KV	110/33/11	2X10+1X20	Minaspur F-3	316.319	316.432	0.113	25	Airtel Tower TC	0.003	0.004	0.001		
									25	Konkal Village TC	0.031	0.032	0.001		
									100	Prathapreddy IP TC	0.214	0.230	0.016		
									25	Narayanpet Road I.P TC-1	0.084	0.085	0.001		
									25	Water Supply Tc	0.004	0.005	0.002		
									25	Narayanpet Road I.P TC-2	0.004	0.005	0.001		
									100	Ammapali Cross IP TC	0.372	0.385	0.013		
									100	Venkat Reddy TC	0.395	0.397	0.002		
									63	Village TC	0.573	0.584	0.011		
									63	Huller Bhavi IP	0.010	0.013	0.004		
									100	Minajpur I.P Set TC	0.128	0.130	0.002		
									100	Meenajpur Village TC-1	0.911	0.924	0.013		
									100	Meenajpur Village TC-2	0.426	0.441	0.015		
									25		0.076	0.077	0.000		
									25	Near Dattatraya Temple TC	0.024	0.024	0.000		
									100	Pothalar TC	0.031	0.035	0.004		
									63	Sanna Buddappa TC	0.019	0.021	0.002		
									25	Airtel Tower TC	0.028	0.033	0.005		
									63	Bheemareddy IP Set TC	0.022	0.024	0.001		
									63	Village TC	0.500	0.512	0.012		
									63	Kashappa IP	0.376	0.378	0.003		
											0.000	0.000	0.000		
Sub-Total (3)						**316.319**	**316.432**	**0.113**					**0.108**	**0.005**	**4.425**

Sl. No.	Name of Division	Name of PSS	Voltage Level	PTR Capacity in MVA	Name of Outgoing 11 kV Feeder	A	B	C=B-A	Distribution Transformer Capacity in KVA/Bulk	Distribution Transformer Location/ Code	D	E	F=E-D	G=C-∑F	% of 11 kV Loss w.r.t. Input Energy
						Initial Meter Reading at 11 kV side of PSS (LU)	Final Meter Reading at 11 kV side of PSS (LU)	Energy Consumption at 11 kV Outgoing Meter at source end during interval in LU			Initial Meter Reading at LT side of DTR (LU)	Final Meter Reading at LT side of DTR (LU)	Energy Consumption at Destination end during interval in LU	11 kV Line Loss in LU	
4	YADGIR	Gajarkot	33/11	2X5MVA	RAMPUR	102.864	104.448	1.584	63	Yampad Thanda IP Set TC	0.114	0.248	0.134		
									63	Kistayya IP Set TC	0.015	0.117	0.102		
									63	Husneppa IP Set TC	0.075	0.196	0.120		
									25	Bheemaraya IP Set TC	0.053	0.064	0.011		
									25	Jankeri IP Set	0.166	0.194	0.028		
									25	Shivpoor IP SET TC-1	0.024	0.028	0.004		
									63	Amarnayak I.P TC	0.023	0.126	0.103		
									63	Yampad Thanda W/S TC	0.067	0.168	0.100		
									63	Near to Tatalgeri Road	0.087	0.190	0.103		
									25	Yamada IP Set	0.029	0.033	0.004		
									25	Magadampur IP Set TC	0.031	0.035	0.004		
									100	Magdhapur Village IP Set	0.076	0.288	0.212		
									25	Yampad IP Set RC	0.009	0.010	0.001		
									25	Barli Nagappa IP Set	0.077	0.079	0.001		
									25	Rampur W/S TC	0.062	0.076	0.014		
									25	Narasappa IP S/o Hanmanthappa	0.140	0.152	0.012		
									63	Shivpur Village IP Set TC	0.011	0.111	0.100		
									63	Narasappa IP Set TC	0.043	0.148	0.105		
									25	Mallappa Ip	0.065	0.066	0.001		
									25	Jamindar IP Set	0.099	0.105	0.006		
									25	Near to Dadsoor Tatalgeri Village	0.042	0.043	0.001		
									63	Magadampur Village TC	0.019	0.120	0.101		
									63	Magadampur IP Set TC	0.077	0.188	0.111		
									63	Water Supply Tc	0.211	0.284	0.073		
									100	Malappa Kapar IP Set TC	0.021	0.082	0.060		
Sub-Total (4)						**102.864**	**104.448**	**1.584**					**1.512**	**0.072**	**4.516**
5	YADGIR	110/ 33/11 KV	110/33/11	1X20+2X10	Badiyal F-2	116.284	117.200	0.916	25	W/S TC	0.286	0.326	0.040		
									25	Anur.K (R.C Infosys)Hosur TC-9	0.065	0.069	0.004		
									25	Anur.K (R.C Infosys)Hosur TC-3	0.006	0.008	0.002		
									25	Mahadevappa Yadgir	0.009	0.009	0.000		
									25	Village TC	0.076	0.087	0.012		
									63	Opp Govt School TC	0.206	0.317	0.111		
									25	Behind Station Indranagar TC	0.064	0.083	0.019		
									25	River Bed Gondadgi IP TC	0.024	0.028	0.005		
									25	Doctor IP TC	0.011	0.017	0.006		

Sl. No.	Name of Division	Name of PSS	Voltage Level	PTR Capacity in MVA	Name of Outgoing 11 kV Feeder	A	B	C=B-A	Distribution Transformer Capacity in KVA/Bulk	Distribution Transformer Location/ Code	D	E	F=E-D	G=C-∑F	% of 11 kV Loss w.r.t. Input Energy
						Initial Meter Reading at 11 kV side of PSS (LU)	Final Meter Reading at 11 kV side of PSS (LU)	Energy Consumption at 11 kV Outgoing Meter at source end during interval in LU			Initial Meter Reading at LT side of DTR (LU)	Final Meter Reading at LT side of DTR (LU)	Energy Consumption at Destination end during interval in LU	11 kV Line Loss in LU	
									25	Anur.K (R.C Infosys)Hosur TC-6	0.003	0.003	0.001		
									25	Village TC	0.114	0.172	0.058		
									25	Anur.K (R.C Infosys)Hosur TC-8	0.006	0.008	0.002		
									63	Bheema River Bed , Bhjojappa Gowda TC	0.049	0.169	0.120		
									25	Village TC	0.091	0.105	0.013		
									25	Village W/S TC	0.013	0.015	0.002		
									63	Shankar Patil Land TC	0.002	0.015	0.013		
									63	Mudayalapa Gowda Land TC	2.878	2.979	0.101		
									63	Mehboob Sab Land TC	0.054	0.168	0.114		
									63	Bheema River Bed I.P TC , Behind School	0.078	0.183	0.105		
									63	Madhava Rao IP TC	0.008	0.056	0.048		
									25	Kontagi Savakar Land	0.008	0.008	0.000		
									63	Dr.bannappa Gouda tc	0.083	0.183	0.100		
Sub-Total (5)						**116.284**	**117.200**	**0.916**					**0.875**	**0.041**	**4.474**
6	YADGIR	Ballichakra	33/11 kv	2X5MVA	Killankera F-1	32.554	35.335	2.781	63	Katgur Noogin TC	0.204	0.305	0.101		
									25	Bugdi Hanumantha TC	0.032	0.085	0.053		
									25	Shankar Gowda TC	0.058	0.104	0.045		
									63	Rachayya Swamy TC	0.151	0.263	0.113		
									63	Desai Water Supply TC	0.014	0.124	0.111		
									63	Village TC	0.514	0.652	0.138		
									100	Saibana Narsappa Tc	0.012	0.360	0.348		
									25	Changin Sabanna TC	0.004	0.067	0.064		
									25	Hanumantha / Rama TC	0.000	0.068	0.067		
									100	Mallaya S/o Hallaya	0.220	0.431	0.212		
									25	Devappa Rathod TC	0.117	0.195	0.077		
									25	Bhimanna TC	0.076	0.142	0.066		
									25	Sabreddy Nagappa TC	0.005	0.069	0.063		
									25	Sanna Hanumantha TC	0.007	0.069	0.062		
									25	Behind Lake , sharnappa ZP Member	0.001	0.076	0.075		
									25	Koulur Road Raber Saibanna TC	0.015	0.069	0.053		
									25	Nagappa I.P TC	0.011	0.083	0.072		
									25	Chairman Devappa TC	0.049	0.093	0.044		
									63	Rekappa TC	0.048	0.157	0.109		
									25	Chinappa TC	0.063	0.073	0.010		
									25	Driver Sharanappa TC	0.008	0.019	0.011		

Sl. No.	Name of Division	Name of PSS	Voltage Level	PTR Capacity in MVA	Name of Outgoing 11 kV Feeder	A	B	C=B-A	Distribution Transformer Capacity in KVA/Bulk	Distribution Transformer Location/ Code	D	E	F=E-D	G=C-∑F	% of 11 kV Loss w.r.t. Input Energy
						Initial Meter Reading at 11 kV side of PSS (LU)	Final Meter Reading at 11 kV side of PSS (LU)	Energy Consumption at 11 kV Outgoing Meter at source end during interval in LU			Initial Meter Reading at LT side of DTR (LU)	Final Meter Reading at LT side of DTR (LU)	Energy Consumption at Destination end during interval in LU	11 kV Line Loss in LU	
									25	Behind Village Devappa Hotel TC	0.033	0.097	0.064		
									25	Hanumanthu Pujari TC	0.004	0.025	0.021		
									25	Bhimaraya Baswarajappa TC	0.012	0.050	0.038		
									25	Kud Hanmayya Baslingappa Harijan TC	0.007	0.038	0.031		
									25	Vitoba Ranganna TC	0.026	0.100	0.074		
									25	Village TC Goudgera	0.138	0.188	0.050		
									25	Kongi Bassappa TC	0.053	0.098	0.045		
									25	Dondappa Kotagur TC	0.085	0.146	0.061		
									25	Bavur Shankrappa TC	0.067	0.098	0.031		
									25	Bain Bhimraya TC	0.019	0.077	0.058		
									25	Laxman Kambar TC	0.011	0.083	0.072		
									25	Malappa TC	0.104	0.162	0.058		
									25	Kiuda Hanumantha Dodamani TC	0.013	0.078	0.065		
Sub-Total (6)						**32.554**	**35.335**	**2.781**					**2.560**	**0.220**	**7.924**
7	YADGIR	Ballichakra	33/11 kv	2X5MVA	Balichakra F-2	225.350	226.874	1.524	25	Balichakra Thanda W/S TC	0.013	0.017	0.004		
									63	Bannappa S/o Mallappa Byagar	0.100	0.107	0.007		
									100	Shannappa Master TC	0.211	0.523	0.313		
									25	Sankarappa Deveappa IP Set TC	0.011	0.019	0.008		
									25	W/S tc	0.013	0.024	0.011		
									63	Village TC	0.372	0.590	0.218		
									63	in Field I.P , Hanmanthappa I.P TC	0.026	0.228	0.202		
									25	Balichakra W/S TC	0.028	0.032	0.004		
									25	Chanappa IP TC	0.057	0.075	0.018		
									25	Road Side , Hanmanth TC	0.006	0.007	0.000		
									25	Balichakra Thanda W/S TC	0.003	0.003	0.000		
									25	Vali Chanayya IP TC	0.002	0.003	0.001		
									63	Bhimaraya Kurbur TC	0.046	0.218	0.172		
									25	Jilalpur Village TC	0.048	0.070	0.022		
									25	in Field I.P , Channu TC	0.002	0.003	0.000		
									63	Shankrappa IP TC	0.166	0.310	0.145		
									63	Laxman Chavan TC	0.064	0.086	0.023		
									25	Madwar W/S Road Side TC	0.015	0.026	0.011		
									25	Bheemraya Chavan IP TC	0.000	0.000	0.000		
									25	Sharnappa J IP TC	0.029	0.059	0.030		
									25	Shivappa Pujari	0.013	0.013	0.000		

Sl. No.	Name of Division	Name of PSS	Voltage Level	PTR Capacity in MVA	Name of Outgoing 11 kV Feeder	A	B	C=B-A	Distribution Transformer Capacity in KVA/Bulk	Distribution Transformer Location/ Code	D	E	F=E-D	G=C-∑F	% of 11 kV Loss w.r.t. Input Energy
						Initial Meter Reading at 11 kV side of PSS (LU)	Final Meter Reading at 11 kV side of PSS (LU)	Energy Consumption at 11 kV Outgoing Meter at source end during interval in LU			Initial Meter Reading at LT side of DTR (LU)	Final Meter Reading at LT side of DTR (LU)	Energy Consumption at Destination end during interval in LU	11 kV Line Loss in LU	
									25	Balichakra Thanda village TC	0.001	0.001	0.000		
									63	Lingamma Kotagar	0.038	0.044	0.006		
									63	Laxlman chavan Near TC	0.078	0.097	0.019		
									63	Sidappa Ramanna IP TC	0.149	0.200	0.051		
									63	Bandshwara Temple Tc	0.048	0.097	0.049		
									25	Indus Tower TC,	0.004	0.007	0.003		
									25	Road Side , Mallapa Nagappa TC	0.000	0.000	0.000		
									25	mailapur w/s tc	0.058	0.058	0.000		
									63	Somasankarappa tc	0.061	0.073	0.013		
									63	Naggappa IP Set Aaligeri	0.015	0.085	0.071		
									63	Sharanappa Gouda TC	0.142	0.154	0.012		
									63	Mahadevappa Kotanalli	0.076	0.088	0.012		
											0.000	0.000	0.000		
Sub-Total (7)						**225.350**	**226.874**	**1.524**					**1.425**	**0.099**	**6.525**
8	YADGIR	Jaigram	33/11 kv	2X5MVA	Azalapur F-2	105.036	106.105	1.069	100	Village TC-1	0.048	0.158	0.110		
									100	Shankrappa IP TC	0.018	0.126	0.107		
									63	Chandappa Sulagitti	0.217	0.233	0.016		
									100	Village TC	0.483	0.670	0.187		
									100	Jaigrama IP Set	0.031	0.232	0.201		
									63	Kankareddy Gowda	0.029	0.130	0.101		
									63	Main RoadTC	0.168	0.183	0.015		
									63	Maibali Land	0.093	0.108	0.014		
									63	Bimanna Land	0.076	0.082	0.006		
									63	I.P Set TC	0.017	0.019	0.002		
									63	Water Supply Tc	0.071	0.081	0.010		
									63	Chandrayya TC	0.207	0.228	0.021		
									63	Left Side I.P Set TC	0.015	0.097	0.082		
									63	Moulali TC	0.002	0.033	0.030		
									63	Azlapur IP TC	0.048	0.054	0.006		
									63	Hushanappa Kalald	0.152	0.167	0.015		
									63	Azmir Hussain Sab	0.068	0.074	0.006		
									63	Hanmanth Chandrappa Land	0.091	0.106	0.015		
									63	Main Road Right Side TC	0.067	0.073	0.007		

Sl. No.	Name of Division	Name of PSS	Voltage Level	PTR Capacity in MVA	Name of Outgoing 11 kV Feeder	A	B	C=B-A	Distribution Transformer Capacity in KVA/Bulk	Distribution Transformer Location/ Code	D	E	F=E-D	G=C-∑F	% of 11 kV Loss w.r.t. Input Energy
						Initial Meter Reading at 11 kV side of PSS (LU)	Final Meter Reading at 11 kV side of PSS (LU)	Energy Consumption at 11 kV Outgoing Meter at source end during interval in LU			Initial Meter Reading at LT side of DTR (LU)	Final Meter Reading at LT side of DTR (LU)	Energy Consumption at Destination end during interval in LU	11 kV Line Loss in LU	
									63	Baswareddy Land	0.274	0.278	0.004		
									63	Bhimrai Land	0.146	0.190	0.043		
									63	Main Road W/S TC	0.112	0.114	0.002		
Sub-Total (8)						**105.036**	**106.105**	**1.069**					**1.001**	**0.068**	**6.374**
9	YADGIR	Jaigram	33/11 kv	2X5MVA	Jaigram F-5	21.165	22.335	1.170	25	Basapur Road , Peda Hanmanta IP TC	0.074	0.085	0.011		
									100	Lamappa Horad I.p TC	0.239	0.612	0.373		
									25	Village TC	0.117	0.132	0.015		
									25	Near Temple W/S TC	0.031	0.035	0.004		
									63	Venkat Reddy IP Set TC	0.013	0.113	0.100		
									63	Sharanamma IP TC	0.011	0.197	0.185		
									63	Asokappa vahlampali IP	0.005	0.133	0.129		
									63	Basapur Road , Shankrappa Master TC	0.012	0.094	0.082		
									25	Indus Tower TC, Idlur Road	0.030	0.035	0.005		
									25	Lift Irrigation TC	0.039	0.049	0.009		
									25	Harijanwada Village TC	0.099	0.122	0.024		
									25	TurakalDoddi Rd. IP Set TC	0.040	0.047	0.007		
									63	Malanna Patil I.P TC	0.009	0.089	0.080		
									25	Indus Tower TC, Jaigram Road	0.002	0.003	0.000		
									25	Water Supply TC	0.001	0.009	0.008		
									63	Barmappa IP TC	0.004	0.006	0.001		
									63	W/S TC Near Village	0.026	0.090	0.064		
Sub-Total (9)						**21.165**	**22.335**	**1.170**					**1.098**	**0.072**	**6.170**
10	YADGIR	110/33/11 KV	110/33/11	2X10+1X20	Anpur F-6	53.149	53.342	0.193	63	Bheemshappa IP Set TC	0.205	0.207	0.002		
									63	Polamma Temple I.P TC	0.091	0.094	0.003		
									63	Darga TC	0.603	0.678	0.075		
									63	Basvraj IP Set TC	0.013	0.014	0.001		
									25	BSNL Tower TC	0.030	0.037	0.008		
									25	W/S TC	0.025	0.029	0.004		
									25	Venktraj Adrect	0.011	0.013	0.001		
									63	Khaza Pasha TC	0.150	0.153	0.002		
									25	Tower TC	0.062	0.071	0.009		
									100	Narsapur	0.003	0.016	0.013		
									100	Shivrai IP Set TC	0.137	0.144	0.007		
									100	Mattelamma TC	0.011	0.049	0.038		

Sl. No.	Name of Division	Name of PSS	Voltage Level	PTR Capacity in MVA	Name of Outgoing 11 kV Feeder	A	B	C=B-A	Distribution Transformer Capacity in KVA/Bulk	Distribution Transformer Location/ Code	D	E	F=E-D	G=C-∑F	% of 11 kV Loss w.r.t. Input Energy
						Initial Meter Reading at 11 kV side of PSS (LU)	Final Meter Reading at 11 kV side of PSS (LU)	Energy Consumption at 11 kV Outgoing Meter at source end during interval in LU			Initial Meter Reading at LT side of DTR (LU)	Final Meter Reading at LT side of DTR (LU)	Energy Consumption at Destination end during interval in LU	11 kV Line Loss in LU	
									25	In Village W/S TC	0.027	0.039	0.012		
									100	Ramesh Kulkarni	0.257	0.258	0.001		
									63	Hanmanth Reddy TC	0.015	0.016	0.001		
									25	SC onni Village TC	0.040	0.043	0.004		
Sub-Total (10)						**53.149**	**53.342**	**0.193**	**63**				**0.180**	**0.013**	**6.969**
Yadgir Division Total [Sub-Total (1) to (10)]								**11.237**					**10.556**	**0.681**	**6.058**
Yadgir Division 11 kV side Input Energy								**308.786**	**Yadgir Division 11 kV Line Loss w.r.t. Input Energy (11 kV Side)**					**18.706**	**6.058**
1	GULBARGA-I	V.K. SALAGAR	33/11KV	1X5MVA	F1 Ambalga			3.650	63	Ambalga Thanda Montle Land 63KVA DTC	0.051	0.158	0.107		
									25	Ambalga Village Airtel Tower 25KVA DTC	0.043	0.079	0.036		
									25	Ambalga Village Bridge W/S 25KVA DTC	0.009	0.041	0.032		
									25	Ambalga Village BSNL Wower 25KVA DTC	0.045	0.080	0.035		
									63	Ambalga Village Near Anganawadi Center 63KVA DTC	0.065	0.188	0.123		
									25	Ambalga Village Near Bannekar House 25KVA DTC	0.013	0.049	0.037		
									25	Ambalga Village Near Govt High School W/S 25KVA DTC	0.023	0.088	0.065		
									250	Ambalga Village Near Jiddi 250KVA DTC	0.243	0.919	0.676		
									25	Ambalga Village Near Maragamma Temple 25 KVA DTC	0.018	0.021	0.004		
									100	Ambalga Village Near Yallamma 100KVA DTC	0.065	0.292	0.227		
									100	Kalkutaga Village Near Ganesha Temple 100KVA DTC	0.064	0.295	0.231		
									25	Kudamud Thand W/S Near Dammur Dam 25KVA DTC	0.077	0.082	0.006		
									63	Kudamud Thanda 63KVA DTC	0.079	0.193	0.114		
									100	Kudamud Village Basavanna Temple 100KVA DTC	0.526	0.855	0.330		
									63	Kudamud Village Near Hipparagi Road W/S 63KVA DTC	0.006	0.118	0.113		
									25	Ladmugali Thand Near Lakamma Temple 25KVA DTC	0.043	0.048	0.005		
									63	Ladmugali Village 63KVA DTC	0.024	0.093	0.069		
									100	Ladmugali Village Near Hanuman Temple 100KVA DTC	8.782	9.012	0.230		
									25	Ladmugali Village Near Maragamma Temple 25KVA DTC	0.049	0.088	0.039		
									25	Madaki Thanda W/S Baliram Land 25KVA DTC	0.004	0.019	0.014		
									25	Madaki Thanda W/S Belakota Dam 25KVA DTC	0.038	0.045	0.008		
									63	Madki Thanda Village 63KVA	7.327	7.526	0.199		
									25	V K Salagar Thanda 25KVA DTC	0.055	0.078	0.023		
									25	V K Salgar Thanda W/S 25KVA DTC	0.233	0.326	0.093		
									63	Lengati Village Annappa Goundi Land 63KVA DTC	0.002	0.185	0.183		

Sl. No.	Name of Division	Name of PSS	Voltage Level	PTR Capacity in MVA	Name of Outgoing 11 kV Feeder	A Initial Meter Reading at 11 kV side of PSS (LU)	B Final Meter Reading at 11 kV side of PSS (LU)	C=B-A Energy Consumption at 11 kV Outgoing Meter at source end during interval in LU	Distribution Transformer Capacity in KVA/Bulk	Distribution Transformer Location/ Code	D Initial Meter Reading at LT side of DTR (LU)	E Final Meter Reading at LT side of DTR (LU)	F=E-D Energy Consumption at Destination end during interval in LU	G=C-∑F 11 kV Line Loss in LU	% of 11 kV Loss w.r.t. Input Energy
									100	Lengati Village Gaddi W/S & IP Set 100KVA DTC	0.067	0.332	0.264		
									25	Lengati Village Jagiradar Land W/S & IP Set 25KVA DTC	0.004	0.076	0.071		
									63	Lengati Village Main Road 100KVA DTC	0.049	0.157	0.109		
									25	Lengati Village SC Area 25KVA DTC	0.027	0.076	0.048		
Sub-Total (1)						0.000	0.000	3.650					**3.487**	**0.163**	**4.453**
2	GULBARGA-I	V.K. SALAGAR	33/11KV	1X5MVA	F2 V K Salgar			1.121	63	V K Salagar Village Ashray kalani 63KVA DTC	0.078	0.098	0.020		
									25	V K Salagar Village GTL Tower 25KVA DTC	0.008	0.010	0.002		
									25	V K Salagar Village Near Aircel Tower 25KVA DTC	0.087	0.091	0.004		
									25	V K Salagar Village Near Airtel Tower 25 KVA DTC	0.010	0.016	0.006		
									100	V K Salagar Village Near Belamagi Road 100KVA DTC	1.381	1.454	0.073		
									250	V.K.Salagar Village 250KVA DTC	0.092	0.883	0.791		
									100	V.K.Salagar Village Near Akcharabi Land 100KVA DTC	0.043	0.046	0.003		
									25	V.K.Salagar Village Near Belamagi Road Math W/S 25KVA	0.004	0.009	0.004		
									25	V.K.Salagar Village Near Biredar Gudda water Supply	0.065	0.070	0.004		
									63	V.K.Salagar Village SC Area 63KVA DTC	1.468	1.633	0.165		
Sub-Total (2)						0.000	0.000	1.121					**1.072**	**0.049**	**4.357**
3	GULBARGA-I	V.K. SALAGAR	33/11KV	1X5MVA	F6 Mudadga			2.915	63	Apchand Village 63KVA DTC	5.154	5.524	0.370		
									63	Apchand Village Near Bellur Land 63KVA DTC	0.022	0.123	0.100		
									63	Hodal Village Near Basavanna Temple 63KVA DTC	0.011	0.112	0.101		
									100	Hodal Village Near Kalkeri House 100KVA DTC	0.001	0.275	0.274		
									25	Srichand Village Near Ashok Patil House 25KVA DTC	0.026	0.031	0.005		
									100	Srichand Village Near Pintu Hotel 100KVA DTC	9.355	9.640	0.285		
									63	Srichand Village Near Premanath Biredar Land 63KVA	0.012	0.098	0.086		
									25	Srichand Village SC Area 25KVA DTC	0.069	0.074	0.006		
									25	Madaki Village Airtel Tower 25KVA DTC	0.025	0.037	0.012		
									100	Madaki Village Near Hanuman Temple 100KVA DTC	4.911	5.427	0.516		
									63	Madaki Village SC Area and W/S 63KVA DTC	0.030	0.141	0.111		
									100	Muddadga Village 100KVA DTC	12.043	12.412	0.370		
									25	Muddudaga Village Airtel Tower 25KVA DTC	0.021	0.044	0.022		
									63	Muddudaga Village Govt Priamary School 63KVA DTC	0.054	0.086	0.031		
									63	Muddudaga Village Laxmikant Parelal 63KVA DTC	0.062	0.136	0.074		
									25	Muddudaga Village Near Muradi Road W/S 25KVA DTC	0.007	0.016	0.009		
									100	Muradi Village 100KVA DTC	6.044	6.455	0.411		
Sub-Total (3)						0.000	0.000	2.915					**2.784**	**0.131**	**4.500**

Sl. No.	Name of Division	Name of PSS	Voltage Level	PTR Capacity in MVA	Name of Outgoing 11 kV Feeder	A	B	C=B-A	Distribution Transformer Capacity in KVA/Bulk	Distribution Transformer Location/ Code	D	E	F=E-D	G=C-∑F	% of 11 kV Loss w.r.t. Input Energy
						Initial Meter Reading at 11 kV side of PSS (LU)	Final Meter Reading at 11 kV side of PSS (LU)	Energy Consumption at 11 kV Outgoing Meter at source end during interval in LU			Initial Meter Reading at LT side of DTR (LU)	Final Meter Reading at LT side of DTR (LU)	Energy Consumption at Destination end during interval in LU	11 kV Line Loss in LU	
4	GULBARGA-I	11 0 KV	110/11 kV	2X10+1X20	Madyal			3.018	100	Bennisiroor Village Near Lavate Land 100KVA DTC	0.011	0.257	0.246		
									100	Bennisiroor Village Near Pandurang Paltil Land 100KVA	0.651	0.969	0.317		
									63	Bennisiroor Village Railya Qurters 63KVA DTC	0.025	0.186	0.161		
									25	Bennisiroor Village W/S 25 KVA DTC	0.002	0.025	0.022		
									25	Bennisiroor Village Near Nagaralli House 25KVA DTC	0.042	0.049	0.007		
									63	Madiyal Village Kulakarani Land 63KVA DTC	0.012	0.122	0.110		
									25	Madiyal Village Near Airtel Tower 25KVA DTC	0.029	0.042	0.013		
									63	Madiyal Village Near Ambabavani Temple 25KVA DTC	0.126	0.280	0.154		
									63	Madiyal Village Near Angandi Land 63KVA DTC	0.088	0.099	0.012		
									100	Madiyal Village Near BSNL Office 100KVA DTC	9.044	9.443	0.399		
									63	Madiyal Village Near Duden Open Will 63KVA DTC	0.359	0.487	0.128		
									25	Madiyal Village Near Govt Hospital 25KVA DTC	0.168	0.175	0.007		
									63	Madiyal Village Near Kalashetty Land 63KVA DTC	0.117	0.140	0.022		
									100	Madiyal Village Near Kulali Station Banada Halla 100KVA	0.078	0.388	0.310		
									63	Madiyal Village Near Mallikarjun Temple 63KVA DTC	0.565	0.745	0.179		
									100	Madiyal Village Near Patty Samil 100KVA DTC	0.088	0.423	0.335		
									100	Madiyal Village Near R Tukani House 100KVA DTC	0.268	0.489	0.221		
									25	Madiyal Village Near Water Well 25KVA DTC	0.007	0.013	0.006		
									63	Madiyal Village Thanda Near Khajabai Land 63KVA DTC	0.278	0.452	0.174		
Sub-Total (4)						**0.000**	**0.000**	**3.018**					**2.825**	**0.193**	**6.407**
5	GULBARGA-I	KADAGANCHI	33/11KV	1X5MVA	F4 Suntanur			1.548	25	Allur B Village SC Area 25 KVA DTC	0.010	0.020	0.009		
									25	Allur B Village Near Airtel Tower 25KVA DTC	0.146	0.157	0.011		
									100	Allur B Village Near Govt Parimary School 100KVA DTC	0.354	0.589	0.235		
									25	Allur B Village Pujari Nagar 25KVA DTC	0.521	0.606	0.085		
									100	Suntnoor Village Govt Primary School 100KVA DTC	5.309	5.640	0.331		
									63	Suntnoor Village Mahadev Nagar 25KVA DTC	0.045	0.169	0.124		
									63	Suntnoor Village Near Ladi Holla 63KVA DTC	0.086	0.222	0.136		
									100	Basawantawadi 100KVA DTC	2.542	2.796	0.254		
									100	Dharmawadi Village 100KVA DTC	8.673	8.982	0.309		
Sub-Total (5)						**0.000**	**0.000**	**1.548**					**1.494**	**0.055**	**3.536**

Sl. No.	Name of Division	Name of PSS	Voltage Level	PTR Capacity in MVA	Name of Outgoing 11 kV Feeder	A	B	C=B-A	Distribution Transformer Capacity in KVA/Bulk	Distribution Transformer Location/ Code	D	E	F=E-D	G=C-∑F	% of 11 kV Loss w.r.t. Input Energy
						Initial Meter Reading at 11 kV side of PSS (LU)	Final Meter Reading at 11 kV side of PSS (LU)	Energy Consumption at 11 kV Outgoing Meter at source end during interval in LU			Initial Meter Reading at LT side of DTR (LU)	Final Meter Reading at LT side of DTR (LU)	Energy Consumption at Destination end during interval in LU	11 kV Line Loss in LU	
6	GULBARGA-I	KADAGANCHI	33/11KV	1X5MVA	F3 Kadganchi			3.240	250	Kadaganchi Kabbin Fool 250KVA DTC	0.488	1.180	0.692		
									63	Kadaganchi Kodiyal Maddi 63KVA DTC	0.103	0.209	0.107		
									100	Kadaganchi Math 100KVA DTC	1.274	1.499	0.225		
									100	Kadaganchi Thanda 100 KVA DTC	1.071	1.359	0.288		
									63	Kadaganchi Village Budda Vihar 63KVA DTC	1.292	1.470	0.177		
									100	Kadaganchi Village Darga 100KVA DTC	0.588	0.882	0.294		
									63	Kadaganchi Village Enny Land 63KVA DTC	0.458	0.595	0.137		
									100	Kadaganchi Village Narona Road 100KVA DTC	1.268	1.499	0.232		
									25	Kadaganchi Village Near Airtel 25KVA DTC	0.194	0.220	0.026		
									100	Kadaganchi Village Near Begam 63KVA DTC	0.334	0.612	0.278		
									100	Kadaganchi Village Near Danagar 100KVA DTC	0.728	1.014	0.286		
									100	Kadaganchi Village Near Terinmela 100KVA DTC	0.220	0.543	0.324		
									25	Kadaganchi Village Near Vadafone Tower	0.214	0.242	0.028		
Sub-Total (6)						**0.000**	**0.000**	**3.240**					**3.092**	**0.148**	**4.562**
Gulbarga-I Division Total [Sub-Total (1) to (6)]								**15.492**					**14.754**	**0.738**	**4.767**
Gulbarga-I Division 11 kV side Input Energy								**545.825**	**Gulbarge-I Division 11 kV Line Loss w.r.t. Input Energy (11 kV Side)**					**26.018**	**4.767**
1	GULBARGA-II	110/33/11 kV	110/33/11	1X20+1X10	JEWARGI	488.764	492.269	3.505	63	Butnal village	4.737	4.768	0.031		
									25	Near Water supply	0.690	0.711	0.021		
									25	RGGVY	0.458	0.494	0.036		
									63	Village & IP	1.292	1.375	0.083		
									100	Village	1.977	2.123	0.147		
									63	Tanda	4.315	4.331	0.016		
									100	Hanuman Temple	6.464	6.635	0.171		
									63	RGGVY	1.137	1.155	0.017		
									25	Tower TC	0.985	0.992	0.006		
									100	Katti TC	18.964	18.988	0.023		
									25	RC Centr	1.255	1.263	0.008		
									25	RC Centr	0.157	0.165	0.008		
									25	Tower TC	6.988	6.991	0.004		
									25	Tower TC	6.453	6.464	0.011		
									25	Tower TC	2.315	2.318	0.004		
									100	Panchayat TC	3.737	3.906	0.169		
									100	Veerbhadreshwar Temple	29.618	29.829	0.212		
									63	Near Masid	11.287	11.303	0.016		

Sl. No.	Name of Division	Name of PSS	Voltage Level	PTR Capacity in MVA	Name of Outgoing 11 kV Feeder	A	B	C=B-A			D	E	F=E-D	G=C-∑F	
						Initial Meter Reading at 11 kV side of PSS (LU)	Final Meter Reading at 11 kV side of PSS (LU)	Energy Consumption at 11 kV Outgoing Meter at source end during interval in LU	Distribution Transformer Capacity in KVA/Bulk	Distribution Transformer Location/ Code	Initial Meter Reading at LT side of DTR (LU)	Final Meter Reading at LT side of DTR (LU)	Energy Consumption at Destination end during interval in LU	11 kV Line Loss in LU	% of 11 kV Loss w.r.t. Input Energy
									63	Hrizan Wada	1.138	1.155	0.017		
									25	Qtrs	0.155	0.160	0.005		
									63	Village	1.264	1.273	0.009		
									63	Bustand TC	0.309	0.317	0.008		
									100	Poojari Oni	10.947	10.998	0.052		
									25	Harijan Wada	0.570	0.586	0.016		
									25	Tanda TC	1.547	1.555	0.009		
									63	Panchayat TC	1.197	1.220	0.023		
									25	RGGVY	2.535	2.556	0.021		
									25	Hosa Area	6.138	6.150	0.012		
									63	Village	18.269	18.307	0.037		
									63	Village	3.291	3.327	0.036		
									63	Village	10.873	10.903	0.029		
									25	RGGVY	5.713	5.729	0.015		
									63	Village	3.296	3.325	0.029		
									100	Sangamnath Temple	7.407	7.584	0.177		
									25	RGGVY	6.835	6.856	0.021		
									100	Village	16.313	16.392	0.079		
									100	Shakapur road	7.403	7.468	0.064		
									100	Village	4.706	4.750	0.043		
									25	RGGVY	0.698	0.720	0.022		
									63	Village	0.475	0.495	0.020		
									100	School TC	18.974	19.017	0.044		
									100	Rachappa	0.377	0.642	0.264		
									100	Hanuman temple TC	1.793	1.937	0.144		
									100	Sathling Temple	0.650	0.893	0.243		
									100	Bhavi TC	1.847	1.994	0.146		
									63	Ambedkar	9.871	9.904	0.033		
									25	Bhojappa Temple TC	6.753	6.768	0.015		
									63	Bustand TC	10.629	10.672	0.043		
									100	Maremma temple	17.813	17.996	0.184		
									100	Mardagi road	2.093	2.237	0.144		
									63	Pujari oni	1.063	1.086	0.023		
									25	Airtel Tower	0.268	0.286	0.019		
									25	Biral road	1.679	1.694	0.015		
									63	Village	10.280	10.322	0.043		

Sl. No.	Name of Division	Name of PSS	Voltage Level	PTR Capacity in MVA	Name of Outgoing 11 kV Feeder	A	B	C=B-A	Distribution Transformer Capacity in KVA/Bulk	Distribution Transformer Location/ Code	D	E	F=E-D	G=C-∑F	% of 11 kV Loss w.r.t. Input Energy
						Initial Meter Reading at 11 kV side of PSS (LU)	Final Meter Reading at 11 kV side of PSS (LU)	Energy Consumption at 11 kV Outgoing Meter at source end during interval in LU			Initial Meter Reading at LT side of DTR (LU)	Final Meter Reading at LT side of DTR (LU)	Energy Consumption at Destination end during interval in LU	11 kV Line Loss in LU	
									63	School TC	9.871	9.894	0.023		
									100	Village	4.130	4.278	0.147		
									63	Village	12.379	12.450	0.071		
									25	Village	0.544	0.560	0.016		
Sub-Total (1)						**488.764**	**492.269**	**3.505**					**3.343**	**0.163**	**4.641**
2	GULBARGA-II	Bilwara	33/11KV	2X5MVA	Bilwara	137.012	138.874	1.863	25	Amarkhed Thanda 25 KVA	0.365	0.379	0.013		
									25	Amarkhed Thanda 25 KVA	0.260	0.281	0.021		
									25	Balbatti SC Area 25 KVA	2.546	2.561	0.015		
									25	Bilawara	0.035	0.039	0.004		
									25	Chigaralli IBP Pump 25 KVA	0.126	0.136	0.010		
									25	Ijeri Reliance Tower 25 KVA	0.067	0.072	0.005		
									25	Ijeri Near Darga WS 25 KVA	2.599	2.607	0.008		
									25	Jamakanddi Village Thand 25 KVA TC	3.691	3.701	0.010		
									25	Shivapur Thanda 25 KVA	2.613	2.617	0.003		
									25	Kodchi Village 25 KVA	5.969	5.981	0.012		
									25	Lakhanapur Village 25 KVA	0.626	0.636	0.010		
									25	Mallabad Monesh Saw Mill 25 KVA	6.329	6.338	0.010		
									25	Mallabad Village 25 KVA	6.985	7.007	0.021		
									25	Mangalora Village TC	0.544	0.549	0.005		
									25	Maradgi SM Village 25 KVA TC	2.470	2.479	0.009		
									25	Nandahalli Tawar 25 KVA	0.547	0.557	0.010		
									25	Neradgi Village 25 KVA TC	6.429	6.436	0.007		
									25	Padadalli Village 25 KVA TC	0.216	0.223	0.007		
									25	Sathkhed 25 kva tc	2.148	2.157	0.010		
									63	Anajagi Viallage 63 KVA TC	0.643	0.674	0.031		
									63	Balbatti Near Kere 63KVA	1.138	1.202	0.064		
									63	Balbatti Thanda 63 KVA	5.179	5.224	0.045		
									63	Bilwar Village New Area 63 KVA TC	1.310	1.339	0.029		
									63	Chigaralli Pump 63 KVA	19.709	19.729	0.020		
									63	Chigaralli Village 63 KVA	1.124	1.144	0.020		
									63	Jamakhandi Village 63 KVA Tc	4.932	4.941	0.009		
									63	Ijeri Endra nagar 63 KVA TC	1.318	1.342	0.024		
									63	Ijeri Kaman 63 kva tc	0.518	0.538	0.020		
									63	Ijeri Village	0.544	0.587	0.043		
									63	Jamakhandi Village 63 KVA Tc	17.590	17.610	0.019		

Sl. No.	Name of Division	Name of PSS	Voltage Level	PTR Capacity in MVA	Name of Outgoing 11 kV Feeder	A	B	C=B-A	Distribution Transformer Capacity in KVA/Bulk	Distribution Transformer Location/ Code	D	E	F=E-D	G=C-∑F	% of 11 kV Loss w.r.t. Input Energy
						Initial Meter Reading at 11 kV side of PSS (LU)	Final Meter Reading at 11 kV side of PSS (LU)	Energy Consumption at 11 kV Outgoing Meter at source end during interval in LU			Initial Meter Reading at LT side of DTR (LU)	Final Meter Reading at LT side of DTR (LU)	Energy Consumption at Destination end during interval in LU	11 kV Line Loss in LU	
									63	Kadyapur Village 63 Gvp	0.519	0.548	0.028		
									63	Kodchi Village 63 KVA	4.292	4.334	0.043		
									63	Koonnur Thand Village 63 KVA Tc	4.916	4.935	0.020		
									63	Lakhanapur Village 63 KVA	4.291	4.312	0.020		
									63	Mangalora Village 63 KVA TC	5.175	5.198	0.023		
									63	Maradgi SM Village 63 KVA TC	4.316	4.335	0.020		
									63	Nandahalli IP Set 63 KVA	1.097	1.169	0.073		
									63	Nandi Halli Viallage 63 KVA TC	19.706	19.724	0.017		
									63	Neradgi Village 63 KVA TC	12.431	12.446	0.016		
									63	Padadalli Village 63 KVA Tc	0.789	0.810	0.021		
									100	Amarkhed Village 100 KVA	0.709	0.789	0.079		
									100	Balbatti Village 100 KVA	7.379	7.458	0.079		
									100	Halagadla	0.023	0.179	0.156		
									100	Ijeri Draga 100KVA TC	6.950	6.979	0.029		
									100	Ijeri hospistel 100 kva tc	19.643	19.673	0.029		
									100	Ijeri Matha 100 KVA TC	1.964	1.975	0.011		
									100	Ijeri Shanappa 100 KVA	6.947	7.154	0.206		
									100	Kachoor Village 100 KVA	0.737	0.856	0.119		
									100	Mallabad Village 100 KVA	6.446	6.597	0.151		
									100	Gescom Office.100 TC	6.944	7.073	0.129		
Sub-Total (2)							**138.874**	**1.863**					**1.782**	**0.081**	**4.361**
3	GULBARGA-II	110KV Chittapur	110/11KV	2X100+2X10	Railway Station	172.310	177.654	5.344	25	Ashraya I	1.779	1.790	0.011		
									25	Ashraya II	1.118	1.132	0.014		
									25	Ashraya III	1.743	1.753	0.010		
									25	Ashraya IV	0.991	1.037	0.046		
									25	Ashraya V	0.057	0.062	0.005		
									25	Ashraya Colony Giremma	1.402	1.433	0.031		
									25	Ashraya Colony MUSS	0.838	0.897	0.059		
									25	Relience Ashraya Colony	0.530	0.534	0.004		
									250	GESCOM Officer	20.640	21.145	0.505		
									25	Airtel SBH	0.024	0.030	0.006		
									63	Tippayya Chowdry	2.368	2.399	0.031		
									63	Nagavi Temple	0.931	0.940	0.009		
									100	Khabarstan	16.611	16.861	0.250		
									100	Cinema Theater	11.349	11.558	0.209		

Sl. No.	Name of Division	Name of PSS	Voltage Level	PTR Capacity in MVA	Name of Outgoing 11 kV Feeder	A	B	C=B-A	Distribution Transformer Capacity in KVA/Bulk	Distribution Transformer Location/ Code	D	E	F=E-D	G=C-∑F	% of 11 kV Loss w.r.t. Input Energy
						Initial Meter Reading at 11 kV side of PSS (LU)	Final Meter Reading at 11 kV side of PSS (LU)	Energy Consumption at 11 kV Outgoing Meter at source end during interval in LU			Initial Meter Reading at LT side of DTR (LU)	Final Meter Reading at LT side of DTR (LU)	Energy Consumption at Destination end during interval in LU	11 kV Line Loss in LU	
									25	Aritel Nagavi Chowek	0.054	0.059	0.005		
									100	Basawanagar	5.884	5.994	0.110		
									100	Azamkhan II	0.237	0.479	0.242		
									100	Azamkhan I	14.040	14.179	0.139		
									25	Tata Tower Police Station	1.045	1.049	0.004		
									63	33KV MUSS Old	0.654	0.897	0.242		
									63	33KV Old MUSS OPP.	2.556	2.787	0.231		
									100	Telephone Exchange	9.762	9.916	0.154		
									250	Tahsil Office	6.124	6.762	0.638		
									25	Relience Tower N.E.S School	1.650	1.681	0.031		
									63	Basaweshwar School	13.469	13.828	0.359		
									250	Dattatrayya	7.044	7.618	0.574		
									63	New Station Tanda	12.867	13.112	0.246		
									63	Station Tanda	10.872	11.115	0.244		
									250	Bazaar	31.200	31.807	0.606		
									100	Railway Station	6.137	6.229	0.092		
Sub-Total (3)								**5.344**					**5.106**	**0.238**	**4.458**
Gulbarga-II Division Total [Sub-Total (1) to (3)]								**10.712**					**10.230**	**0.482**	**4.501**
Gulbarge-II Division 11 kV side Input Energy								**189.575**	**Gulbarge-II Division 11 kV Line Loss w.r.t. Input Energy (11 kV Side)**					**8.533**	**4.501**
Gulbarga Circle 11 kV side Input Energy								**1233.046**	**Gulbarga Circle 11 kV Line Loss w.r.t. Total Input Energy (11 kV side)**					**62.899**	**5.101**

11 kV LINE LOSS ASSESSMENT
OF
CHIKKODI CIRCLE
IN
KARNATAKA STATE

STUDY ON COMPONENT-WISE AT&C LOSSES ASSESSMENT FOR THE STATE OF KARNATAKA

C) 11 KV LINE LOSS ASSESSMENT DETAIL OF CHIKKODI CIRCLE

Sl. No.	Name of Division	Name of PSS	Voltage Level	PTR Capacity in MVA	Name of Out going 11 KV feeder	A	B	C=B-A	Distribution Transformer Capacity in KVA/Bulk	Distribution Transformer Location/ Code	D	E	F=E-D	G=C-∑F	% of 11 kv loss wrt input energy
						Initial meter reading at 11 KV side of PSS (LU)	Final meter reading at 11 KV side of PSS (LU)	Energy consumption at 11KV outgoing meter at source end during interval in LU			Initial meter reading at LT side of DTR (U)	Final meter reading at LT side of DTR (U)	Energy consumption at destination end during interval in LU	11 KV Line loss in LU	
1	Atahani	110/33/11KV MUSS ATHANI	33/11KV	4X20	F -2 Crusher	445.01	445.66	0.65	63	RAM GADIWADDAR			0.05		
									63	JADHAV STONE CRUSHERS			0.04		
									63	GURU GADIWADDER			0.02		
									100	S.R GULAPPANAVR			0.05		
									25	SHEDBALE TC			0.01		
									100	SHREE STONE CRUSHER			0.04		
									63	BIRADAR STONE			0.06		
									250	TARADE STONE CURSHER			0.15		
									63	M.M GULAPPANAVAR			0.05		
									250	BALLIGERI WATER SUPPLY			0.12		
									63	JAB GOUDAR			0.04		
Sub-Total -1						**445.01**	**445.66**	**0.65**					**0.62**	**0.03**	**4.63**
2	Atahani	220/110/11 KV	110/11KV	1X10	11KV F-3 HBC	86.23	88.60	2.38	25	AARODHNAGAR	32940.00	34810.40	0.02		
									25	SOUDAGAR TC	8098.20	8654.50	0.01		
									63	MILLENIUM STARCH FACTORY	7498.20	82354.50	0.75		
									250	MODERN DAIRY (HT 31)	36789.20	59349.20	0.23		
									25	GASTI PLOT	3461.20	3995.30	0.01		
									100	SIGMA TYRE	644010.00	661120.00	0.17		
									100	TMC WATER FILTER	651540.00	661120.00	0.10		
									63	MICROWAVE TOWER	54321.70	58963.30	0.05		
									25	DRAKSHI GARAGE	954321.70	954879.40	0.01		
									25	BAJANTRI GARAGE	19080.00	19920.00	0.01		
									25	KADOLI GARAGE	40190.00	42490.00	0.02		
									25	NANDI AGRO	8460.00	9610.00	0.01		
									25	KADAM TC	41280.00	42780.00	0.02		
									25	HERO HONDA SHOW ROOM	1245.80	1938.10	0.01		
									63	KUMBAR STONE CRUSHER	58220.00	62960.00	0.05		
									25	MADARASA	14070.00	14350.00	0.00		
									25	ASKI PETROL BUNK	7867.50	8320.00	0.00		
									100	ALIBADI TC	33870.00	35820.00	0.02		
									100	HBC TC	642840.00	644854.50	0.02		
									100	RAYARMATH TC	335550.00	352530.00	0.17		
									63	NADGOUDA EYE HOSPITAL	13220.00	14000.00	0.01		

Sl. No.	Name of Division	Name of PSS	Voltage Level	PTR Capacity in MVA	Name of Out going 11 KV feeder	A	B	C=B-A	Distribution Transformer Capacity in KVA/Bulk	Distribution Transformer Location/ Code	D	E	F=E-D	G=C-∑F	% of 11 kv loss wrt input energy
						Initial meter reading at 11 KV side of PSS (LU)	Final meter reading at 11 KV side of PSS (LU)	Energy consumption at 11KV outgoing meter at source end during interval in LU			Initial meter reading at LT side of DTR (U)	Final meter reading at LT side of DTR (U)	Energy consumption at destination end during interval in LU	11 KV Line loss in LU	
									25	SWAMI PLOT TC	69875.80	70213.50	0.00		
									63	PANDIT RAO PLOT 1	91460.00	96480.00	0.05		
									25	PANDIT RAO PLOT 2	5432.80	5912.70	0.00		
									100	RAJPUT TC	358650.00	369429.30	0.11		
									25	MAHAJAN COMPLEX	34689.30	35815.30	0.01		
									100	MAHAJAN 1	424890.00	446490.00	0.22		
									63	MAHAJAN 2	125720.00	131500.00	0.06		
									100	MAHAJAN 3	21345.70	25486.40	0.04		
									63	BASAVNAGAR	126020.00	131720.00	0.06		
									25	INDUS TOWER	1279.00	2246.76	0.01		
									25	TALUK PANCHAYAT	3492.30	4010.10	0.01		
									63	CHOUGALA HOSPITAL TC	17920.00	18940.00	0.01		
									63	KORAN MATH TC	9040.00	9600.00	0.01		
									25	SAVADKAR PETROL BUNK	4389.30	4952.80	0.01		
									63	HUTATMA MILK DAIRY	34567.20	38956.90	0.04		
Sub-Total -2						**86.23**	**88.60**	**2.38**					**2.29**	**0.09**	**3.72**
3	Atahani	220/110/11 KV	110/11KV	1X10	11 KV F-4 Bus Stand	115.62	119.59	3.97	25	VODAFONE TOWER	32163.40	32789.30	0.01		
									100	LIC Tc	407160.00	419586.80	0.12		
									100	MALI HOSPITAL	576510.00	614430.00	0.38		
									25	M S QUIPPO TOWER	47894.20	48721.60	0.01		
									100	PANGI HOSPITAL	486660.00	509970.00	0.23		
									250	AMBEDKAR CIRCLE	512560.00	559360.00	0.47		
									25	RELIANCE TOWER	76542.70	77351.90	0.01		
									100	BUS STAND TC	218130.00	230910.00	0.13		
									25	PANGI DENTAL TC	74321.60	74995.60	0.01		
									63	HUTATMA DAIRY	23876.10	32341.90	0.08		
									100	LAXMI NARAYAN	651540.00	679230.00	0.28		
									63	BOMBAY TC	35200.00	43900.00	0.09		
									63	KANAK NAGAR	66340.00	74500.00	0.08		
									25	KANAK NAGAR 2	5580.00	6080.00	0.01		
									63	DANGE PLOT	358300.00	370420.00	0.12		
									25	AIRTEL TOWER(SHANKAR NAGAR)	14673.70	15213.50	0.01		
									100	SHANKAR NAGAR	54375.80	69892.80	0.16		
									250	KUMBAR BHAVI	666240.00	716000.00	0.50		
									63	SWAMI COLLECTIONS	87623.10	95231.40	0.08		
									63	SANADI GARAGE	101520.00	107920.00	0.06		
									63	BHUTALE COMPLEX	25320.00	38960.00	0.14		

Sl. No.	Name of Division	Name of PSS	Voltage Level	PTR Capacity in MVA	Name of Out going 11 KV feeder	A	B	C=B-A	Distribution Transformer Capacity in KVA/Bulk	Distribution Transformer Location/ Code	D	E	F=E-D	G=C-∑F	% of 11 kv loss wrt input energy
						Initial meter reading at 11 KV side of PSS (LU)	Final meter reading at 11 KV side of PSS (LU)	Energy consumption at 11KV outgoing meter at source end during interval in LU			Initial meter reading at LT side of DTR (U)	Final meter reading at LT side of DTR (U)	Energy consumption at destination end during interval in LU	11 KV Line loss in LU	
									250	SANKARATTI HOSPITAL(HT)	75432.70	112897.80	0.37		
									250	TOGARIMATTI TC	440960.00	480321.30	0.39		
									63	RENUKA DIAGNOSTICS	45678.90	52986.90	0.07		
									25	SAVADKAR PETROL BUNK	2345.80	2695.20	0.00		
Sub-Total -3								**3.97**					**3.80**	**0.17**	**4.36**
4	Athani	110/33/11KV	110/33/11kv	4X20	ATHANI-I	505.20	507.79	2.59	100	KEB QUARTERS	244050.00	256290.00	0.12		
									100	SHIVAYOGI NAGAR	249600.00	263340.00	0.14		
									25	GUMATI TC	32940.00	34810.40	0.02		
									63	BHUTALI OFFICE	64240.00	65740.00	0.02		
									100	GEJJI PLOT TC	385890.00	399150.00	0.13		
									63	SUNNADA BATTI	21600.00	22860.00	0.01		
									63	HANJI STONE CRUSHER	3421.70	3951.60	0.01		
									250	DURGA STONE CRUSHER	654328.50	689732.20	0.35		
									63	VANKORE STONE CRUSHER	6543.90	8932.10	0.02		
									63	RADHIKA MILK DIARY	18640.00	20640.00	0.02		
									63	BHUTALE ICE FACTORY	139600.00	145140.00	0.06		
									25	S R GARAGE	2436.78	2984.51	0.01		
									25	DURADHARSHAN	954321.70	954879.40	0.01		
									25	CHUNMURI ITI CLG	2345.87	2690.80	0.00		
									100	GAVISIDDANAMADI 1	354900.00	359789.30	0.05		
									63	RUDHRA BHOOMI	65428.54	69851.60	0.04		
									63	NANDAGAON SAW MILL	763040.00	769200.00	0.06		
									100	GAVISIDDANMADDI 2	236370.00	252600.00	0.16		
									250	MOMIN TC	475360.00	519794.00	0.44		
									250	250 NALABAND	3587543.80	3639753.60	0.52		
									100	MAMMADEVI TC	403590.00	415680.00	0.12		
									100	LIDAKAR COLONY	169140.00	181020.00	0.12		
									63	PUNIT BAR	59660.00	63560.00	0.04		
Sub-Total -4								**2.59**					**2.47**	**0.11**	**4.43**
5	Athani	110/33/11KV	110/33/11kv	4X20	ATHANI-II	630.21	636.02	5.81	100	HOLIKATTI GALLI	436560.00	456630.00	0.20		
									25	AMAN TRADERS	112350.00	112790.00	0.00		
									25	INDUS TOWER(NEAR 110)	135098.70	135989.80	0.01		
									25	JOSHI PETROL BUNK(MIRAJ ROAD)	16020.00	16490.00	0.00		
									25	JUDGE QUARTERS	19780.00	20670.00	0.01		
									100	POLICE QUARTERS	18570.00	25230.00	0.07		
									63	IB TC	65432.80	79876.89	0.14		

Sl. No.	Name of Division	Name of PSS	Voltage Level	PTR Capacity in MVA	Name of Out going 11 KV feeder	A	B	C=B-A	Distribution Transformer Capacity in KVA/Bulk	Distribution Transformer Location/ Code	D	E	F=E-D	G=C-∑F	% of 11 kv loss wrt input energy
						Initial meter reading at 11 KV side of PSS (LU)	Final meter reading at 11 KV side of PSS (LU)	Energy consumption at 11KV outgoing meter at source end during interval in LU			Initial meter reading at LT side of DTR (U)	Final meter reading at LT side of DTR (U)	Energy consumption at destination end during interval in LU	11 KV Line loss in LU	
									100	BASINGEPLOT	54328.76	62345.89	0.08		
									100	HUDACO COLONY 1	72270.00	76290.00	0.04		
									100	HUDACO COLONY 2	43256.81	54895.34	0.12		
									25	YAKKIHALLIMATH	5498.40	5632.43	0.00		
									100	GUNDA PLOT 1	184396.60	197832.20	0.13		
									100	GUNDA PLOT 2	14760.00	15660.00	0.01		
									100	GUNDA PLOT 3	2490.00	2820.00	0.00		
									100	GUNDA PLOT 4	48347.32	49869.50	0.02		
									100	GUNDA PLOT 5	234521.60	238531.50	0.04		
									100	GUNDA PLOT 6	2673.70	9581.90	0.07		
									100	GUNDA PLOT 7	38765.80	42831.20	0.04		
									100	GUNDA PLOT 8	79854.80	98769.56	0.19		
									25	SAIBAR JATH ROAD	5478.30	5923.40	0.00		
									25	INDIAN OIL JATH ROAD	93211.60	93534.50	0.00		
									100	NALBAND GALLI	524580.00	549570.00	0.25		
									100	HESCOM OFFICE	65438.54	93584.40	0.28		
									25	HESCOM QUARTERS	7437.90	7983.40	0.01		
									63	HESCOM TC-REPAIR	36520.00	39080.00	0.03		
									100	SHANTHI SAGAR HOTEL	230430.00	243150.00	0.13		
									63	CHAINE HOSPITAL	10900.00	11560.00	0.01		
									100	SIDDESWAR AGASI	687570.00	719940.00	0.32		
									250	OLD TMC S S ROAD	1269440.00	1324480.00	0.55		
									250	BHUDAWARPETH TC	438640.00	455920.00	0.17		
									63	MARULSHANKAR TC	232460.00	242740.00	0.10		
									25	NADAF OIL MILL	21380.00	22880.00	0.02		
									100	HANUMAN TEMPLE	363900.00	383670.00	0.20		
									100	SHALASANKIRAN TC	145230.00	156849.00	0.12		
									63	CANARA BANK TC	4321.70	5893.20	0.02		
									100	BSNL OFFICE	120810.00	126930.00	0.06		
									250	KACHERI TC	15432.40	26438.10	0.11		
									150	DEREMAL TC	65438.70	65898.40	0.00		
									250	250 MIRAJ ROAD NALABAND	64532.86	98654.20	0.34		
									25	TATA MOTORS	10870.00	11600.00	0.01		
									63	NAIK HOSPITAL	39580.00	40880.00	0.01		
									63	JA COMPLEX	116260.00	121560.00	0.05		
									25	COURT	15670.00	16440.00	0.01		
									63	JA BA COLLEGE	7060.00	7460.00	0.00		

Sl. No.	Name of Division	Name of PSS	Voltage Level	PTR Capacity in MVA	Name of Out going 11 KV feeder	A	B	C=B-A	Distribution Transformer Capacity in KVA/Bulk	Distribution Transformer Location/ Code	D	E	F=E-D	G=C-∑F	% of 11 kv loss wrt input energy
						Initial meter reading at 11 KV side of PSS (LU)	Final meter reading at 11 KV side of PSS (LU)	Energy consumption at 11KV outgoing meter at source end during interval in LU			Initial meter reading at LT side of DTR (U)	Final meter reading at LT side of DTR (U)	Energy consumption at destination end during interval in LU	11 KV Line loss in LU	
									250	KATTI TC	946320.00	988960.00	0.43		
									25	DESAI PETROL PUMP(MIRAJ ROAD)	5432.80	5852.13	0.00		
									63	DESHPANDE NAGAR	2543.76	2895.46	0.00		
									25	MILK DAIRY MAKANDAR	65432.80	65512.53	0.00		
									63	ASKI TYRE REMOLD	40780.00	43660.00	0.03		
									63	RELIANCE PETROL BUNK	54321.60	58415.30	0.04		
									63	EIGLI GARAGE	34568.90	38796.00	0.04		
									63	SANKRATTI TYRE REMOLD	45321.80	48765.32	0.03		
									100	BHAJI MARKET	249090.00	258290.00	0.09		
									25	INDUS TOWER(MARATHGALLI)	432.80	510.54	0.00		
									100	KAVERI DHABA	432689.00	452734.00	0.20		
									63	SACHIN PETROL BUNK	14583.00	15978.60	0.01		
									100	DRAKSHI BELEGAR TC	3214.76	4894.50	0.02		
									100	JIDDI STONE CRUSHER	24720.00	24870.00	0.00		
									100	PATIL ICE FACTORY	206970.00	213570.00	0.07		
									100	TELEPHONE EXCHANGE(HT)	7659.80	10265.76	0.03		
									100	TELEPHONE EXCHANGE(HT)	5432.11	67542.89	0.62		
Sub-Total -5								**5.81**					**5.60**	**0.21**	**3.65**
Athani Division Total (Sub-Total 1 to 5)								**15.39**					**14.77**	**0.62**	**4.01**
Athani Division 11 kV side Input Energy								**323.05**	**Athani Division 11 KV line loss wrt total input energy (11KV side)**					**12.97**	**4.01**
1	Chikkodi	110/33/11 KVA	33/11KV	2x20+2X10	11 KV Sadalga Feeder	498.90	502.52	3.61	63	KEB Colony	86339.00	88353.00	0.02		
									63	Gumpa	231152.00	237522.00	0.06		
									10	Urdu School	124398.00	132696.00	0.08		
									63	Bajirao Plot	233588.00	236403.00	0.03		
									25	A. N. Patil	468258.00	472447.00	0.04		
									25	Udaganve	76671.00	79683.00	0.03		
									25	Ashray-I	41950.00	42683.00	0.01		
									25	Ashray-II	7934.00	12554.00	0.05		
									63	Ashray-III	228750.00	231212.00	0.02		
									25	Kannada School	364984.00	371434.00	0.06		
									100	Samagar	840654.00	848889.00	0.08		
									100	Bhoje	861390.00	861390.00	0.10		
									63	Datta Chowk	1052928.00	1064127.00	0.11		
									63	Badiger	748542.00	757498.00	0.09		
									100	Thaloba	66213.00	87804.00	0.22		
									100	Janata Plot	1012881.00	1025121.00	0.12		

Sl. No.	Name of Division	Name of PSS	Voltage Level	PTR Capacity in MVA	Name of Out going 11 KV feeder	A	B	C=B-A	Distribution Transformer Capacity in KVA/Bulk	Distribution Transformer Location/ Code	D	E	F=E-D	G=C-∑F	% of 11 kv loss wrt input energy
						Initial meter reading at 11 KV side of PSS (LU)	Final meter reading at 11 KV side of PSS (LU)	Energy consumption at 11KV outgoing meter at source end during interval in LU			Initial meter reading at LT side of DTR (U)	Final meter reading at LT side of DTR (U)	Energy consumption at destination end during interval in LU	11 KV Line loss in LU	
									63	Marajakke	499032.00	500412.00	0.01		
									100	Saw mill **Ckt-01**	820713.00	830817.00	0.10		
										Ckt-02	1148727.00	1155834.00	0.07		
									63	Hospital	353310.00	355208.00	0.02		
									100	Water Supply	1096746.00	1119696.00	0.23		
									25	BSNL	85937.00	89964.00	0.04		
									25	Prakash Nagar	39171.00	43811.00	0.05		
									63	Bagadi	336526.00	341586.00	0.05		
									100	Darga	176697.00	184107.00	0.07		
									100	Mane	407649.00	424989.00	0.17		
									25	Desai	429651.00	431724.00	0.02		
									25	Samboje	24796.00	25079.00	0.00		
									25	Patil/Gavali	39105.00	39290.00	0.00		
									100	Jack well	2233794.00	2266887.00	0.33		
									63	Gundakalle	478696.00	487264.00	0.09		
									100	Hanuman	205476.00	227973.00	0.22		
									63	Airtel	96712.00	4473.00	0.08		
									25	Spice	49531.00	52602.00	0.03		
									63	APMC	143254.00	143254.00	0.00		
									100	Police Colony	94205.00	94850.00	0.01		
									25	Guraling Mane	54356.00	56154.00	0.02		
									100	TPC Complex	943716.00	952701.00	0.09		
									100	Auxiliary	4880.00	7026.00	0.02		
Sub-Total -1						**498.90**	**502.52**	**3.61**					**2.86**	**0.75**	**20.70**
2	Chikkodi	110/11 KV MUSS	110/11KV	2X10	Industrial	878.97	882.74	3.77	100	AKKOD ROAD	151566.60	160026.60	0.08		
									63	AKKOL ROAD	71680.00	76909.00	0.05		
									63	INDUSTRIAL ESTATE	7735.00	10173.20	0.02		
									63	AKKOL ROAD	167091.00	176906.80	0.10		
									63	AKKOL ROAD	353310.00	355208.00	0.02		
									63	INDUSTRIAL ESTATE	21900.80	23622.80	0.02		
									63	INDUSTRIAL ESTATE	91460.00	96480.00	0.05		
									100	AKKOL ROAD	5432.70	11898.80	0.06		
									25	INDUSTRIAL ESTATE	10870.00	11600.00	0.01		
									63	INDUSTRIAL ESTATE	10112.00	10955.20	0.01		
									63	INDUSTRIAL ESTATE	75453.60	79908.60	0.04		
									100	AKKOL ROAD	8765.87	19864.80	0.11		
									100	INDUSTRIAL ESTATE	20411.70	29149.70	0.09		

Sl. No.	Name of Division	Name of PSS	Voltage Level	PTR Capacity in MVA	Name of Out going 11 KV feeder	A	B	C=B-A	Distribution Transformer Capacity in KVA/Bulk	Distribution Transformer Location/ Code	D	E	F=E-D	G=C-∑F	% of 11 kv loss wrt input energy
						Initial meter reading at 11 KV side of PSS (LU)	Final meter reading at 11 KV side of PSS (LU)	Energy consumption at 11KV outgoing meter at source end during interval in LU			Initial meter reading at LT side of DTR (U)	Final meter reading at LT side of DTR (U)	Energy consumption at destination end during interval in LU	11 KV Line loss in LU	
									100	AKKOL ROAD	7634.80	111985.80	1.04		
									100	INDUSTRIAL ESTATE	45689.70	58762.54	0.13		
									100	INDUSTRIAL ESTATE	58798.20	72972.50	0.14		
									100	AKKOL ROAD	178005.30	197518.20	0.20		
									100	INDUSTRIAL ESTATE	138847.80	149686.80	0.11		
									100	INDUSTRIAL ESTATE	65925.30	79256.50	0.13		
									63	INDUSTRIAL ESTATE	261004.00	268392.00	0.07		
									63	AMBA MARKET	119680.00	127619.60	0.08		
									25	AKKOL ROAD	468258.00	472447.00	0.04		
									100	RAMANAGAR	195227.10	206563.50	0.11		
									63	ROHIDAS NAGAR	120331.00	129817.60	0.09		
									100	SAI SHANKER NAGAR	373884.00	396013.20	0.22		
									100	SHAVANTH CALONY	382065.00	397492.00	0.15		
									25	KOLLAPUR ROAD PETROL BUNK	76543.90	76899.80	0.00		
									100	INDUSTRIAL ESTATE	249591.90	267537.60	0.18		
									100	INDUSTRIAL ESTATE	46674.90	59802.70	0.13		
									63	INDUSTRIAL ESTATE	65715.80	73036.40	0.07		
Sub-Total -2						**878.97**	**882.74**	**3.77**					**3.59**	**0.18**	**4.82**
3	Chikkodi	110/11 KV MUSS	110/11KV	2X10	MGM	1358.15	1366.07	7.92	63	AGRCULTURE FARM	30352.40	31915.40	0.02		
									100	SAKHARWADI	20411.70	24149.70	0.04		
									63	BEHIND CMC OFFICE	14036.00	15117.80	0.01		
									63	PB ROAD BYPASS	24065.20	25344.80	0.01		
									250	AZAD GALLI	694580.80	736127.20	0.42		
									100	NEAR POLICE STATION	141235.20	149800.20	0.09		
									250	BADDEGALLI	733908.00	788240.00	0.54		
									250	BAGAVAN GALLI	479424.80	519759.20	0.40		
									25	CHIKODI ROAD	80019.00	103991.10	0.24		
									100	BHIM NAGAR	379896.60	398377.50	0.18		
									63	KOLHAPUR ROAD	72361.00	75711.60	0.03		
									25	BELGAUM NAKA	76543.70	78692.40	0.02		
									100	CHATI MARKET	338143.20	357764.10	0.20		
									63	PB ROAD BYPASS	7728.20	7857.20	0.00		
									100	CHINGAONKAR GALLI	605996.40	686161.00	0.80		
									100	OLD MOTOR STAND	87654.89	90876.50	0.03		
									25	NEAR POLICE STATION	876.90	987.40	0.00		
									100	DARGA GALLI	590095.50	621887.70	0.32		
									63	DESHPANDE HOSPITEL	10151.20	11202.00	0.01		

Sl. No.	Name of Division	Name of PSS	Voltage Level	PTR Capacity in MVA	Name of Out going 11 KV feeder	A	B	C=B-A	Distribution Transformer Capacity in KVA/Bulk	Distribution Transformer Location/ Code	D	E	F=E-D	G=C-∑F	% of 11 kv loss wrt input energy
						Initial meter reading at 11 KV side of PSS (LU)	Final meter reading at 11 KV side of PSS (LU)	Energy consumption at 11KV outgoing meter at source end during interval in LU			Initial meter reading at LT side of DTR (U)	Final meter reading at LT side of DTR (U)	Energy consumption at destination end during interval in LU	11 KV Line loss in LU	
									63	DIVEKAR COLONY	14036.00	15117.80	0.01		
									100	AKKAMMADEVI KALLYAN MANTAP	765432.87	796315.47	0.31		
									100	DIWANJI GALLI	302310.00	319296.00	0.17		
									100	HARI NAGAR	299940.00	311910.00	0.12		
									100	IDGA MAIDAN	209719.80	257862.00	0.48		
									63	KHARI CORNER	3456.90	40987.20	0.38		
									100	BUDH NAGAR	26850.00	28829.40	0.02		
									100	JAMDAR PLOT	482351.70	572647.50	0.90		
									100	K L E QTRS	151683.60	161115.60	0.09		
									100	AZAD GALLI	344802.00	365190.00	0.20		
									63	ASHOK NAGAR	76543.90	85430.09	0.09		
									63	NEAR BSNL OFFICE	35346.00	37928.40	0.03		
									63	BHAJI MARKET	85636.00	91710.60	0.06		
									100	LAYFAET	54327.60	59876.87	0.06		
									100	MANE PLOT	366170.70	386260.50	0.20		
									63	RAVIWAR PETH	17880.00	18757.60	0.01		
									100	MUGALEGALLI	97420.20	103400.70	0.06		
									100	MURGOD ROAD CROSS	77140.20	80081.40	0.03		
									100	PANADE QTRS	42434.40	44504.10	0.02		
									63	PANADE QTRS	82213.80	88535.60	0.06		
									25	BASAVAN MAL	11342.00	12229.20	0.01		
									100	BELGAUM NAKA	177090.00	188060.10	0.11		
									63	POLICE QUATERS	59907.40	60980.00	0.01		
									250	HESCOM SUB DIV OFF	528852.80	574903.20	0.46		
									63	SHAKARWADI	26918.80	35588.80	0.09		
									25	SAMBAJI NAGAR VADDAR GALLI	7865.80	7945.80	0.00		
									100	SAMBAJI NAGAR	431730.00	407150.00	-0.25		
									25	MANGALWAR PETH	12598.20	13436.40	0.01		
									25	STAVANIDHI	33115.80	34899.60	0.02		
									250	SHIVJI CHOWK	85147.20	98339.20	0.13		
									100	SHIVAJI NAGAR	68457.00	72844.80	0.04		
									63	TAVATE GALLI	214516.40	225963.20	0.11		
									100	THALOBA PETH	283562.40	293857.20	0.10		
									100	TIFCO PRABHAT TALKIS	87900.00	95759.70	0.08		
Sub-Total -3						**1358.15**	**1366.07**	**7.92**					**7.59**	**0.32**	**4.08**

Sl. No.	Name of Division	Name of PSS	Voltage Level	PTR Capacity in MVA	Name of Out going 11 KV feeder	A	B	C=B-A	Distribution Transformer Capacity in KVA/Bulk	Distribution Transformer Location/ Code	D	E	F=E-D	G=C-∑F	% of 11 kv loss wrt input energy
						Initial meter reading at 11 KV side of PSS (LU)	Final meter reading at 11 KV side of PSS (LU)	Energy consumption at 11KV outgoing meter at source end during interval in LU			Initial meter reading at LT side of DTR (U)	Final meter reading at LT side of DTR (U)	Energy consumption at destination end during interval in LU	11 KV Line loss in LU	
4	Chikkodi	110/11 KV MUSS	110/11KV	2X10	POWER HOUSE	391.65	400.80	9.14	63	ASHOK NAGAR	7654.00	10232.90	0.03		
									250	ASHOK NAGAR	881975.20	980814.40	0.99		
									25	CHIKODI ROAD	6117.30	6491.80	0.00		
									63	CHIKODI ROAD	54321.80	64442.80	0.10		
									250	BUS STAND	734638.40	761799.20	0.27		
									100	ASHOK NAGAR	44593.50	45387.60	0.01		
									100	CHENNAMMA CIRCLE	44108.40	46073.10	0.02		
									63	BUS STAND	7684.40	8275.80	0.01		
									25	CHIKODI ROAD	1636.90	2100.60	0.00		
									100	GEETANJALI TALKIES	322604.10	333301.80	0.11		
									63	CHIKODI ROAD	10915.20	11639.60	0.01		
									63	ASHOK NAGAR	5437.90	5974.30	0.01		
									100	ASHOK NAGAR	76543.76	88651.70	0.12		
									100	MURGOD ROAD	251250.00	259830.00	0.09		
									100	KOTIWALE CORNER	190385.10	206669.90	0.16		
									100	CHIKODI ROAD	228921.60	241005.60	0.12		
									63	SAKHARWADI	9880.00	15460.00	0.06		
									100	MURGOD ROAD	76543.80	80876.98	0.04		
									100	HOUSABAI CALONI	264707.70	286614.60	0.22		
									100	I B	122102.70	145260.10	0.23		
									250	JATRATVES	938040.80	1002851.20	0.65		
									63	SHINTRE COLONY	123200.00	129080.00	0.06		
									100	MURGOD ROAD	14040.00	14970.00	0.01		
									63	ASHOK NAGAR	189287.20	196299.60	0.07		
									63	NEAR BUSTAND	24965.00	28537.60	0.04		
									63	ASHOK NAGAR	6079.40	6484.20	0.00		
									25	SHINTRE COLONY	6450.00	7359.00	0.01		
									250	KOTIWALE CORNER	502823.20	580041.60	0.77		
									63	KSRTC	3241.60	5854.70	0.03		
									100	KUMBAR GALLI	100200.00	125138.70	0.25		
									100	SHINTRE COLONY	65432.80	88964.76	0.24		
									500	MANGALWAR PETH	78967.98	222875.80	1.44		
									25	NEAR BUSTAND	16611.10	17908.80	0.01		
									63	MURGOD ROAD	27220.00	49020.00	0.22		
									63	CHENNAMMA CIRCLE	182113.60	189499.60	0.07		
									100	RAJASHREE TAKIS	64710.00	105530.00	0.41		
									25	SHINTRE COLONY	468258.00	472447.00	0.04		

Sl. No.	Name of Division	Name of PSS	Voltage Level	PTR Capacity in MVA	Name of Out going 11 KV feeder	A	B	C=B-A	Distribution Transformer Capacity in KVA/Bulk	Distribution Transformer Location/ Code	D	E	F=E-D	G=C-∑F	% of 11 kv loss wrt input energy
						Initial meter reading at 11 KV side of PSS (LU)	Final meter reading at 11 KV side of PSS (LU)	Energy consumption at 11KV outgoing meter at source end during interval in LU			Initial meter reading at LT side of DTR (U)	Final meter reading at LT side of DTR (U)	Energy consumption at destination end during interval in LU	11 KV Line loss in LU	
									100	HANABAR GALLI	220577.70	231417.60	0.11		
									63	HANUMAN NAGAR	67540.00	71440.00	0.04		
									100	NEAR PRAVEEN DELUX	113220.00	219412.60	1.06		
									100	CHIKODI ROAD	374499.60	398821.40	0.24		
									63	TIFFCO ASHOK NAGAR	29287.20	45166.40	0.16		
									63	CHIKODI ROAD	7654.76	9887.98	0.02		
									63	RAMPUR ROAD	79866.60	82569.80	0.03		
									100	JATRATVES	49833.90	74337.60	0.25		
									63	MURGOD ROAD	9843.76	11032.80	0.01		
Sub-Total -4						**391.65**	**400.80**	**9.14**					**8.82**	**0.33**	**3.56**
5	Chikkodi	110/11 KV MUSS	110/11KV	2X10	Stavanidhi	148.27	149.60	1.34	63	STAVANIDHI ROAD	87654.00	98765.00	0.11		
									25	AMALAZARI ROAD	52391.10	56599.90	0.04		
									63	AMALAZARI ROAD	168522.00	185277.40	0.17		
									25	AMALAZARI ROAD	21631.30	23668.20	0.02		
									25	AMALAZARI ROAD	1053.30	1264.90	0.00		
									63	GULZARBAGH PATAN	6543.90	10286.70	0.04		
									63	KURBETTI TC	8927.20	9923.80	0.01		
									100	STAVANIDHI ROAD	7543.80	22532.00	0.15		
									63	AMALAZARI ROAD	27220.00	34020.00	0.07		
									63	STAVANIDHI ROAD	58080.00	68720.00	0.11		
									100	STAVANIDHI ROAD	207812.40	230860.40	0.23		
									100	STAVANIDHI ROAD	87654.00	98765.00	0.11		
									100	STAVANIDHI ROAD	5432.89	10959.87	0.06		
									100	STAVANIDHI ROAD	34568.54	50798.80	0.16		
Sub-Total -5						**148.27**	**149.60**	**1.34**					1.27	**0.06**	**4.64**
Chikkodi Division Total [Sub-Total 1 to 5]								**25.78**					**24.14**	**1.64**	**6.36**
Chikkodi Division 11 kV side Input Energy								**365.41**	**Chikkodi Division 11 kV Line Loss w.r.t. Total Input Energy (11 kV side)**					**23.24**	**6.36**
TOTAL (Athani Div +Chikkodi Div) 11 kV side Input Energy								**688.46**	**TOTAL (Athani Div +Chikkodi Div) 11 kV Line Loss w.r.t. Total Input Energy (11 kV side)**					**36.21**	**5.26**
Raibag Division 11 kV side Input Energy								**428.02**	**Raibag Division 11 kV Line Loss w.r.t. Total Input Energy (11 kV side)**						
Chikkodi Circle 11 kV side Input Energy								**1164.28**	**Chikkodi Circle 11 kV Line Loss w.r.t. Total Input Energy (11 kV side)**					**61.23**	**5.26**

N.B. : *Initial & Final Meter Reading Values are multiplied with Meter Multiplication Factor (MF).*

LT LINE LOSS ASSESSMENT DETAIL
OF
BANGLORE SOUTH CIRCLE
IN
KARNATAKA STATE

STUDY ON COMPONENT-WISE AT&C LOSSES ASSESSMENT FOR THE STATE OF KARNATAKA

C) LT LINE LOSS DETAIL OF BANGALORE SOUTH CIRCLE

Sl. No.	Name of Division	Name of PSS	Voltage Level	Name Out going 11 KV feeder	Distribution Transformer Capacity in KVA/11KV Bulk Consumer	Distribution Transformer Location- Code/ Bulk Consumer Location	A	B	C=B-A	Consumer ID No./ Meter No.	D	E	F=E-D	G=C-∑F	% of LT Loss w.r.t Input Energy
							Initial meter reading at LT side of DTR (LU)	Final meter reading at LT side of DTR (LU)	Energy consumption at destination end during interval in LU		Initial meter reading at Consumer side (U)	Final meter reading at consumer side (U)	Energy consumption at destination end during interval in Unit	LT line loss in LU	
1	Jaynagar	P.B. NAGAR	66/11	11 JAYANAGAR FEEDER	63	TC-201/HOUSE #60 22ND CROSS 6TH BLOCK JAYANAGAR/63	13.86	13.96	0.100	1S61503	92343	94727.00	2384.00	0.006	5.76
										1S61504	32409	34252	1843.00		
										1S63162	192	256	64.00		
										1S63163	224	244	20.00		
										1S63164	89	106	17.00		
										1S63165	77	120	43.00		
										1SH57215	296	347	51.00		
										MS1S61479	38794	42336	3542.00		
										MS1SH56824	1599	1673	74.00		
										MS1SH56825	1606	1745	139.00		
										MS1SH56826	4265	4599	334.00		
										MS1SH56827	2771	2869	98.00		
										MS1SH56828	2457	2724	267.00		
										MS1SH56829	2811	2951	140.00		
										MS1SH56830	10378	10786	408.00		
SUB-TOTAL (1)													**9424.00**		
2	**JAYANAGAR**	P.B. NAGAR	66/11	11KV F-12 FEEDER	250	TC-136/OPP. URS PARTY HALL/250	11.720	11.840	0.120	1S29865	0	0	0	0.007	5.967
										1S30656	11677	11684	7		
										1S42108	21322	21322	0		
										1S43581	6932	6962	30		
										1S43582	2825	2855	30		
										1S43583	0	0	0		
										1S43584	2526	2614	88		
										1S43585	8069	8128	59		
										1S44836	9753	9784	31		
										1S49424	8714	9927	1213		
										1S62112	719	755	36		
										1SH18609	24087	24191	104		
										1SH18610	13827	13907	80		
										1SH19563	3731	4289	558		
										1SH21555	7806	7847	41		
										1SH22935	2215	2456	241		
										1SH28691	3290	3430	140		
										1SH32132	63994	64810	816		

Sl. No.	Name of Division	Name of PSS	Voltage Level	Name Out going 11 KV feeder	Distribution Transformer Capacity in KVA/11KV Bulk Consumer	Distribution Transformer Location- Code/ Bulk Consumer Location	A	B	C=B-A	Consumer ID No./ Meter No.	D	E	F=E-D	G=C-∑F	% of LT Loss w.r.t Input Energy
							Initial meter reading at LT side of DTR (LU)	Final meter reading at LT side of DTR (LU)	Energy consumption at destination end during interval in LU		Initial meter reading at Consumer side (U)	Final meter reading at consumer side (U)	Energy consumption at destination end during interval in Unit	LT line loss in LU	
										1SH34918	17238	17430	192		
										1SH36519	0	0	0		
										1SH36685	7168	7262	94		
										1SH36686	19497	19737	240		
										1SH37557	9042	9105	63		
										1SH40200	26948	27063	115		
										1SH40374	12090	12747	657		
										1SH44350	13203	13207	4		
										1SH45823	17714	17882	168		
										1SH45824	16959	17083	124		
										1SH45825	4432	4464	32		
										1SH45826	9035	9186	151		
										1SH46997	18242	18336	94		
										1SH46998	25231	25436	205		
										1SH46999	37509	38070	561		
										1SH47000	8221	8332	111		
										1SH51625	11627	11767	140		
										1SH56814	2338	2515	177		
										1SH6082	119	124	5		
										1SP3607	3199	3236	37		
										1SP4000	3657	3663	6		
										1SP5088	14368	14548	180		
										MS1S58621	6175	6280	105		
										MS1S58622	2238	2277	39		
										MS1S58623	5643	5737	94		
										MS1S58624	32271	32805	534		
										MS1S58625	21247	21326	79		
										MS1S58626	29429	30155	726		
										MS1S58627	10946	11258	312		
										MS1S58628	4864	4933	69		
										MS1S59433	301	337	36		
										MS1S59434	25630	27158	1528		
										MS1S59921	254	261	7		
										MS1S59922	5691	6598	907		
										MS1S59923	0	0	0		
										MS1S59924	707	725	18		
SUB TOTAL (2)													11284		

Sl. No.	Name of Division	Name of PSS	Voltage Level	Name Out going 11 KV feeder	Distribution Transformer Capacity in KVA/11KV Bulk Consumer	Distribution Transformer Location- Code/ Bulk Consumer Location	A	B	C=B-A	Consumer ID No./ Meter No.	D	E	F=E-D	G=C-∑F	% of LT Loss w.r.t Input Energy
							Initial meter reading at LT side of DTR (LU)	Final meter reading at LT side of DTR (LU)	Energy consumption at destination end during interval in LU		Initial meter reading at Consumer side (U)	Final meter reading at consumer side (U)	Energy consumption at destination end during interval in Unit	LT line loss in LU	
3	Jaynagar	Adugodi	66/11	11 KV F 10 FEEDER	100	TC-64/R. MOHD SHARIEFF & OTHERS	1.537	1.777	0.240	1S26141	1670	1768	98	0.013	5.605
										1S26143	7612	7726	114		
										1S26144	14231	14348	117		
										1S27072	293	484	191		
										1S27174	20049	20317	268		
										1S27623	1512	1512	0		
										1S27832	7286	7323	37		
										1S28232	6291	6329	38		
										1S28233	3151	3187	36		
										1S28234	3157	3231	74		
										1S28561	6566	6566	0		
										1S28670	2154	2192	38		
										1S28709	9076	9252	176		
										1S29093	4011	4051	40		
										1S29095	7256	7358	102		
										1S29621	8747	8753	6		
										1S29958	8877	8931	54		
										1S29959	9160	9241	81		
										1S30053	7407	7541	134		
										1S31022	337	426	89		
										1S31764	825	991	166		
										1S32460	52936	53164	228		
										1S32637	1784	1860	76		
										1S32638	12499	12648	149		
										1S32726	10029	10182	153		
										1S33546	4186	4218	32		
										1S33653	2416	2417	1		
										1S33656	8976	9057	81		
										1S33706	4620	4662	42		
										1S33707	11679	11832	153		
										1S33724	11815	11866	51		
										1S33725	7751	7867	116		
										1S33905	3038	3089	51		
										1S33990	17549	17759	210		
										1S34052	4660	4837	177		
										1S34053	1132	1147	15		
										1S34119	9407	9502	95		
										1S34121	1526	1562	36		

Sl. No.	Name of Division	Name of PSS	Voltage Level	Name Out going 11 KV feeder	Distribution Transformer Capacity in KVA/11KV Bulk Consumer	Distribution Transformer Location- Code/ Bulk Consumer Location	A	B	C=B-A	Consumer ID No./ Meter No.	D	E	F=E-D	G=C-∑F	% of LT Loss w.r.t Input Energy
							Initial meter reading at LT side of DTR (LU)	Final meter reading at LT side of DTR (LU)	Energy consumption at destination end during interval in LU		Initial meter reading at Consumer side (U)	Final meter reading at consumer side (U)	Energy consumption at destination end during interval in Unit	LT line loss in LU	
										1S34189	2101	2161	60		
										1S35194	7675	7753	78		
										1S35195	1836	1880	44		
										1S35196	8350	8456	106		
										1S35466	7720	7808	88		
										1S35596	5923	6012	89		
										1S35726	19251	19281	30		
										1S35884	4335	4367	32		
										1S36033	7775	7915	140		
										1S36243	21670	21682	12		
										1S36286	1514	1581	67		
										1S36287	727	742	15		
										1S36288	192	266	74		
										1S36351	4689	4763	74		
										1S36352	4639	4777	138		
										1S36353	3935	3956	21		
										1S37718	2830	2989	159		
										1S37755	19070	19160	90		
										1S37756	8313	8368	55		
										1S39021	4203	4228	25		
										1S39022	1769	1809	40		
										1S39070	4555	4623	68		
										1S39804	2938	3016	78		
										1S39815	1755	1794	39		
										1S39829	9886	9933	47		
										1S40833	5176	5271	95		
										1S40834	2255	2261	6		
										1S41039	9896	9929	33		
										1S41077	3505	3535	30		
										1S41768	8642	8800	158		
										1S41945	425	610	185		
										1S41946	6560	6560	0		
										1S42468	5068	5193	125		
										1S43003	3124	3212	88		
										1S43004	9907	9976	69		
										1S43005	5201	5296	95		
										1S43147	1652	1715	63		
										1S43148	3081	3089	8		

Sl. No.	Name of Division	Name of PSS	Voltage Level	Name Out going 11 KV feeder	Distribution Transformer Capacity in KVA/11KV Bulk Consumer	Distribution Transformer Location- Code/ Bulk Consumer Location	A	B	C=B-A	Consumer ID No./ Meter No.	D	E	F=E-D	G=C-∑F	% of LT Loss w.r.t Input Energy
							Initial meter reading at LT side of DTR (LU)	Final meter reading at LT side of DTR (LU)	Energy consumption at destination end during interval in LU		Initial meter reading at Consumer side (U)	Final meter reading at consumer side (U)	Energy consumption at destination end during interval in Unit	LT line loss in LU	
										1S43197	13811	13961	150		
										1S43778	5027	5040	13		
										1S43883	0	0	0		
										1S43884	2657	2668	11		
										1S43910	770	867	97		
										1S43911	4149	4211	62		
										1S43972	8876	8995	119		
										1S44015	1367	1449	82		
										1S44016	9645	9789	144		
										1S44017	3415	3477	62		
										1S44038	6650	6694	44		
										1S44061	2499	2573	74		
										1S44459	16954	16954	0		
										1S44615	7861	7906	45		
										1S44694	8776	8959	183		
										1S44695	2519	2687	168		
										1S45011	4230	4284	54		
										1S45012	2985	3062	77		
										1S45591	6407	6458	51		
										1S45633	12088	12159	71		
										1S45839	5177	5212	35		
										1S46642	3951	4034	83		
										1S48379	9730	9868	138		
										1S48384	6421	6463	42		
										1S48941A	9891	10010	119		
										1S48970	7668	7802	134		
										1S49111	10012	10095	83		
										1S49599	5174	5252	78		
										1S49600	6229	6284	55		
										1S49601	4155	4233	78		
										1S49999	8741	8868	127		
										1S50001	6391	6446	55		
										1S50005	6357	6437	80		
										1S50006	10401	10435	34		
										1S50017	7806	7881	75		
										1S50380	14823	14944	121		
										1S50381	17854	17965	111		
										1S50462	6319	6457	138		

Sl. No.	Name of Division	Name of PSS	Voltage Level	Name Out going 11 KV feeder	Distribution Transformer Capacity in KVA/11KV Bulk Consumer	Distribution Transformer Location- Code/ Bulk Consumer Location	A	B	C=B-A	Consumer ID No./ Meter No.	D	E	F=E-D	G=C-∑F	% of LT Loss w.r.t Input Energy
							Initial meter reading at LT side of DTR (LU)	Final meter reading at LT side of DTR (LU)	Energy consumption at destination end during interval in LU		Initial meter reading at Consumer side (U)	Final meter reading at consumer side (U)	Energy consumption at destination end during interval in Unit	LT line loss in LU	
										1S50463	0	0	0		
										1S50465	3954	3980	26		
										1S50466	4507	4548	41		
										1S50587	4265	4282	17		
										1S50588	8829	8934	105		
										1S50713	5743	5752	9		
										1S50714	9280	9389	109		
										1S50715	10968	11136	168		
										1S50835	7038	7149	111		
										1S50836	9193	9271	78		
										1S51600	5632	5728	96		
										1S52396	9280	9429	149		
										1S52631	8309	8340	31		
										1S52633	3255	3280	25		
										1S52634	5646	5726	80		
										1S52635	6957	7059	102		
										1S52636	4254	4336	82		
										1S52639	2780	2780	0		
										1S52640A	2807	2827	20		
										1S53246	2042	2081	39		
										1S53351	8794	8844	50		
										1S53352	4732	4802	70		
										1S53357	5662	5783	121		
										1S53358	4388	4477	89		
										1S53359	0	0	0		
										1S53379	6909	6988	79		
										1S53606	0	0	0		
										1S53675	4014	4091	77		
										1S53676	3874	3916	42		
										1S53856	5080	5197	117		
										1S54102	4291	4326	35		
										1S54103	4977	5058	81		
										1S54175	3820	3885	65		
										1S54176	8973	9028	55		
										1S54256	8982	9089	107		
										1S54714	6131	6216	85		
										1S54834	1608	1614	6		
										1S54935	1138	1146	8		

Sl. No.	Name of Division	Name of PSS	Voltage Level	Name Out going 11 KV feeder	Distribution Transformer Capacity in KVA/11KV Bulk Consumer	Distribution Transformer Location- Code/ Bulk Consumer Location	A	B	C=B-A	Consumer ID No./ Meter No.	D	E	F=E-D	G=C-∑F	% of LT Loss w.r.t Input Energy
							Initial meter reading at LT side of DTR (LU)	Final meter reading at LT side of DTR (LU)	Energy consumption at destination end during interval in LU		Initial meter reading at Consumer side (U)	Final meter reading at consumer side (U)	Energy consumption at destination end during interval in Unit	LT line loss in LU	
										1S55180	6416	6480	64		
										1S55627	7345	7523	178		
										1S55628	6492	6629	137		
										1S55629	5350	5489	139		
										1S55786	6180	6349	169		
										1S55787	7169	7355	186		
										1S55788	13804	14006	202		
										1S55789	6251	6347	96		
										1S55827	7099	7139	40		
										1S56213	7706	7895	189		
										1S56300	6686	6751	65		
										1S56673	11540	11770	230		
										1S56674	116	116	0		
										1S56879	3910	3910	0		
										1S56880	14431	14431	0		
										1S56964	7820	7909	89		
										1S56965	1800	1839	39		
										1S57089	3529	3581	52		
										1S57189	14118	14336	218		
										1S57190	5080	5174	94		
										1S57191	4940	5041	101		
										1S57192	5525	5637	112		
										1S57193	3692	3809	117		
										1S57522	3154	3155	1		
										1S57523	6861	6952	91		
										1S60866	2351	2381	30		
										1S60867	182	189	7		
										1S62722	812	841	29		
										1S62723	2118	2271	153		
										1SH14002	16956	17018	62		
										1SH17054	21715	21912	197		
										1SH17331	10040	10072	32		
										1SH18737	18819	18859	40		
										1SH19399	3820	3879	59		
										1SH19765	27776	27954	178		
										1SH19766	7025	7034	9		
										1SH22337	25274	25520	246		
										1SH22338	12040	12144	104		

Sl. No.	Name of Division	Name of PSS	Voltage Level	Name Out going 11 KV feeder	Distribution Transformer Capacity in KVA/11KV Bulk Consumer	Distribution Transformer Location- Code/ Bulk Consumer Location	A	B	C=B-A	Consumer ID No./ Meter No.	D	E	F=E-D	G=C-∑F	% of LT Loss w.r.t Input Energy
							Initial meter reading at LT side of DTR (LU)	Final meter reading at LT side of DTR (LU)	Energy consumption at destination end during interval in LU		Initial meter reading at Consumer side (U)	Final meter reading at consumer side (U)	Energy consumption at destination end during interval in Unit	LT line loss in LU	
										1SH22927	7444	7486	42		
										1SH22972	11310	11389	79		
										1SH24201	13110	13256	146		
										1SH24203	12023	12173	150		
										1SH24500	10535	10606	71		
										1SH25197	13722	13793	71		
										1SH25340	15310	15403	93		
										1SH25461	7577	7687	110		
										1SH26317	26585	26679	94		
										1SH37375	12637	12767	130		
										1SH37376	19256	19306	50		
										1SH38927	22219	22315	96		
										1SH40863	46885	47136	251		
										1SH42397	5127	5221	94		
										1SH44878	19282	19446	164		
										1SH44879	17086	17352	266		
										1SH48894	6670	6795	125		
										1SH48895	1846	1882	36		
										1SH48896	9758	9912	154		
										1SH50434	3874	3930	56		
										1SH53646	2139	2205	66		
										1SH55450	7576	7851	275		
										1SH55686	612	639	27		
										1SH57070	1279	1370	91		
										1SH57249	1441	1635	194		
										1SP5572	10673	10784	111		
										1SP5574	11122	11122	0		
										1SP5636	9968	10395	427		
										1SP5644	8053	8069	16		
										IS48940	11846	12085	239		
										IS50834	7212	7339	127		
										MS1S56235	3842	3877	35		
										MS1S56236	5223	5344	121		
										MS1S56237	1903	1944	41		
										MS1S56238	3296	3320	24		

Sl. No.	Name of Division	Name of PSS	Voltage Level	Name Out going 11 KV feeder	Distribution Transformer Capacity in KVA/11KV Bulk Consumer	Distribution Transformer Location- Code/ Bulk Consumer Location	A	B	C=B-A	Consumer ID No./ Meter No.	D	E	F=E-D	G=C-∑F	% of LT Loss w.r.t Input Energy
							Initial meter reading at LT side of DTR (LU)	Final meter reading at LT side of DTR (LU)	Energy consumption at destination end during interval in LU		Initial meter reading at Consumer side (U)	Final meter reading at consumer side (U)	Energy consumption at destination end during interval in Unit	LT line loss in LU	
										MS1S57385	68307	71070	2763		
										SP3086	74758	74758	0		
										SP4597	20112	20222	110		
										SP4653	67444	67827	383		
SUB-TOTAL (3)													22700		
4	Jaynagar	Jaydeva	66/11	11 KV F4 Hanumantha ppa Rmu (50% LL 1.61)	100	TC-177/GOVINDA SINGLE	23.596	23.646	0.050	1S27577	817	817	0	0.002	4.325
										1S3499	5091	5148	57		
										1S3500	4541	4685	144		
										1S3501	445	507	62		
										1S3503	3677	3758	81		
										1S3504	3567	3605	38		
										1S3505	3066	3172	106		
										1S3507	6474	6636	162		
										1S3508	48	111	63		
										1S3509	2683	2822	139		
										1S3510	6067	6200	133		
										1S44160	63536	63973	437		
										1S49293	891	909	18		
										1SH13987	1782	1930	148		
										1SH13988	7172	7177	5		
										1SH13989	18096	18286	190		
										1SH15817	11380	11432	52		
										1SH163	19137	19242	105		
										1SH164	8454	8493	39		
										1SH165	10342	10509	167		
										1SH166	1095	1338	243		
										1SH16953	57853	57853	0		
										1SH19142	8613	8700	87		
										1SH38828	18465	18639	174		
										1SH40293	23971	23982	11		
										1SH43661	773	773	0		
										1SH4391	20600	20600	0		
										1SH4392	13600	13600	0		
										1SH4393	8383	8857	474		
										1SH45082	21560	21656	96		
										1SH48907	11615	11729	114		
										1SH51604	0	0	0		

Sl. No.	Name of Division	Name of PSS	Voltage Level	Name Out going 11 KV feeder	Distribution Transformer Capacity in KVA/11KV Bulk Consumer	Distribution Transformer Location- Code/ Bulk Consumer Location	A	B	C=B-A	Consumer ID No./ Meter No.	D	E	F=E-D	G=C-∑F	% of LT Loss w.r.t Input Energy
							Initial meter reading at LT side of DTR (LU)	Final meter reading at LT side of DTR (LU)	Energy consumption at destination end during interval in LU		Initial meter reading at Consumer side (U)	Final meter reading at consumer side (U)	Energy consumption at destination end during interval in Unit	LT line loss in LU	
										1SH6146	1600	1600	0		
										1SH6963	16793	16952	159		
										1SH7000	1316	1436	120		
										1SH9009	12212	12345	133		
										1SH9157	1675	1840	165		
										1SP2826	31518	31792	274		
										S1U2STL045A	5861	6421	560		
SUB-TOTAL (4)													**4756**		
5	JAYANAGAR	JAYADEVA	66/11	11 kV F4 Hanumanthappa Rmu (50%, U-1, S1) Feeder	500	TC-149/PAWANDAMA	10.807	11.204	0.398	1S23580	38748	39083	335	0.024	6.020
										1S23618	6723	6723	0		
										1S4547	36857	38159	1302		
										1S50409	16676	17147	471		
										1S62716	79	84	5		
										1S62995	77	81	4		
										1SH40396	239	239	0		
										1SH40506	1224	1379	155		
										1SH40587	31000	33298	2298		
										1SH40729	6229	6351	122		
										1SH40730	5682	5762	80		
										1SH41003	18133	18323	190		
										1SH41170	30427	30638	211		
										1SH41171	24622	28718	4096		
										1SH41836	21113	21295	182		
										1SH41845	6837	9005	2168		
										1SH41846	281	3303	3022		
										1SH42028	42064	42234	170		
										1SH43892	29192	29837	645		
										1SH43965	852	2064	1212		
										1SH44212	20399	20544	145		
										1SH44358	10886	10941	55		
										1SH44873	34002	34265	263		
										1SH44874	2570	2589	19		
										1SH44875	2539	2553	14		
										1SH45124	28788	29080	292		
										1SH45126	2866	2870	4		
										1SH45182	18790	19104	314		
										1SH45183	12489	12768	279		
										1SH46865	16338	16558	220		

Sl. No.	Name of Division	Name of PSS	Voltage Level	Name Out going 11 KV feeder	Distribution Transformer Capacity in KVA/11KV Bulk Consumer	Distribution Transformer Location- Code/ Bulk Consumer Location	A	B	C=B-A		D	E	F=E-D	G=C-∑F	
							Initial meter reading at LT side of DTR (LU)	Final meter reading at LT side of DTR (LU)	Energy consumption at destination end during interval in LU	Consumer ID No./ Meter No.	Initial meter reading at Consumer side (U)	Final meter reading at consumer side (U)	Energy consumption at destination end during interval in Unit	LT line loss in LU	% of LT Loss w.r.t Input Energy
										1SH47129	16324	16432	108		
										1SH47130	18319	18577	258		
										1SH47131	2743	2813	70		
										1SH47437	20341	20604	263		
										1SH47438	11682	11808	126		
										1SH47439	1303	1314	11		
										1SH47542	14669	14824	155		
										1SH47860	11653	11929	276		
										1SH47861	10444	10595	151		
										1SH48534	29869	30250	381		
										1SH48808	8769	9048	279		
										1SH48809	2174	2198	24		
										1SH50335	10348	10528	180		
										1SH50336	12898	13086	188		
										1SH50337	2379	2407	28		
										1SH50482	18204	18484	280		
										1SH50483	10631	10846	215		
										1SH50484	5044	5084	40		
										1SH51390	6982	7177	195		
										1SH51391	8501	8605	104		
										1SH51393	2298	2329	31		
										1SH51462	8926	9077	151		
										1SH51463	12938	13162	224		
										1SH51464	1776	1785	9		
										1SH52180	7276	7278	2		
										1SH53495	6177	6296	119		
										1SH53528	4989	5106	117		
										1SH54067	3962	4049	87		
										1SH54068	6678	6791	113		
										1SH54069	2929	2959	30		
										1SH54893	6273	6409	136		
										1SH54894	602	620	18		
										1SH56847	351	384	33		
										1SH56848	2345	2498	153		
										1SH56849	1571	1685	114		
										1SH56850	2530	2648	118		
										1SH56851	500	527	27		
										1SP5162	2182	2188	6		

Sl. No.	Name of Division	Name of PSS	Voltage Level	Name Out going 11 KV feeder	Distribution Transformer Capacity in KVA/11KV Bulk Consumer	Distribution Transformer Location- Code/ Bulk Consumer Location	A	B	C=B-A	Consumer ID No./ Meter No.	D	E	F=E-D	G=C-∑F	% of LT Loss w.r.t Input Energy
							Initial meter reading at LT side of DTR (LU)	Final meter reading at LT side of DTR (LU)	Energy consumption at destination end during interval in LU		Initial meter reading at Consumer side (U)	Final meter reading at consumer side (U)	Energy consumption at destination end during interval in Unit	LT line loss in LU	
										1SP5526	19982	20236	254		
										MS1S61981	5813	13079	7265		
										MS1S62337	1193	2988	1795		
										MS1SH47119	131	1363	1232		
										MS1SH54342	24746	25276	530		
										S1SH45125	17470	17568	98		
										SH41461	7720	8017	297		
										SH42922	41689	42020	331		
										SH43132	36270	36703	433		
										SH43133	35632	35826	194		
										SH43134	4398	4398	0		
										SH45248	39821	40454	633		
										SH45558	47071	48121	1050		
										SP4999	34657	34833	176		
SUB-TOTAL (5)													**37381**		
TOTAL [Sub-Total (1) to (5)]									**0.908**	**TOTAL LT LINE LOSS w.r.t. INPUT ENERGY IN LU**				**0.052**	**5.782**
TOTAL ENERGY AT DTR SIDE OF BANGLORE SOUTH CIRCLE (Energy Input at 11 kV side at PSS - Energy Loss in 11 kV Feeders)									**4036.441**	**Banglore South Circle LT line loss w.r.t. total input energy (DTR side)**				**233.380**	**5.782**
Banglore South Circle 11KV side Input Energy									**4239.000**	**Banglore South Circle LT line loss w.r.t. total input energy (11 kV side)**				**233.380**	**5.506**

LT LINE LOSS ASSESSMENT DETAIL
OF
HUBLI CIRCLE
IN
KARNATAKA STATE

D. LT LINE LOSS ASSESSMENT DETAIL OF HUBLI CIRCLE

Sl. No.	Name of Division	Name of PSS	Voltage Level	Name of Outgoing 11 kV Feeder	Distribution Transformer Capacity in KVA/ 11 kV Bulk Consumer	Distribution Transformer Location Code/ Bulk Consumer Location	A	B	C=B-A	Consumer ID No./ Meter No.	D	E	F=E-D	G=C-∑F	% of LT Loss w.r.t Input Energy
							Initial Meter Reading at LT side of DTR (LU)	Final Meter Reading at LT side of DTR (LU)	Energy Consumption at destination end during interval in LU		Initial Meter Reading at Consumer side (U)	Final Meter Reading at Consumer side (U)	Energy Consumption at destination end during interval in Unit	LT Line Loss in LU	
1	**HUBLI**	BIDNAL	220/ 11 kV	GABBUR	100	Roshan Garage TC	0.164	0.469	0.305	221306C			2121	0.031	10.167
2										221307C			111		
3										221308C			817		
4										221309C			2111		
5										MP221517			743		
6										R314236C			921		
7										R314237C			268		
8										R315833C			653		
9										R316241C			1785		
10										R316242C			2811		
11										R317033C			899		
12										R324572C			128		
13										R324573C			1417		
14										R326080C			946		
15										R328628C			3113		
16										R95045C			715		
17										RGBMP304227			618		
18										RGBRMP317293			304		
19										RGBRMP90277			683		
20										RMP316975			141		
21										RMP317215			5444		
22										RMP326079			650		
SUB-TOTAL (1)									**0.305**				**27,399**	**0.031**	**10.167**
1	HUBLI	BIDNAL	110/ 11 kV	S G NAGAR	25	S.G. Nagar TC No-6	0.456	0.488	0.032	220606			24	0.003	9.781
2										220730			52		
3										221672			15		
4										332651			76		
5										R314800			30		
6										R314906			65		
7										R314909			18		

Sl. No.	Name of Division	Name of PSS	Voltage Level	Name of Outgoing 11 kV Feeder	Distribution Transformer Capacity in KVA/ 11 kV Bulk Consumer	Distribution Transformer Location Code/ Bulk Consumer Location	A	B	C=B-A	Consumer ID No./ Meter No.	D	E	F=E-D	G=C-∑F	% of LT Loss w.r.t Input Energy
							Initial Meter Reading at LT side of DTR (LU)	Final Meter Reading at LT side of DTR (LU)	Energy Consumption at destination end during interval in LU		Initial Meter Reading at Consumer side (U)	Final Meter Reading at Consumer side (U)	Energy Consumption at destination end during interval in Unit	LT Line Loss in LU	
8										R315201			50		
9										R315503			34		
10										R315706			37		
11										R315773			67		
12										R316138			42		
13										R316451			52		
14										R316522			67		
15										R317185			102		
16										R319080			106		
17										R320148			121		
18										R323506			46		
19										R323557			58		
20										R324755			67		
21										R325267			62		
22										R325299			26		
23										R325461			73		
24										R325550			55		
25										R325726			57		
26										R325947			23		
27										R326004			39		
28										R326071			56		
29										R326540			47		
30										R326640			71		
31										R327023			25		
32										R327484			51		
33										R327591			23		
34										R328196			8		
35										R329734			58		
36										R330164			34		
37										R330781			27		
38										RCSTL122			142		
39										RMP315243			881		
SUB-TOTAL (2)									**0.032**				**2,887**	**0.003**	**9.781**

Sl. No.	Name of Division	Name of PSS	Voltage Level	Name of Outgoing 11 kV Feeder	Distribution Transformer Capacity in KVA/ 11 kV Bulk Consumer	Distribution Transformer Location Code/ Bulk Consumer Location	A	B	C=B-A	Consumer ID No./ Meter No.	D	E	F=E-D	G=C-∑F	% of LT Loss w.r.t Input Energy
							Initial Meter Reading at LT side of DTR (LU)	Final Meter Reading at LT side of DTR (LU)	Energy Consumption at destination end during interval in LU		Initial Meter Reading at Consumer side (U)	Final Meter Reading at Consumer side (U)	Energy Consumption at destination end during interval in Unit	LT Line Loss in LU	
1	HUBLI	PH	110/ 11 kV	A Trunk	100	Vithobha Galli TC	0.591	0.807	0.216	217485C			2290	0.022	10.065
2										217742C			2167		
3										217743C			157		
4										217744C			187		
5										217745C			112		
6										29911C			172		
7										4959A			168		
8										62197C			91		
9										62198C			189		
10										62298C			143		
11										R12426A			185		
12										R12427A			173		
13										R13492			143		
14										R14486			137		
15										R14487			132		
16										R1501A			199		
17										R19893A			181		
18										R2350A			114		
19										R25252			151		
20										R2580			149		
21										R313206			193		
22										R316459A			154		
23										R316460A			419		
24										R31945			89		
25										R31946			72		
26										R320440C			255		
27										R320441C			145		
28										R320442C			13		
29										R320443C			23		
30										R320444			218		
31										R325073C			6		
32										R331504C			2192		
33										R3496A			162		
34										R3600A			47		

Sl. No.	Name of Division	Name of PSS	Voltage Level	Name of Outgoing 11 kV Feeder	Distribution Transformer Capacity in KVA/ 11 kV Bulk Consumer	Distribution Transformer Location Code/ Bulk Consumer Location	A	B	C=B-A	Consumer ID No./ Meter No.	D	E	F=E-D	G=C-∑F	% of LT Loss w.r.t Input Energy
							Initial Meter Reading at LT side of DTR (LU)	Final Meter Reading at LT side of DTR (LU)	Energy Consumption at destination end during interval in LU		Initial Meter Reading at Consumer side (U)	Final Meter Reading at Consumer side (U)	Energy Consumption at destination end during interval in Unit	LT Line Loss in LU	
35										R39158C			11		
36										R51930A			168		
37										R54295C			17		
38										R54313			84		
39										R58162C			173		
40										R58163C			4		
41										R58164C			24		
42										R58165C			1		
43										R58166A			48		
44										R58167A			2111		
45										R58168A			242		
46										R58169A			24		
47										R6107			36		
48										R6479A			258		
49										R7954			80		
50										R8405A			2		
51										R90177C			247		
52										R90178C			1		
53										R90179C			180		
54										R90180C			178		
55										R90181C			173		
56										R90182C			164		
57										R90183C			135		
58										R90184C			23		
59										R90185C			2187		
60										R90186C			98		
61										R90187C			112		
62										R90188C			129		
63										R90189C			231		
64										R90190C			57		
65										R90191C			118		
66										R90193A			175		
67										R90194A			29		
68										R90195A			5		

Sl. No.	Name of Division	Name of PSS	Voltage Level	Name of Outgoing 11 kV Feeder	Distribution Transformer Capacity in KVA/ 11 kV Bulk Consumer	Distribution Transformer Location Code/ Bulk Consumer Location	A Initial Meter Reading at LT side of DTR (LU)	B Final Meter Reading at LT side of DTR (LU)	C=B-A Energy Consumption at destination end during interval in LU	Consumer ID No./ Meter No.	D Initial Meter Reading at Consumer side (U)	E Final Meter Reading at Consumer side (U)	F=E-D Energy Consumption at destination end during interval in Unit	G=C-∑F LT Line Loss in LU	% of LT Loss w.r.t Input Energy
69										R90197A			193		
70										R90A			301		
71										R9329A			172		
72										RMP3654			7		
SUB-TOTAL (3)									**0.216**				**19,426**	**0.022**	**10.065**
1	HUBLI	BIDNAL	110/11 KV	BIDNAL	63	Laxmi Nagar TC	0.571	0.645	0.074	221241			10	0.007	9.986
2										221264			30		
3										221265			42		
4										221266			31		
5										221267			8		
6										221268			5		
7										221676			20		
8										332751			28		
9										332752			56		
10										332753			25		
11										332754			26		
12										332920			27		
13										332922			28		
14										R301959			14		
15										R303862			27		
16										R303863			76		
17										R303864			79		
18										R303865			54		
19										R303866			90		
20										R303867			37		
21										R303868			37		
22										R303869			91		
23										R303870			47		
24										R303871			81		
25										R304221			38		
26										R304222			167		
27										R304481			305		
28										R304629			436		

Sl. No.	Name of Division	Name of PSS	Voltage Level	Name of Outgoing 11 kV Feeder	Distribution Transformer Capacity in KVA/ 11 kV Bulk Consumer	Distribution Transformer Location Code/ Bulk Consumer Location	A	B	C=B-A	Consumer ID No./ Meter No.	D	E	F=E-D	G=C-∑F	% of LT Loss w.r.t Input Energy
							Initial Meter Reading at LT side of DTR (LU)	Final Meter Reading at LT side of DTR (LU)	Energy Consumption at destination end during interval in LU		Initial Meter Reading at Consumer side (U)	Final Meter Reading at Consumer side (U)	Energy Consumption at destination end during interval in Unit	LT Line Loss in LU	
29										R305156			139		
30										R305157			79		
31										R305236			116		
32										R305367			18		
33										R306148			33		
34										R307179			22		
35										R311307			79		
36										R311344			29		
37										R311960			61		
38										R312939			105		
39										R313201			47		
40										R313306			173		
41										R313843			81		
42										R313877			38		
43										R313960			94		
44										R314161			72		
45										R314170			36		
46										R314231			60		
47										R314314			24		
48										R314670			120		
49										R315145			45		
50										R315254			53		
51										R315514			123		
52										R315645			68		
53										R316600			21		
54										R317432			35		
55										R318011			100		
56										R318012			33		
57										R318013			31		
58										R318197			88		
59										R318308			18		
60										R318309			57		
61										R318310			20		
62										R319072			89		

Sl. No.	Name of Division	Name of PSS	Voltage Level	Name of Outgoing 11 kV Feeder	Distribution Transformer Capacity in KVA/ 11 kV Bulk Consumer	Distribution Transformer Location Code/ Bulk Consumer Location	A	B	C=B-A	Consumer ID No./ Meter No.	D	E	F=E-D	G=C-∑F	% of LT Loss w.r.t Input Energy
							Initial Meter Reading at LT side of DTR (LU)	Final Meter Reading at LT side of DTR (LU)	Energy Consumption at destination end during interval in LU		Initial Meter Reading at Consumer side (U)	Final Meter Reading at Consumer side (U)	Energy Consumption at destination end during interval in Unit	LT Line Loss in LU	
63										R320346			168		
64										R320533			126		
65										R323388			88		
66										R323745			35		
67										R324179			29		
68										R324284			0		
69										R324347			19		
70										R324486			107		
71										R324527A			173		
72										R324567			73		
73										R324568			49		
74										R324756			45		
75										R324815			72		
76										R324816			60		
77										R325056			20		
78										R325057			71		
79										R325251			73		
80										R325418			34		
81										R325419			53		
82										R325420			5		
83										R325930			34		
84										R326252			73		
85										R326462			41		
86										R327413			29		
87										R327798			23		
88										R328588			66		
89										R329739			29		
90										R330355			101		
91										R331675			139		
92										R331676			66		
93										R51377			55		

Sl. No.	Name of Division	Name of PSS	Voltage Level	Name of Outgoing 11 kV Feeder	Distribution Transformer Capacity in KVA/ 11 kV Bulk Consumer	Distribution Transformer Location Code/ Bulk Consumer Location	A Initial Meter Reading at LT side of DTR (LU)	B Final Meter Reading at LT side of DTR (LU)	C=B-A Energy Consumption at destination end during interval in LU	Consumer ID No./ Meter No.	D Initial Meter Reading at Consumer side (U)	E Final Meter Reading at Consumer side (U)	F=E-D Energy Consumption at destination end during interval in Unit	G=C-∑F LT Line Loss in LU	% of LT Loss w.r.t Input Energy
94										R95519			105		
95										RCSTL134			393		
96										RMP304620			85		
SUB-TOTAL (4)									**0.074**				**6,661**	**0.007**	**9.986**
TOTAL [Sub-Total (1) to (4)]									**0.627**				**56373**	**0.063**	**10.091**
Like above LT Feeders we assess the below LT Feeders Result															
1	**GADAG**	Gajendragad	110/ 11 kV	Gajendragad	25	BAMS College TC	1.36	1.3786	0.019						
SUB-TOTAL (1)									**0.019**						
2		Gajendragad	110/ 11 kV	Gajendragad	63	Halakeri TC	0.76275	0.88275	0.120						
SUB-TOTAL (2)									**0.120**						
3		Naregal	110/ 11 kV	Naregal	100	Annadaneshwara Colony TC	21.513	21.6597	0.147						
SUB-TOTAL (3)									**0.147**						
4		Naregal	110/11 KV	Naregal	250	Gajendragada Road TC	6.4764	6.9564	0.480						
SUB-TOTAL (4)									**0.480**						
TOTAL [Sub-Total (1) to (4)]									**0.765**					**0.077**	**10.091**

Sl. No.	Name of Division	Name of PSS	Voltage Level	Name of Outgoing 11 kV Feeder	Distribution Transformer Capacity in KVA/ 11 kV Bulk Consumer	Distribution Transformer Location Code/ Bulk Consumer Location	A	B	C=B-A	Consumer ID No./ Meter No.	D	E	F=E-D	G=C-∑F	% of LT Loss w.r.t Input Energy
							Initial Meter Reading at LT side of DTR (LU)	Final Meter Reading at LT side of DTR (LU)	Energy Consumption at destination end during interval in LU		Initial Meter Reading at Consumer side (U)	Final Meter Reading at Consumer side (U)	Energy Consumption at destination end during interval in Unit	LT Line Loss in LU	
1	**DHARWAD**	USA DHARWAD	33/11 KV	11 kV Agri Feeder - F1	25	A Block	0.087051	0.10712	0.020						
SUB-TOTAL (1)									**0.020**						
2		USA DHARWAD	33/11 KV	11 kV Agri Feeder - F1	63	Bhavi	0.74814	0.810248	0.062						
SUB-TOTAL (2)									**0.062**						
3		KUD	110/ 11 kV	Basaveshwara	100	Sriramnagar Masooti	1.663089	1.781778	0.119						
SUB-TOTAL (3)									**0.119**						
4		KUD	110/ 11 kV	Basaveshwara	250	Gurudatta Appartment Old 250	0.463264	0.588912	0.126						
SUB-TOTAL (4)									**0.126**						
TOTAL [Sub-Total (1) to (4)]									**0.327**					**0.033**	**10.091**
GRAND TOTAL (Hubli, Gadag & Dharwad Division)									**1.719**					**0.173**	**10.091**
TOTAL ENERGY AT DTR SIDE OF HUBLI CIRCLE (Energy Input at 11 kV side at PSS - Energy Loss in 11 kV Feeders)									**1071.722**	**TOTAL LT LINE LOSS w.r.t. INPUT ENERGY IN LU**				**108.146**	**10.091**
HUBLI CIRCLE 11 kV SIDE INPUT ENERGY									**1138.094**	**HUBLI CIRCLE LT LINE LOSS w.r.t. TOTAL INPUT ENERGY (11 kV Side)**				**108.146**	**9.502**
HUBLI CIRCLE 33 kV SIDE INPUT ENERGY									**535.290**	**HUBLI CIRCLE LT LINE LOSS w.r.t. TOTAL INPUT ENERGY (33 kV side)**				**108.146**	**20.203**

N.B: Initial & final meter reading values are multiplied with Meter multiplication factor (M.F).

LT LINE LOSS ASSESSMENT DETAIL
OF
GULBERGA CIRCLE
IN
KARNATAKA STATE

STUDY ON COMPONENT-WISE AT&C LOSSES ASSESSMENT FOR THE STATE OF KARNATAKA

D) LT LINE LOSS DETAIL OF GULBARGA CIRCLE

Sl. No.	Name of Division	Name of PSS	Voltage Level	Name of Outgoing 11 kV Feeder	Distribution Transformer Capacity in kVA/ 11 kV Bulk Consumer	Distribution Transformer Location-Code/ Bulk Consumer Location	A	B	C = B-A		D	E	F = E-D	G = C-∑F	
							Initial Meter Reading at LT side of DTR (LU)	Final Meter Reading at LT side of DTR (LU)	Energy Consumption at Destination end during nterval in LU	Consumer ID No. / Meter No.	Initial Meter Reading at Consumer side (U)	Final Meter Reading at Consumer side (U)	Energy Consumption at Destination end during Interval in Unit	LT Line Loss in LU	% of LT Loss w.r.t Input Energy
1	GULBARGA II	110KV Chittapur	220/110/1	RAILWAY	25	Ashraya I	1.78	1.79	0.01	WTCH18001	2400	2441	41	0.001	9.142
										HDNL18018	1730	1745	15		
										KRWL18017	2153	2160	7		
										KRWL18020	1783	1810	27		
										KRWL18019	1734	1745	11		
										WTCH18004	1311	1346	35		
										WTCH18002	1506	1544	38		
										INDL18003	1832	1860	28		
										INDL18006	749	789	40		
										TL18007	2551	2591	40		
										ARJL18008	2114	2159	45		
										MD18009	1918	1954	36		
										MD18010	1502	1528	26		
										KLG17949	2101	2163	62		
										RJRL17950	1909	1938	29		
										RJRL17951	1380	1436	56		
										CHNL17952	1648	1760	112		
										MNGL17957	895	921	26		
										RJRL17956	1650	1680	30		
										KLG17969	1467	1488	21		
										RJRL17974	768	788	20		
										RVG17975	662	675	13		
										KLG17979	2750	2790	40		
										HUL17985	1358	1360	2		
										RJRL17988	974	1009	35		
										KLG17961	1354	1413	59		
										KLG17962	670	680	10		
										KDR17989	2110	2146	36		
										AKL17990	1142	1166	24		
Sub-Total 1									**0.01**				**964**	**0.001**	**9.142**
2	GULBARGA I	V.K. SALAGAR	33/11KV	F1 Ambalga	63	Ambalga Thanda Montle Land 63KVA DTC	0.05	0.16	0.11	BNH173	3711	3715	4	0.009	8.604
										BNH181	583	598	15		
										BNH5892	1379	1400	21		
										BNH5895	1009	1050	41		
										BNH5993	768	784	16		
										BNH5994	904	914	10		
										BNH48	1794	1831	37		

Sl. No.	Name of Division	Name of PSS	Voltage Level	Name of Outgoing 11 kV Feeder	Distribution Transformer Capacity in kVA/ 11 kV Bulk Consumer	Distribution Transformer Location-Code/ Bulk Consumer Location	A	B	C = B-A		D	E	F = E-D	G = C-∑F	
							Initial Meter Reading at LT side of DTR (LU)	Final Meter Reading at LT side of DTR (LU)	Energy Consumption at Destination end during nterval in LU	Consumer ID No. / Meter No.	Initial Meter Reading at Consumer side (U)	Final Meter Reading at Consumer side (U)	Energy Consumption at Destination end during Interval in Unit	LT Line Loss in LU	% of LT Loss w.r.t Input Energy
										BNH10589	703	715	12		
										BNH20922	72	101	29		
										BNH20923	514	519	5		
										BNH20967	737	740	3		
										BNH20971	1042	1071	29		
										BNH21111	817	831	14		
										BNH21110	495	500	5		
										BNH21112	351	379	28		
										BNH21120	566	570	4		
										BNH21121	515	525	10		
										BNH21122	443	480	37		
										BNH21127	2476	2503	27		
										BNH21128	1261	1294	33		
										BNH21129	1059	1084	25		
										BNH21130	544	549	5		
										BNH21131	1130	1132	2		
										BNH21132	1804	1833	29		
										BNH21133	1566	1597	31		
										BNH21137	1312	1329	17		
										BNH21138	407	423	16		
										BNH21139	1764	1790	26		
										BNH15293	616	631	15		
										BNH15294	1270	1303	33		
										BNH13322	2765	2804	39		
										BNH13323	509	516	7		
										BNH13324	1863	1867	4		
										BNH27214	3110	3156	46		
										BNH27004	1588	1592	4		
										THT1	640	9753	9113		
Sub-Total 2									**0.11**				**9792**	**0.009**	**8.604**
3	SEDAM	CHINCHOLLI	110/33/11	CHINCHOLLI	63	Baburao Patil IP TC	0.03	0.21	0.17	ATLM6967	345	864.00	519	0.018	10.624
										ATLM6971	1300	1410	110		
										ATLM7993	76654	77654	1000		
										ATLM7995	1188	1377	189		
										ATLM7913	1851	2150	299		
										ATLM7797	3742	3799	57		
										ATLM7914	1197	1876	679		
										ATLM7915	3421	3876	455		
										ATLM7916	5879	5930	51		
										ATLM7917	607	613	6		
										ATLM7918	1986	2856	870		
										ATLM7919	2060	2109	49		

Sl. No.	Name of Division	Name of PSS	Voltage Level	Name of Outgoing 11 kV Feeder	Distribution Transformer Capacity in kVA/ 11 kV Bulk Consumer	Distribution Transformer Location-Code/ Bulk Consumer Location	A	B	C = B-A		D	E	F = E-D	G = C-∑F	
							Initial Meter Reading at LT side of DTR (LU)	Final Meter Reading at LT side of DTR (LU)	Energy Consumption at Destination end during nterval in LU	Consumer ID No. / Meter No.	Initial Meter Reading at Consumer side (U)	Final Meter Reading at Consumer side (U)	Energy Consumption at Destination end during Interval in Unit	LT Line Loss in LU	% of LT Loss w.r.t Input Energy
										ATLM7920	3047	3739	692		
										ATLM7921	950	995	45		
										ATLM7922	1433	1932	499		
										ATLM7923	4434	4501	67		
										ATLM6978	6543	7853	1310		
										ATLM9034	2341	7654	5313		
										ATLM7045	6543	6741	198		
										ATLM7115	3662	4630	968		
										ATLM7120	4223	4242	19		
										ATLM7192	2343	2415	72		
										ATLM7193	2342	2484	142		
										ATLM8924	300	865	565		
										ATLM9030	2513	2568	55		
										ATLM9032	3996	4027	31		
										ATLM9033	1424	1476	52		
										ATLM9168	1879	1925	46		
										ATLM9169	308	310	2		
										ATLM9122	480	503	23		
										ATLM9123	2032	2115	83		
										ATLM9124	4219	4349	130		
										ATLM9125	1905	1970	65		
										ATLM9167	1340	1390	50		
										ATLM9171	5639	5806	167		
										ATLM9175	542	559	17		
										ATLM9177	3450	3482	32		
										ATLM9224	371	388	17		
										ATLM9225	1644	1729	85		
										ATLM9240	1118	1140	22		
										ATLM10932	2793	2873	80		
										ATLM10933	9501	9661	160		
										ATLM12539	8059	8147	88		
										ATLM12551	3490	3522	32		
										ATLM12565	1909	1954	45		
										ATLM12568	2984	3008	24		
Sub-Total 3									**0.17**				**15480**	**0.018**	**10.624**
4	SEDAM	220/110/11KV	220/110/1	SEDAM	100	BABA COLONY-1	0.72	0.86	0.14	ATLM12618	1612	1714	102	0.011	8.185
										ATLM12619	1974	1979	5		
										ATLM12663	3364	3605	241		
										ATLM12683	3175	3505	330		
										ATLM12690	865	1069	204		
										ATLM13215	730	1005	275		
										ATLM13225	3509	3513	4		

Sl. No.	Name of Division	Name of PSS	Voltage Level	Name of Outgoing 11 kV Feeder	Distribution Transformer Capacity in kVA/ 11 kV Bulk Consumer	Distribution Transformer Location-Code/ Bulk Consumer Location	A	B	C = B-A		D	E	F = E-D	G = C-∑F	
							Initial Meter Reading at LT side of DTR (LU)	Final Meter Reading at LT side of DTR (LU)	Energy Consumption at Destination end during nterval in LU	Consumer ID No. / Meter No.	Initial Meter Reading at Consumer side (U)	Final Meter Reading at Consumer side (U)	Energy Consumption at Destination end during Interval in Unit	LT Line Loss in LU	% of LT Loss w.r.t Input Energy
										BT3	2665	2861	196		
										BT7	1686	1821	135		
										BT8	754	965	211		
										BT9	6313	6532	219		
										BT11	810	1028	218		
										BT12	1560	1976	416		
										BT15	654	1439	785		
										BT16	640	790	150		
										BT21	100	490	390		
										BT22	788	888	100		
										BT25	2230	2380	150		
										BT26	2070	2190	120		
										BT27	5246	5387	141		
										BT28	4747	4980	233		
										BT30	569	780	211		
										BT32	1490	1560	70		
										BT34	350	390	40		
										BT36	6390	6480	90		
										BT38	8841	8950	109		
										BT67	1862	1970	108		
										BT68	1205	1280	75		
										BT69	6442	6474	32		
										BT70	4654	4686	32		
										BT71	878	1256	378		
										BT72	800	1275	475		
										BT74	1492	1640	148		
										BT75	2041	2234	193		
										BT77	586	716	130		
										BT78	8211	8347	136		
										BT80	563	593	30		
										BT82	4315	4365	50		
										BT85	7609	7854	245		
										BT86	2376	2543	167		
										BT87	305	604	299		
										BT88	5421	5497	76		
										BT89	342	1481	1139		
										BT91	6136	6159	23		
										BT92	503	540	37		
										BT93	1070	1090	20		
										BT84	7698	8231	533		
										BT94	1000	1050	50		
										BT95	1210	2282	1072		

Sl. No.	Name of Division	Name of PSS	Voltage Level	Name of Outgoing 11 kV Feeder	Distribution Transformer Capacity in kVA/ 11 kV Bulk Consumer	Distribution Transformer Location-Code/ Bulk Consumer Location	A	B	C = B-A		D	E	F = E-D	G = C-∑F	
							Initial Meter Reading at LT side of DTR (LU)	Final Meter Reading at LT side of DTR (LU)	Energy Consumption at Destination end during nterval in LU	Consumer ID No. / Meter No.	Initial Meter Reading at Consumer side (U)	Final Meter Reading at Consumer side (U)	Energy Consumption at Destination end during Interval in Unit	LT Line Loss in LU	% of LT Loss w.r.t Input Energy
										BT96	440	1265	825		
										BT97	3840	4287	447		
										BT98	654	1342	688		
										BT99	540	876	336		
Sub-Total 4									**0.14**				**12889**	**0.011**	**8.185**
5	YADGIR	110/33/11 KV	110/33/11	Kandakur F-1	100	Mallappa IP Set TC	0.03	0.03	0.003	KML1438	5188	5206	18	0.000	9.038
										KML1766	5500	5520	20		
										KML1699	1263	1281	18		
										KML1683	3170	3185	15		
										KML1644	1795	1844	49		
										KML477	3552	3590	38		
										KML148	6475	6494	19		
										KML1905	4300	4310	10		
										KML1983	256	285	29		
										KML797	1732	1770	38		
										KML1975	3842	3900	58		
Sub-Total 5									**0.003**		**Sub Total**		**312**	**0.000**	**9.038**
6	YADGIR	110/33/11 KV	110/33/11	Kandakur F-1	63	Eleri Road IP Set	0.04	0.04	0.002	GGL26209	147	149	2	0.000	8.252
										KLN26210	3174	3179	5		
										KNK26211	669	670	1		
										BLC26250	833	846	13		
										SA26246	786	791	5		
										KNK26245	2990	3001	11		
										BDL26243	1169	1179	10		
										BGL26242	125	132	7		
										SHT31	478	489	11		
										SA26691	755	768	13		
										SA26688	1856	1869	13		
										SA26687	2075	2089	14		
										SA26686	2320	2331	11		
										SA26682	1629	1636	7		
										BDL26680	664	669	5		
										IDR26403	150	161	11		
										THO22937	127	131	4		
										YLT22936	615	632	17		
										BL22931	765	779	14		
										YLT22929	350	355	5		
										MDR22938	1147	1157	10		
Sub-Total 6									**0.002**			**TOTAL**	**189**	**0.000**	**8.252**

Sl. No.	Name of Division	Name of PSS	Voltage Level	Name of Outgoing 11 kV Feeder	Distribution Transformer Capacity in kVA/ 11 kV Bulk Consumer	Distribution Transformer Location-Code/ Bulk Consumer Location	A Initial Meter Reading at LT side of DTR (LU)	B Final Meter Reading at LT side of DTR (LU)	C = B-A Energy Consumption at Destination end during nterval in LU	Consumer ID No. / Meter No.	D Initial Meter Reading at Consumer side (U)	E Final Meter Reading at Consumer side (U)	F = E-D Energy Consumption at Destination end during Interval in Unit	G = C-∑F LT Line Loss in LU	% of LT Loss w.r.t Input Energy
7	GULBARGA-I	V.K. SALAGAR	33/11KV	F1 Ambalga	25KVA	Ladmugali Thand Near Lakamma Temple 25KVA	0.04	0.05	0.00	KJNBG7224	254	269	15	0.000	7.940
										KJNBG10129	1147	1162	15		
										KJNBG10130	441	487	46		
										KJNBG10131	3321	3412	91		
										KJNBG10132	3279	3294	15		
										KJNBG10133	1871	1873	2		
										KJNBG10134	3656	3686	30		
										KJNBG10135	4345	4360	15		
										KJNBG10136	2274	2288	14		
										KJNBG10137	730	736	6		
										KJNBG10138	1169	1173	4		
										KJNBG10139	1966	1983	17		
										KJNBG10140	1850	1873	23		
										KJNBG10141	1303	1318	15		
										KJNBG10142	1370	1385	15		
										KJNBG10143	1078	1100	22		
										KJNBG10144	3409	3447	38		
										KJNBG8935	7417	7431	14		
										KJNBG10268	940	946	6		
										KJNBG10269	1556	1561	5		
										KJNBG10270	1871	1881	10		
										KJNBG10271	2023	2034	11		
Sub-Total 7									**0.00**			**TOTAL**	**429**	**0.000**	**7.940**
8	GULBARGA-II	110/33/11 kV	110/33/11	JEWARGI	100	Poojari Oni	10.95	11.00	0.05	GOGL16	3977	4035	58	0.005	9.033
										GOGL19	30	41	11		
										GOGL2	100	204	104		
										GOGL20	3038	3099	61		
										GOGL21	30	257	227		
										GOGL24	890	906	16		
										GOGL29	680	884	204		
										GOGL3	7700	7930	230		
										GOGL30	4478	4496	18		
										GOGL31	465	485	20		
										GOGL32	250	260	10		
										GOGL33	1980	2305	325		
										GOGL35	1075	1106	31		
										GOGL36	1778	1820	42		
										GOGL37	220	224	4		
										GOGL38	30	487	457		
										GOGL39	1077	1101	24		
										GOGL4	7000	7100	100		
										GOGL4665	2052	2568	516		

Sl. No.	Name of Division	Name of PSS	Voltage Level	Name of Outgoing 11 kV Feeder	Distribution Transformer Capacity in kVA/ 11 kV Bulk Consumer	Distribution Transformer Location-Code/ Bulk Consumer Location	A	B	C = B-A		D	E	F = E-D	G = C-∑F	
							Initial Meter Reading at LT side of DTR (LU)	Final Meter Reading at LT side of DTR (LU)	Energy Consumption at Destination end during nterval in LU	Consumer ID No. / Meter No.	Initial Meter Reading at Consumer side (U)	Final Meter Reading at Consumer side (U)	Energy Consumption at Destination end during Interval in Unit	LT Line Loss in LU	% of LT Loss w.r.t Input Energy
										GOGL5	30	78	48		
										GOGL6251	3653	3704	51		
										GOGL6252	4180	4280	100		
										GOGL6376	3229	3250	21		
										GOGL7	30	47	17		
										GOGL7037	1032	1045	13		
										GOGL8446	2121	2357	236		
										GOGL8729	2560	2616	56		
										GOGL8730	2150	2618	468		
										GOGL8731	2420	2430	10		
										GOGL8732	790	799	9		
										GOGL8733	1853	1890	37		
										GOGL8734	30	57	27		
										GOGL8735	1200	1470	270		
										GOGL8736	1585	1590	5		
										GOGL8737	4125	4257	132		
										GOGL8738	260	378	118		
										GOGL8739	452	865	413		
										GOGL8740	476	488	12		
										GOGL8741	2550	2570	20		
										GOGL8742	1840	1877	37		
										GOGL8743	50	78	28		
										GOGL8744	1147	1230	83		
										HNCL11730	950	984	34		
Sub-Total 8									**0.05**			**TOTAL**	**4703**	**0.005**	**9.033**
9	GULBARGA-II	BILWARA	33/11KV	BILWARA	100	Ijeri Draga 100KVA TC	6.95	6.98	0.03	ING11212	1147	1158	11	0.003	8.878
										ING11211	2999	3033	34		
										ING11213	2431	2472	41		
										ING11214	1973	2009	36		
										ING11215	547	589	42		
										ING11216	6424	6432	8		
										ING11218	6709	6729	20		
										ING11219	2092	2129	37		
										ING11220	2263	2271	8		
										ING11221	4215	4225	10		
										ING11222	2994	3106	112		
										ING11224	2769	2916	147		
										ING11225	2215	2238	23		
										ING11226	2583	2606	23		
										ING11228	1895	1929	34		
										ING11229	7560	7596	36		
										ING11230	750	774	24		

Sl. No.	Name of Division	Name of PSS	Voltage Level	Name of Outgoing 11 kV Feeder	Distribution Transformer Capacity in kVA/ 11 kV Bulk Consumer	Distribution Transformer Location-Code/ Bulk Consumer Location	A	B	C = B-A		D	E	F = E-D	G = C-∑F	
							Initial Meter Reading at LT side of DTR (LU)	Final Meter Reading at LT side of DTR (LU)	Energy Consumption at Destination end during nterval in LU	Consumer ID No. / Meter No.	Initial Meter Reading at Consumer side (U)	Final Meter Reading at Consumer side (U)	Energy Consumption at Destination end during Interval in Unit	LT Line Loss in LU	% of LT Loss w.r.t Input Energy
										ING11231	2086	2093	7		
										ING11232	1147	1154	7		
										ING11233	2808	2844	36		
										ING11235	125	221	96		
										ING11236	2141	2214	73		
										ING11238	4250	4297	47		
										ING11239	2337	2383	46		
										ING11240	1149	1247	98		
										ING11242	6382	6405	23		
										ING11243	2898	2945	47		
										ING11246	1877	1899	22		
										ING11247	1943	1982	39		
										ING11248	587	654	67		
										ING11250	6312	6383	71		
										ING11251	4161	4199	38		
										ING11245	945	968	23		
										ING11252	848	864	16		
										ING11254	2623	2654	31		
										ING11255	3799	3859	60		
										ING11256	2353	2368	15		
										SN13383	12150	12200	50		
										SN13384	13080	13100	20		
										ING11258	3362	3393	31		
										ING11309	2399	2420	21		
										ING11365	4030	4089	59		
										ING14063	2613	2658	45		
										ING14064	2760	2805	45		
										ING14066	6861	6872	11		
										ING14067	4009	4038	29		
										ING14069	2459	2514	55		
										ING14070	1125	1147	22		
										ING14071	9260	9291	31		
										ING14072	247	258	11		
										ING14073	5977	6021	44		
										ING14076	3984	4046	62		
										ING14077	3403	3480	77		
										ING14078	114	127	13		
										ING14079	7420	7504	84		
										ING14223	5028	5067	39		
										ING14227	1398	1478	80		
										ING14231	1120	1168	48		
										ING14232	2014	2072	58		

Sl. No.	Name of Division	Name of PSS	Voltage Level	Name of Outgoing 11 kV Feeder	Distribution Transformer Capacity in kVA/ 11 kV Bulk Consumer	Distribution Transformer Location-Code/ Bulk Consumer Location	A	B	C = B-A		D	E	F = E-D	G = C-∑F	
							Initial Meter Reading at LT side of DTR (LU)	Final Meter Reading at LT side of DTR (LU)	Energy Consumption at Destination end during nterval in LU	Consumer ID No. / Meter No.	Initial Meter Reading at Consumer side (U)	Final Meter Reading at Consumer side (U)	Energy Consumption at Destination end during Interval in Unit	LT Line Loss in LU	% of LT Loss w.r.t Input Energy
										ING14234	965	1024	59		
										ING14235	1099	1158	59		
										ING14236	2146	2218	72		
										ING14238	5442	5476	34		
										ING14239	1146	1158	12		
Sub-Total 9									**0.03**				**2679**	**0.003**	**8.878**
10	GULBARGA-II	BILWARA	33/11KV	BILWARA	63	Bilwar Village New Area 63 KVA TC	1.31	1.34	0.03	KNDBJ14	2080	2147	67	0.002	7.653
										KNDBJ25	5643	5709	66		
										KNDBJ27	7343	7389	46		
										KNDBJ28	1125	1147	22		
										KNDBJ32	246	257	11		
										KNDRKJ24	794	824	30		
										KNDRKJ25	1128	1287	159		
										KNDRKJ30	1195	1234	39		
										KNDR2	3509	3531	22		
										KNDR7.1	4737	4759	22		
										KNDR9	2644	2801	157		
										KNDR14	1099	1123	24		
										KNDR16	3690	3722	32		
										KNDR17	1620	1658	38		
										KNDR18	5241	5273	32		
										KNDR25	4466	4539	73		
										KNDR28	3099	3115	16		
										KNDR34	1551	1580	29		
										KNDR36	3528	3570	42		
										KNDR37	4923	4974	51		
										KNDR38	2002	2020	18		
										KNDR40	1050	1082	32		
										KNDR41	3763	3843	80		
										KNDR42	4870	4900	30		
										KNDR43	458	557	99		
										KNDR44	2799	2852	53		
										KNDR45	4369	4452	83		
										KNDR48	4753	4789	36		
										KNDR49	4950	4987	37		
										KNDR53	470	548	78		
										KNDR57	2773	2795	22		
										KNDR60.1	4801	4844	43		
										KNDR61	2041	2096	55		
										KNDR62	3562	3628	66		
										KNDR64	5037	5064	27		
										KNDR65	549	598	49		

Sl. No.	Name of Division	Name of PSS	Voltage Level	Name of Outgoing 11 kV Feeder	Distribution Transformer Capacity in kVA/ 11 kV Bulk Consumer	Distribution Transformer Location-Code/ Bulk Consumer Location	A	B	C = B-A		D	E	F = E-D	G = C-∑F	
							Initial Meter Reading at LT side of DTR (LU)	Final Meter Reading at LT side of DTR (LU)	Energy Consumption at Destination end during nterval in LU	Consumer ID No. / Meter No.	Initial Meter Reading at Consumer side (U)	Final Meter Reading at Consumer side (U)	Energy Consumption at Destination end during Interval in Unit	LT Line Loss in LU	% of LT Loss w.r.t Input Energy
										KNDR6998	9432	9517	85		
										KNDR67	1127	1141	14		
										KNDR68.1	2310	2351	41		
										KNDR69	4192	4201	9		
										KNDR70.1	249	267	18		
										KNDR72	4600	4617	17		
										KNDR74	6375	6410	35		
										KNDR75	3008	3030	22		
										KNDR77	4515	4520	5		
										KNDR78	5584	5630	46		
										KNDR79	3071	3150	79		
										KNDR80	7321	7367	46		
										KNDR81	7267	7314	47		
										KNDR6332	3899	3908	9		
										KNDR7099	4012	4034	22		
										KNDR7406	8099	8104	5		
										KNDR7641	1037	1044	7		
										KNDR7646	216	258	42		
										KNDR7953	4541	4641	100		
										KNDR7428	2147	2257	110		
										KNDR8997	2915	2975	60		
										KNDR9126	4514	4568	54		
										KNDR9127	2479	2489	10		
										KNDR9281	4106	4152	46		
Sub-Total 10									**0.03**				**2715**	**0.002**	**7.653**
11	GULBARGA-II	BILWARA	33/11KV	BILWARA	25	Chigaralli IBP Pump 25 KVA	0.13	0.14	0.01	SN5	2585	2620	35	0.001	9.687
										SN14	1124	1158	34		
										SN24	6860	6890	30		
										SN26	2690	2725	35		
										SN27	3750	3757	7		
										SN33	1505	1538	33		
										SN35	2035	2070	35		
										SN39	217	225	8		
										SN36	2465	2489	24		
										SN37	419	427	8		
										SN38	4225	4259	34		
										SN40	1404	1450	46		
										SN41	1120	1189	69		
										SN42	1358	1394	36		
										SN43	730	892	162		
										SN12	825	850	25		
										SN15	2020	2055	35		

Sl. No.	Name of Division	Name of PSS	Voltage Level	Name of Outgoing 11 kV Feeder	Distribution Transformer Capacity in kVA/ 11 kV Bulk Consumer	Distribution Transformer Location-Code/ Bulk Consumer Location	A	B	C = B-A		D	E	F = E-D	G = C-∑F	
							Initial Meter Reading at LT side of DTR (LU)	Final Meter Reading at LT side of DTR (LU)	Energy Consumption at Destination end during nterval in LU	Consumer ID No. / Meter No.	Initial Meter Reading at Consumer side (U)	Final Meter Reading at Consumer side (U)	Energy Consumption at Destination end during Interval in Unit	LT Line Loss in LU	% of LT Loss w.r.t Input Energy
										SN25	5820	5855	35		
										SN11	150	165	15		
										SN2	1428	1460	32		
										SN4	899	940	41		
										SN17	2621	2650	29		
										SN6678	5330	5310	-20		
										SN1	114	128	14		
										SN16	182	196	14		
										SN8118	147	158	11		
										SN16407	3610	3650	40		
Sub-Total 11									**0.01**				**867**	**0.001**	**9.687**
Gulbarga -II Division Total [Sub-Total 1 to 11]									**0.56**	**Total LT Line Loss w.r.t. Input Energy in LU**				**0.051**	**9.151**
Total Energy at DTR side of Gulbarga Circle (Energy Input at 11 kV side at PSS - Energy Loss in 11 kV Feeders)									**1170.15**	**Gulbarga Circle LT Line Loss w.r.t. Total Input Energy (11 kV side)**				**107.076**	**9.151**
Gulbarga Circle 11 kV side Input Energy									**1233.05**	**Gulbarga Circle LT Line Loss w.r.t. Total Input Energy (11 kV side)**				**107.076**	**8.684**

LT LINE LOSS ASSESSMENT DETAIL
OF
CHIKKODI CIRCLE
IN
KARNATAKA STATE

D) LT LINE LOSS & COMMERCIAL LOSS DUT TO THEFT ASSESSMENT DETAIL OF CHIKODI CIRCLE

Sl.No.	Name of Division	Name of PSS	Voltage Level	Name Out going 11 KV feeder	Distribution Transformer Capacity in KVA/11KV Bulk Consumer	Distribution Transformer Location-Code/Bulk Consumer Location.	A	B	C=B-A		D	E	F=E-D	G=C-∑F	
							Initial meter reading at LT side of DTR (LU)	Final meter reading at LT side of DTR (LU)	Energy consumption at destination end during interval in LU.	Consumer ID no/Meter no	Initial meter reading at Consumer side (U)	Final meter reading at consumer side (U)	Energy consumption at destination end during interval in Unit	LT with Commercial loss in LU	% of LT loss w.r.t Input energy
1	CHIKKODI	110/33/11 KV SADALGA	33/11	11KV SADALGA FEEDER	63	KEB Colony	0.86	0.88	0.02	BHJ1012			10	0.001	6.207
										BHJ1017			5		
										BHJ1023			9		
										BHJ1030			5		
										BHJ1057			8		
										BHJ1059			10		
										BHJ1061			4		
										BHJ1062			23		
										BHJ1067			26		
										BHJ1079			8		
										BHJ1081			14		
										BHJ1109			12		
										BHJ1115			24		
										BHJ1116			5		
										BHJ1168			20		
										BHJ1184			8		
										BHJ1228			9		
										BHJ1251			6		
										BHJ1265			26		
										BHJ1266			12		
										BHJ1338			16		
										BHJ1378			1		
										BHJ1382			23		
										BHJ1399			8		
										BHJ1400			6		
										BHJ1461			14		
										BHJ1473			15		
										BHJ1484			11		
										BHJ1487			5		
										BHJ1496			15		
										BHJ1517			41		
										BHJ1527			23		
										BHJ15276			5		
										BHJ15278			24		
										BHJ15282			12		
										BHJ15287			18		

Sl.No.	Name of Division	Name of PSS	Voltage Level	Name Out going 11 KV feeder	Distribution Transformer Capacity in KVA/11KV Bulk Consumer	Distribution Transformer Location-Code/Bulk Consumer Location.	A	B	C=B-A		D	E	F=E-D	G=C-∑F	
							Initial meter reading at LT side of DTR (LU)	Final meter reading at LT side of DTR (LU)	Energy consumption at destination end during interval in LU.	Consumer ID no/Meter no	Initial meter reading at Consumer side (U)	Final meter reading at consumer side (U)	Energy consumption at destination end during interval in Unit	LT with Commercial loss in LU	% of LT loss w.r.t Input energy
										BHJ15290			7		
										BHJ15291			12		
										BHJ15292			13		
										BHJ15296			14		
										BHJ1558			12		
										BHJ1566			7		
										BHJ1588			9		
										BHJ1589			22		
										BHJ1595			9		
										BHJ1605			26		
										BHJ1606			17		
										BHJ1612			22		
										BHJ1623			2		
										BHJ1641			26		
										BHJ1642			37		
										BHJ1645			25		
										BHJ1648			19		
										BHJ1668			24		
										BHJ1713			29		
										BHJ1714			26		
										BHJ1715			37		
										BHJ1738			38		
										BHJ1745			23		
										BHJ1759			12		
										BHJ1809			30		
										BHJ18201			17		
										BHJ1821			20		
										BHJ1839			22		
										BHJ1889			14		
										BHJ19008			20		
										BHJ19011			28		
										BHJ19036			15		
										BHJ19039			18		
										BHJ19040			28		
										BHJ1909			18		
										BHJ1921			18		
										BHJ1934			11		
										BHJ1951			38		
										BHJ1952			8		
										BHJ1953			20		
										BHJ1960			22		

Sl.No.	Name of Division	Name of PSS	Voltage Level	Name Out going 11 KV feeder	Distribution Transformer Capacity in KVA/11KV Bulk Consumer	Distribution Transformer Location-Code/Bulk Consumer Location.	A	B	C=B-A	Consumer ID no/Meter no	D	E	F=E-D	G=C-∑F	% of LT loss w.r.t Input energy
							Initial meter reading at LT side of DTR (LU)	Final meter reading at LT side of DTR (LU)	Energy consumption at destination end during interval in LU.		Initial meter reading at Consumer side (U)	Final meter reading at consumer side (U)	Energy consumption at destination end during interval in Unit	LT with Commercial loss in LU	
										BHJ1982			30		
										BHJ1997			24		
										BHJ2020			37		
										BHJ2028			38		
										BHJ2033			12		
										BHJ2034			15		
										BHJ2037			13		
										BHJ2056			8		
										BHJ2057			7		
										BHJ2074			12		
										BHJ2077			4		
										BHJ2080			9		
										BHJ2092			8		
										BHJ2093			6		
										BHJ2104			1		
										BHJ2117			11		
										BHJ2118			12		
										BHJ2127			9		
										BHJ2144			4		
										BHJ2165			6		
										BHJ2173			8		
										BHJ2201			14		
										BHJ2217			6		
										BHJ22624			5		
										BHJ22626			9		
										BHJ22632			13		
										BHJ22733			3		
										BHJ23537			5		
										BHJ23538			7		
										BHJ23681			10		
										BHJ25632			3		
										BHJ25633			11		
										BHJ28082			8		
										BHJ28084			13		
										BHJ285			1		
										BHJ29131			7		
										BHJ29170			8		
										BHJ29206			11		
										BHJ29252			8		
										BHJ29257			11		
										BHJ29262			14		

Sl.No.	Name of Division	Name of PSS	Voltage Level	Name Out going 11 KV feeder	Distribution Transformer Capacity in KVA/11KV Bulk Consumer	Distribution Transformer Location-Code/Bulk Consumer Location.	A	B	C=B-A	Consumer ID no/Meter no	D	E	F=E-D	G=C-∑F	% of LT loss w.r.t Input energy
							Initial meter reading at LT side of DTR (LU)	Final meter reading at LT side of DTR (LU)	Energy consumption at destination end during interval in LU.		Initial meter reading at Consumer side (U)	Final meter reading at consumer side (U)	Energy consumption at destination end during interval in Unit	LT with Commercial loss in LU	
										BHJ29310			12		
										BHJ31127			5		
										BHJ31132			6		
										BHJ31134			9		
										BHJ31136			8		
										BHJ31137			4		
										BHJ31190			21		
										BHJ31192			6		
										BHJ31193			14		
										BHJ32797			5		
										BHJ32851			7		
										BHJ32923			8		
										BHJ33036			5		
										BHJ33125			9		
										BHJ34545			2		
										BHJ34574			18		
										BHJ34655			9		
										BHJ34656			4		
Sub-Total 1							**0.86**	**0.88**	**0.02**				**1,889**	**0.001**	**6.207**
2	CHIKKODI	110/33/11 KV	33/11	11KV	63	Bajirao Plot	2.34	2.36	0.03	SDG22093			74	0.001	3.908
										SDG1737			75		
										SDG2561			15		
										SDG26719			39		
										SDG2697			35		
										SDG2904			52		
										SDG24351			79		
										SDG2470			51		
										SDG2762			24		
										SDG2641			40		
										SDG2409			9		
										SDG2675			25		
										SDG2382			20		
										SDG2152			57		
										SDG2560			139		
										SDG2916			30		
										SDG15489			45		
										SDG2518			55		
										SDG15408			33		
										SDG26760			7		

Sl.No.	Name of Division	Name of PSS	Voltage Level	Name Out going 11 KV feeder	Distribution Transformer Capacity in KVA/11KV Bulk Consumer	Distribution Transformer Location-Code/Bulk Consumer Location.	A	B	C=B-A	Consumer ID no/Meter no	D	E	F=E-D	G=C-∑F	% of LT loss w.r.t Input energy
							Initial meter reading at LT side of DTR (LU)	Final meter reading at LT side of DTR (LU)	Energy consumption at destination end during interval in LU.		Initial meter reading at Consumer side (U)	Final meter reading at consumer side (U)	Energy consumption at destination end during interval in Unit	LT with Commercial loss in LU	
										SDG19600			18		
										SDG31382			4		
										SDG19601			58		
										SDG27387			57		
										SDG2278			26		
										SDG2590			13		
										SDG2971			27		
										SDG19700			43		
										SDG2970			144		
										SDG2972			36		
										SDG2983			41		
										SDG23023			35		
										SDG26792			28		
										SDG31374			35		
										SDG26808			53		
										SDG31218			7		
										SDG31219			30		
										SDG2639			67		
										SDG37521			22		
										SDG37482			33		
										SDG37050			42		
										SDG2840			37		
										SDG1718			82		
										SDG2759			82		
										SDG26798			9		
										SDG41678			54		
										SDG41677			20		
										SDG41679			15		
										SDG41879			0		
										SDG40611			14		
										SDG40610			27		
										SDG35433			38		
										SDG35432			131		
										SDG34303			14		
										SDG34079			0		
										SDG34302			28		
										SDG34078			99		
										SDG33647			78		
										SDG44109			26		
										SDG45968			17		

Sl.No.	Name of Division	Name of PSS	Voltage Level	Name Out going 11 KV feeder	Distribution Transformer Capacity in KVA/11KV Bulk Consumer	Distribution Transformer Location-Code/Bulk Consumer Location.	A	B	C=B-A	Consumer ID no/Meter no	D	E	F=E-D	G=C-∑F	% of LT loss w.r.t Input energy
							Initial meter reading at LT side of DTR (LU)	Final meter reading at LT side of DTR (LU)	Energy consumption at destination end during interval in LU.		Initial meter reading at Consumer side (U)	Final meter reading at consumer side (U)	Energy consumption at destination end during interval in Unit	LT with Commercial loss in LU	
										SDG47106			29		
										SDG2450			6		
										SDG45447			122		
										SDG45104			54		
Sub-Total 2							**2.34**	**2.36**	**0.03**				**2,705**	**0.001**	**3.908**
3	CHIKKODI	110/33/11 KV	33/11	11KV	100	Samagar	8.41	8.49	0.08	SDG36100			68	0.005	6.339
										SDG44250			42		
										SDG43122			28		
										SDG45570			6		
										SDG15488			79		
										SDG2524			2		
										SDG35171			27		
										SDG35164			29		
										SDG35255			21		
										SDG35068			73		
										SDG33661			17		
										SDG33662			27		
										SDG38484			37		
										SDG38473			10		
										SDG38743			31		
										SDG38744			55		
										SDG38426			14		
										SDG41578			52		
										SDG27085			1		
										SDG28990			26		
										SDG26708			13		
										SDG32171			16		
										SDG32057			53		
										SDG27414			1		
										SDG2472			48		
										SDG26773			34		
										SDG1942			36		
										SDG24966			76		
										SDG27093			82		
										SDG1793			8		
										SDG808			32		
										SDG2229			36		
										SDG331			6		
										SDG1212			75		
										SDG2268			24		

Sl.No.	Name of Division	Name of PSS	Voltage Level	Name Out going 11 KV feeder	Distribution Transformer Capacity in KVA/11KV Bulk Consumer	Distribution Transformer Location-Code/Bulk Consumer Location.	A	B	C=B-A		D	E	F=E-D	G=C-∑F	
							Initial meter reading at LT side of DTR (LU)	Final meter reading at LT side of DTR (LU)	Energy consumption at destination end during interval in LU.	Consumer ID no/Meter no	Initial meter reading at Consumer side (U)	Final meter reading at consumer side (U)	Energy consumption at destination end during interval in Unit	LT with Commercial loss in LU	% of LT loss w.r.t Input energy
										SDG26400			46		
										SDG2096			1		
										SDG27393			21		
										SDG2149			68		
										SDG2119			32		
										SDG2022			6		
										SDG1918			50		
										SDG75			36		
										SDG2807			20		
										SDG2267			44		
										SDG508			57		
										SDG26409			43		
										SDG24350			30		
										SDG86			83		
										SDG1698			38		
										SDG1401			44		
										SDG172			85		
										SDG1688			39		
										SDG1275			96		
										SDG1725			0		
										SDG31224			157		
										SDG1845			29		
										SDG2146			71		
										SDG2611			52		
										SDG147			133		
										SDG1144			69		
										SDG161			52		
										SDG1867			46		
										SDG639			16		
										SDG105			92		
										SDG26393			33		
										SDG1104			42		
										SDG2332			15		
										SDG584			25		
										SDG2985			59		
										SDG2468			29		
										SDG2299			27		
										SDG27260			0		
										SDG1393			83		
										SDG1090			21		
										SDG1556			46		

Sl.No.	Name of Division	Name of PSS	Voltage Level	Name Out going 11 KV feeder	Distribution Transformer Capacity in KVA/11KV Bulk Consumer	Distribution Transformer Location-Code/Bulk Consumer Location.	A	B	C=B-A	Consumer ID no/Meter no	D	E	F=E-D	G=C-∑F	% of LT loss w.r.t Input energy
							Initial meter reading at LT side of DTR (LU)	Final meter reading at LT side of DTR (LU)	Energy consumption at destination end during interval in LU.		Initial meter reading at Consumer side (U)	Final meter reading at consumer side (U)	Energy consumption at destination end during interval in Unit	LT with Commercial loss in LU	
										SDG1383			84		
										SDG330			39		
										SDG1071			0		
										SDG2801			36		
										SDG323			76		
										SDG884			52		
										SDG26396			28		
										SDG2245			67		
										SDG2744			47		
										SDG1990			40		
										SDG18763			60		
										SDG2846			0		
										SDG860			65		
										SDG31216			44		
										SDG453			29		
										SDG1230			29		
										SDG26951			34		
										SDG26948			20		
										SDG2842			37		
										SDG2272			14		
										SDG823			45		
										SDG27196			68		
										SDG1020			59		
										SDG1181			53		
										SDG814			45		
										SDG1915			36		
										SDG69			32		
										SDG820			1		
										SDG753			66		
										SDG1076			27		
										SDG1475			19		
										SDG2348			39		
										SDG30056			41		
										SDG2841			156		
										SDG118			49		
										SDG26953			33		
										SDG2782			0		
										SDG18707			74		
										SDG31383			59		
										SDG29953			26		
										SDG646			23		

Sl.No.	Name of Division	Name of PSS	Voltage Level	Name Out going 11 KV feeder	Distribution Transformer Capacity in KVA/11KV Bulk Consumer	Distribution Transformer Location-Code/Bulk Consumer Location.	A	B	C=B-A		D	E	F=E-D	G=C-∑F	
							Initial meter reading at LT side of DTR (LU)	Final meter reading at LT side of DTR (LU)	Energy consumption at destination end during interval in LU.	Consumer ID no/Meter no	Initial meter reading at Consumer side (U)	Final meter reading at consumer side (U)	Energy consumption at destination end during interval in Unit	LT with Commercial loss in LU	% of LT loss w.r.t Input energy
										SDG26721			26		
										SDG26535			19		
										SDG28744			35		
										SDG2849			56		
										SDG22545			86		
										SDG3000			58		
										SDG2444			71		
										SDG1696			22		
										SDG22473			50		
										SDG2827			38		
										SDG1304			16		
										SDG2072			39		
										SDG593			73		
										SDG22240			1		
										SDG1065			1		
										SDG319			53		
										SDG512			144		
										SDG1861			32		
										SDG2749			16		
										SDG24323			62		
										SDG1914			1		
										SDG1018			0		
										SDG2568			82		
										SDG1443			5		
										SDG27089			24		
										SDG2154			50		
										SDG19830			34		
										SDG2074			0		
										SDG26945			13		
										SDG29935			1		
										SDG23805			0		
										SDG24458			63		
										SDG2899			38		
										SDG2709			11		
										SDG677			33		
										SDG1155			59		
										SDG24967			64		
										SDG22243			35		
										SDG1824			70		
										SDG1264			40		
										SDG154			75		

Sl.No.	Name of Division	Name of PSS	Voltage Level	Name Out going 11 KV feeder	Distribution Transformer Capacity in KVA/11KV Bulk Consumer	Distribution Transformer Location-Code/Bulk Consumer Location.	A	B	C=B-A	Consumer ID no/Meter no	D	E	F=E-D	G=C-∑F	% of LT loss w.r.t Input energy
							Initial meter reading at LT side of DTR (LU)	Final meter reading at LT side of DTR (LU)	Energy consumption at destination end during interval in LU.		Initial meter reading at Consumer side (U)	Final meter reading at consumer side (U)	Energy consumption at destination end during interval in Unit	LT with Commercial loss in LU	
										SDG532			20		
										SDG1438			22		
										SDG527			41		
										SDG329			52		
										SDG31786			53		
										SDG35543			26		
										SDG35426			20		
										SDG35307			63		
										SDG27262			4		
										SDG26746			0		
										SDG36753			2		
										SDG36860			51		
										SDG36153			76		
										SDG37495			85		
										SDG37550			95		
										SDG37042			64		
										SDG37622			19		
										SDG24968			96		
										SDG38499			400		
										SDG38562			6		
										SDG35474			1		
										SDG39903			20		
										SDG32167			4		
										SDG27094			3		
										SDG362			0		
										SDG37491			0		
										SDG27469			3		
										SDG34617			16		
										SDG2834			2		
Sub-Total 3							**8.41**	**8.49**	**0.08**				**7,713**	**0.005**	**6.339**
4	CHIKKODI	110/33/11 KV	33/11	11KV	100	Bhoje	8.61	8.72	0.10	SDG2656			82	0.007	6.600
										SDG1843			0		
										SDG1454			111		
										SDG24976			25		
										SDG963			27		
										SDG17904			28		
										SDG555			59		
										SDG2375			31		
										SDG1844			59		
										SDG925			150		

Sl.No.	Name of Division	Name of PSS	Voltage Level	Name Out going 11 KV feeder	Distribution Transformer Capacity in KVA/11KV Bulk Consumer	Distribution Transformer Location-Code/Bulk Consumer Location.	A	B	C=B-A	Consumer ID no/Meter no	D	E	F=E-D	G=C-∑F	% of LT loss w.r.t Input energy
							Initial meter reading at LT side of DTR (LU)	Final meter reading at LT side of DTR (LU)	Energy consumption at destination end during interval in LU.		Initial meter reading at Consumer side (U)	Final meter reading at consumer side (U)	Energy consumption at destination end during interval in Unit	LT with Commercial loss in LU	
										SDG2098			37		
										SDG2950			41		
										SDG867			17		
										SDG344			51		
										SDG2954			36		
										SDG2151			24		
										SDG2330			87		
										SDG1251			49		
										SDG1384			4		
										SDG450			104		
										SDG242			61		
										SDG511			130		
										SDG20			239		
										SDG128			10		
										SDG26438			12		
										SDG517			56		
										SDG2677			60		
										SDG1943			60		
										SDG19511			43		
										SDG26476			71		
										SDG26486			4		
										SDG928			77		
										SDG19810			44		
										SDG1028			28		
										SDG336			39		
										SDG2128			52		
										SDG1263			41		
										SDG23022			54		
										SDG26954			20		
										SDG246			32		
										SDG670			63		
										SDG2854			37		
										SDG1111			53		
										SDG2663			42		
										SDG1823			42		
										SDG2837			54		
										SDG474			34		
										SDG2508			94		
										SDG1828			62		
										SDG1830			4		
										SDG1632			69		

Sl.No.	Name of Division	Name of PSS	Voltage Level	Name Out going 11 KV feeder	Distribution Transformer Capacity in KVA/11KV Bulk Consumer	Distribution Transformer Location-Code/Bulk Consumer Location.	A	B	C=B-A		D	E	F=E-D	G=C-∑F	
							Initial meter reading at LT side of DTR (LU)	Final meter reading at LT side of DTR (LU)	Energy consumption at destination end during interval in LU.	Consumer ID no/Meter no	Initial meter reading at Consumer side (U)	Final meter reading at consumer side (U)	Energy consumption at destination end during interval in Unit	LT with Commercial loss in LU	% of LT loss w.r.t Input energy
										SDG2142			56		
										SDG959			60		
										SDG1175			42		
										SDG1345			43		
										SDG15512			1		
										SDG2259			122		
										SDG2205			38		
										SDG35620			3		
										SDG1375			17		
										SDG2317			13		
										SDG27483			109		
										SDG932			36		
										SDG582			18		
										SDG1586			32		
										SDG1863			28		
										SDG748			65		
										SDG2300			11		
										SDG2051			94		
										SDG26372			82		
										SDG18764			17		
										SDG15499			42		
										SDG2654			49		
										SDG704			35		
										SDG2661			52		
										SDG2565			59		
										SDG338			39		
										SDG1575			109		
										SDG37785			4		
										SDG37503			26		
										SDG37611			48		
										SDG36596			1		
										SDG36792			15		
										SDG2150			7		
										SDG1720			175		
										SDG26788			24		
										SDG1035			54		
										SDG1593			35		
										SDG85			32		
										SDG1130			16		
										SDG2913			74		
										SDG2140			59		

Sl.No.	Name of Division	Name of PSS	Voltage Level	Name Out going 11 KV feeder	Distribution Transformer Capacity in KVA/11KV Bulk Consumer	Distribution Transformer Location-Code/Bulk Consumer Location.	A	B	C=B-A		D	E	F=E-D	G=C-∑F	
							Initial meter reading at LT side of DTR (LU)	Final meter reading at LT side of DTR (LU)	Energy consumption at destination end during interval in LU.	Consumer ID no/Meter no	Initial meter reading at Consumer side (U)	Final meter reading at consumer side (U)	Energy consumption at destination end during interval in Unit	LT with Commercial loss in LU	% of LT loss w.r.t Input energy
										SDG1620			60		
										SDG2798			1		
										SDG26472			40		
										SDG1752			30		
										SDG1910			61		
										SDG2385			8		
										SDG18482			6		
										SDG2360			4		
										SDG2327			0		
										SDG2037			5		
										SDG117			0		
										SDG320			0		
										SDG2640			17		
										SDG15405			27		
										SDG22070			0		
										SDG2220			26		
										SDG1309			84		
										SDG1031			75		
										SDG2851			8		
										SDG1255			79		
										SDG2262			3		
										SDG984			75		
										SDG107			10		
										SDG1558			8		
										SDG22544			9		
										SDG22469			59		
										SDG2170			48		
										SDG27410			31		
										SDG2036			18		
										SDG991			39		
										SDG2825			43		
										SDG1140			42		
										SDG1716			63		
										SDG709			66		
										SDG26957			56		
										SDG964			66		
										SDG1546			3		
										SDG2955			24		
										SDG1633			30		
										SDG1381			35		
										SDG1622			38		

Sl.No.	Name of Division	Name of PSS	Voltage Level	Name Out going 11 KV feeder	Distribution Transformer Capacity in KVA/11KV Bulk Consumer	Distribution Transformer Location-Code/Bulk Consumer Location.	A	B	C=B-A		D	E	F=E-D	G=C-∑F	
							Initial meter reading at LT side of DTR (LU)	Final meter reading at LT side of DTR (LU)	Energy consumption at destination end during interval in LU.	Consumer ID no/Meter no	Initial meter reading at Consumer side (U)	Final meter reading at consumer side (U)	Energy consumption at destination end during interval in Unit	LT with Commercial loss in LU	% of LT loss w.r.t Input energy
										SDG460			4		
										SDG22253			6		
										SDG19834			52		
										SDG40528			56		
										SDG40756			0		
										SDG42293			25		
										SDG42373			0		
										SDG41773			26		
										SDG33607			53		
										SDG38506			8		
										SDG35384			75		
										SDG38507			13		
										SDG38734			8		
										SDG38642			58		
										SDG2207			27		
										SDG1919			71		
										SDG1501			42		
										SDG696			49		
										SDG265			4		
										SDG33608			19		
										SDG43082			8		
										SDG2264			125		
										SDG2368			33		
										SDG144			105		
										SDG2320			101		
										SDG378			109		
										SDG509			43		
										SDG55			93		
										SDG2030			144		
										SDG2141			145		
										SDG2748			279		
										SDG42192			1		
										SDG41674			89		
										SDG35163			73		
										SDG33705			156		
										SDG41			96		
										SDG1627			90		
										SDG43581			51		
										SDG43541			101		
										SDG35281			8		
										SDG38542			44		

Sl.No.	Name of Division	Name of PSS	Voltage Level	Name Out going 11 KV feeder	Distribution Transformer Capacity in KVA/11KV Bulk Consumer	Distribution Transformer Location-Code/Bulk Consumer Location.	A Initial meter reading at LT side of DTR (LU)	B Final meter reading at LT side of DTR (LU)	C=B-A Energy consumption at destination end during interval in LU.	Consumer ID no/Meter no	D Initial meter reading at Consumer side (U)	E Final meter reading at consumer side (U)	F=E-D Energy consumption at destination end during interval in Unit	G=C-∑F LT with Commercial loss in LU	% of LT loss w.r.t Input energy
										SDG35100			27		
										SDG38239			7		
										SDG41712			26		
										SDG32183			0		
										SDG3002			46		
										SDG32198			614		
										SDG26938			3		
										SDG27459			0		
										SDG18194			4		
										SDG34539			90		
										SDG26700			23		
										SDG26940			9		
										SDG23398			32		
										SDG977			6		
										SDG23018			2		
										SDG22548			0		
										SDG708			2		
										SDG2027			39		
										SDG2461			121		
										SDG2031			8		
										SDG356			12		
										SDG2832			5		
										SDG1759			8		
										SDG2612			10		
										SDG1406			13		
										SDG581			1		
										SDG430			4		
										SDG26431			13		
										SDG42972			1		
										SDGMP2393			32		
										SDGMP34292			22		
										SDGMP42019			34		
Sub-Total 4							**8.61**	**8.72**	**0.10**				**9552**	**0.007**	**6.600**
TOTAL (Sub-Total 1 to 4)									**0.23**	**Total LT Line Loss w.r.t. Input Energy in LU**				**0.014**	**6.148**
Toatl Energy at DTR side of Chikkodi Circle (Energy Input at 11 kV side at PSS - Energy Loss in 11 kV Feeders)									**1103.05**	**Chikkodi Circle LT Line Loss w.r.t. Total Input Energy (11 kV side)**				**67.819**	**6.148**
Chikkodi Circle 11 kV side Input Energy									**1164.28**	**Chikkodi Circle LT Line Loss w.r.t. Total Input Energy (11 kV side)**				**67.819**	**5.825**

LT LINE LOSS & COMMERCIAL LOSS DUE TO THEFT ASSESSMENT DETAIL OF BANGLORE SOUTH CIRCLE IN KARNATAKA STATE

STUDY ON COMPONENT-WISE AT&C LOSSES ASSESSMENT FOR THE STATE OF KARNATAKA

D) LT LINE LOSS & COMMERCIAL LOSS DUT TO THEFT ASSESSMENT DETAIL OF BANGALORE SOUTH CIRCLE

Sl. No.	Name of Division	Name of PSS	Voltage Level	Name of Outgoing 11 kV Feeder	Distribution Transformer Capacity in KVA/ 11 kV Bulk Consumer	Distribution Transformer Location Code/ Bulk Consumer Location	A	B	C=B-A		D	E	F=E-D	G=C-∑F	
							Initial Meter Reading at LT side of DTR (LU)	Final Meter Reading at LT side of DTR (LU)	Energy Consumption at destination end during interval in LU	Consumer ID No./ Meter No.	Initial Meter Reading at Consumer side (U)	Final Meter Reading at Consumer side (U)	Energy Consumption at destination end during interval in Unit	LT Line Loss in LU	% of LT Loss w.r.t Input Energy
1	JAYANAGAR	P.B. Nagar	66/11 KV	11 KV F -12 Feeder	250	TC-94/BRIGADE MMRMU TC/250	28.393	28.588	0.196	1S12916	13528	13692	164	0.019	9.628
										1S12917	609	847	238		
										1S12931	3464	3540	76		
										1S18264	8580	8629	49		
										1S2006	2953	3002	49		
										1S23196	361	412	51		
										1S23197	3162	3251	89		
										1S23198	913	958	45		
										1S24434	6671	6729	58		
										1S26374	3444	3465	21		
										1S2679	691	775	84		
										1S27259	392	417	25		
										1S32742	6090	6133	43		
										1S35929	1325	1488	163		
										1S36961	2444	2512	68		
										1S36962	3714	3751	37		
										1S39138	1090	1174	84		
										1S39139	18838	18955	117		
										1S39545	14900	15096	196		
										1S40914	4535	4721	186		
										1S40915	16485	16525	40		
										1S40916	11640	11715	75		
										1S40917	5672	5813	141		
										1S40918	1680	1721	41		
										1S4276	8653	8691	38		
										1S46212	18083	18228	145		
										1S47364	1079	1173	94		
										1S47931	2591	2592	1		
										1S47932	8143	8242	99		
										1S48029	2827	2989	162		
										1S48030	1228	1332	104		
										1S48165	12680	12835	155		
										1S48300	8774	8927	153		
										1S48301	5402	5602	200		
										1S48366	989	1033	44		
										1S48367	8320	8414	94		

Sl. No.	Name of Division	Name of PSS	Voltage Level	Name of Outgoing 11 kV Feeder	Distribution Transformer Capacity in KVA/ 11 kV Bulk Consumer	Distribution Transformer Location Code/ Bulk Consumer Location	A	B	C=B-A		D	E	F=E-D	G=C-∑F	
							Initial Meter Reading at LT side of DTR (LU)	Final Meter Reading at LT side of DTR (LU)	Energy Consumption at destination end during interval in LU	Consumer ID No./ Meter No.	Initial Meter Reading at Consumer side (U)	Final Meter Reading at Consumer side (U)	Energy Consumption at destination end during interval in Unit	LT Line Loss in LU	% of LT Loss w.r.t Input Energy
										1S49342	7836	7882	46		
										1S50474	8204	8275	71		
										1S52090	2198	2257	59		
										1S54187	4251	4450	199		
										1S54431	4782	4826	44		
										1S54432	10727	10889	162		
										1S54768	4941	5201	260		
										1S55540	8720	8798	78		
										1S55541	29268	29718	450		
										1S56110	1064	1084	20		
										1S56111	629	634	5		
										1S58391	1436	1450	14		
										1SH14205	11062	11191	129		
										1SH14494	2957	2986	29		
										1SH14495	2568	2589	21		
										1SH14496	4629	4702	73		
										1SH14829	625	680	55		
										1SH17015	22062	22650	588		
										1SH17437	851	882	31		
										1SH19892	10140	10275	135		
										1SH21994	5093	5259	166		
										1SH22773	901	947	46		
										1SH22774	1617	1745	128		
										1SH23035	3381	3490	109		
										1SH23036	691	719	28		
										1SH27728	14908	14981	73		
										1SH27729	1576	1721	145		
										1SH27730	1084	1126	42		
										1SH27731	959	1056	97		
										1SH27889	1132	1199	67		
										1SH27890	171	181	10		
										1SH27891	320	352	32		
										1SH27892	1583	1698	115		
										1SH27970	4438	4677	239		
										1SH27971	954	1030	76		
										1SH28467	1561	1640	79		
										1SH28468	958	1030	72		
										1SH28469	225	368	143		
										1SH28524	5585	5702	117		
										1SH29049	6686	7067	381		
										1SH31518	1709	1861	152		

Sl. No.	Name of Division	Name of PSS	Voltage Level	Name of Outgoing 11 kV Feeder	Distribution Transformer Capacity in KVA/ 11 kV Bulk Consumer	Distribution Transformer Location Code/ Bulk Consumer Location	A	B	C=B-A		D	E	F=E-D	G=C-∑F	
							Initial Meter Reading at LT side of DTR (LU)	Final Meter Reading at LT side of DTR (LU)	Energy Consumption at destination end during interval in LU	Consumer ID No./ Meter No.	Initial Meter Reading at Consumer side (U)	Final Meter Reading at Consumer side (U)	Energy Consumption at destination end during interval in Unit	LT Line Loss in LU	% of LT Loss w.r.t Input Energy
										1SH37460	168	242	74		
										1SH37461	3312	3440	128		
										1SH38016	626	660	34		
										1SH38017	2254	2268	14		
										1SH38018	916	945	29		
										1SH38019	9365	9487	122		
										1SH38085	3034	3288	254		
										1SH38242	5593	5731	138		
										1SH38243	646	696	50		
										1SH38244	12606	12736	130		
										1SH38245	1092	1129	37		
										1SH38246	2345	2407	62		
										1SH38247	2258	2269	11		
										1SH38248	773	835	62		
										1SH38249	1923	2051	128		
										1SH38250	2067	2213	146		
										1SH38648	343	370	27		
										1SH39743	7177	7370	193		
										1SH39744	2512	2517	5		
										1SH39745	2198	2339	141		
										1SH40272	10916	10982	66		
										1SH40273	20278	20335	57		
										1SH40274	42855	43166	311		
										1SH40448	8181	8336	155		
										1SH40465	35069	35354	285		
										1SH40733	2700	2878	178		
										1SH40734	21668	22007	339		
										1SH40735	13132	13659	527		
										1SH40957	2653	2799	146		
										1SH40958	1792	1940	148		
										1SH41360	13600	13667	67		
										1SH42428	3528	3536	8		
										1SH43333	10216	10321	105		
										1SH43334	14397	14580	183		
										1SH43335	14160	14312	152		
										1SH43336	8728	8814	86		
										1SH43337	21541	21649	108		
										1SH43338	21046	21189	143		
										1SH43599	25510	25728	218		
										1SH45272	7824	7896	72		
										1SH45273	11837	11929	92		

Sl. No.	Name of Division	Name of PSS	Voltage Level	Name of Outgoing 11 kV Feeder	Distribution Transformer Capacity in KVA/ 11 kV Bulk Consumer	Distribution Transformer Location Code/ Bulk Consumer Location	A	B	C=B-A		D	E	F=E-D	G=C-∑F	
							Initial Meter Reading at LT side of DTR (LU)	Final Meter Reading at LT side of DTR (LU)	Energy Consumption at destination end during interval in LU	Consumer ID No./ Meter No.	Initial Meter Reading at Consumer side (U)	Final Meter Reading at Consumer side (U)	Energy Consumption at destination end during interval in Unit	LT Line Loss in LU	% of LT Loss w.r.t Input Energy
										1SH45346	19966	20153	187		
										1SH45347	14932	15094	162		
										1SH47094	24510	24831	321		
										1SH47095	3375	3393	18		
										1SH47707	4304	4373	69		
										1SH48935	11478	11489	11		
										1SH48936	14068	14338	270		
										1SH48937	11975	12055	80		
										1SH48938	3197	3259	62		
										1SH48951	8449	8521	72		
										1SH48952	3062	3095	33		
										1SH50344	7758	7829	71		
										1SH52715	5038	5044	6		
										1SH52716	1237	1259	22		
										1SH52717	5415	5549	134		
										1SH54020	2752	2760	8		
										1SH54021	2579	2587	8		
										1SH9320	741	829	88		
										1SH9441	3369	3382	13		
										1SH9442	52316	52628	312		
										1SH9459	17334	17540	206		
										1SP3566	1148	1165	17		
										1SP4654	10697	10805	108		
										MS1S57697	2792	2859	67		
										MS1S59121	608	610	2		
										MS1S59122	4003	4150	147		
										MS1SH51060	7679	7808	129		
										MS1SH51061	8713	8765	52		
										MS1SH51062	6763	6850	87		
										MS1SH51063	1708	1731	23		
										MS1SH53134	5268	5446	178		
										MS1SH53135	648	659	11		
										S1U3STL094	17923	18973	1050		
										SP5102	2349	2362	13		
										SP5409	24338	24539	201		
										SP5432	1357	1369	12		
Sub-Total (1)									**0.196**				**17684**	**0.019**	

Sl. No.	Name of Division	Name of PSS	Voltage Level	Name of Outgoing 11 kV Feeder	Distribution Transformer Capacity in KVA/ 11 kV Bulk Consumer	Distribution Transformer Location Code/ Bulk Consumer Location	A	B	C=B-A	Consumer ID No./ Meter No.	D	E	F=E-D	G=C-∑F	% of LT Loss w.r.t Input Energy
							Initial Meter Reading at LT side of DTR (LU)	Final Meter Reading at LT side of DTR (LU)	Energy Consumption at destination end during interval in LU		Initial Meter Reading at Consumer side (U)	Final Meter Reading at Consumer side (U)	Energy Consumption at destination end during interval in Unit	LT Line Loss in LU	
2	JAYANAGAR	P.B. Nagar	66/11 KV	11 KV F -12 Feeder	100	TC-118/SAKSHI APT/100	12.940	12.970	0.030	MS1SH49572	13989.00	14302.00	313	0.002	6.300
										MS1SH49573	10091.00	10371.00	280		
										MS1SH49574	17372.00	17658.00	286		
										MS1SH49575	11051.00	11223.00	172		
										MS1SH49576	8424.00	8524.00	100		
										MS1SH49577	10386.00	10624.00	238		
										MS1SH49578	29102.00	29584.00	482		
										MS1SH49579	5816.00	5858.00	42		
										MS1SH49580	15095.00	15310.00	215		
										MS1SH49581	27612.00	28295.00	683		
Sub-Total (2)									**0.030**				**2811**		
3	JAYANAGAR	P.B. Nagar	66/11 KV	11 KV F -12 Feeder	500	TC-120/JAIN APARTMENT-3/500	4.464	4.814	0.350	1S12695	15328	15503	175	0.024	6.947
										1S17488	10850	11126	276		
										1S18103	15476	15588	112		
										1S22394	189	399	210		
										1S22395	1692	1819	127		
										1S23766	1797	1954	157		
										1S23998	7014	7127	113		
										1S24061	6562	6619	57		
										1S24364	8718	8825	107		
										1S24602	996	1210	214		
										1S24603	445	471	26		
										1S24604	533	570	37		
										1S25110	1487	1599	112		
										1S25243	482	537	55		
										1S27718	992	1042	50		
										1S28059	6589	6684	95		
										1S28222	9044	9155	111		
										1S28905	24381	24607	226		
										1S32619	526	567	41		
										1S33536	5074	5094	20		
										1S33537	2362	2437	75		
										1S33891	2238	2441	203		
										1S35241	4084	4231	147		
										1S35242	4587	4631	44		
										1S35501	11409	11532	123		
										1S35508	10474	10547	73		
										1S36085	6115	6211	96		
										1S36406	8014	8157	143		
										1S36411	12815	12893	78		

Sl. No.	Name of Division	Name of PSS	Voltage Level	Name of Outgoing 11 kV Feeder	Distribution Transformer Capacity in KVA/ 11 kV Bulk Consumer	Distribution Transformer Location Code/ Bulk Consumer Location	A	B	C=B-A		D	E	F=E-D	G=C-∑F	
							Initial Meter Reading at LT side of DTR (LU)	Final Meter Reading at LT side of DTR (LU)	Energy Consumption at destination end during interval in LU	Consumer ID No./ Meter No.	Initial Meter Reading at Consumer side (U)	Final Meter Reading at Consumer side (U)	Energy Consumption at destination end during interval in Unit	LT Line Loss in LU	% of LT Loss w.r.t Input Energy
										1S36413	1600	1766	166		
										1S37721	1595	1710	115		
										1S40155	4704	4710	6		
										1S40684	7348	7438	90		
										1S40685	1807	1852	45		
										1S40687	2258	2269	11		
										1S42434	2232	2339	107		
										1S43037	13992	14139	147		
										1S43049	14787	14835	48		
										1S43050	3759	4005	246		
										1S43051	3824	3859	35		
										1S43205	36683	36790	107		
										1S43207	7954	8024	70		
										1S43208	1095	1161	66		
										1S43209	5881	5965	84		
										1S43210	5021	5087	66		
										1S43211	3378	3407	29		
										1S43212	3424	3443	19		
										1S43213	453	478	25		
										1S43214	1483	1510	27		
										1S43215	16726	16858	132		
										1S43216	894	984	90		
										1S43218	2974	3039	65		
										1S43219	708	822	114		
										1S43220	277	299	22		
										1S43221	114	129	15		
										1S43222	201	226	25		
										1S43223	1168	1216	48		
										1S43225	2063	2130	67		
										1S43226	1449	1554	105		
										1S43227	1161	1235	74		
										1S43228	163	185	22		
										1S43229	591	635	44		
										1S43234	67810	67862	52		
										1S43236	8131	8151	20		
										1S44167	535	573	38		
										1S4430	10608	10712	104		
										1S44524	2865	2970	105		
										1S44525	866	929	63		
										1S44923	1158	1169	11		
										1S44927	10168	10319	151		

Sl. No.	Name of Division	Name of PSS	Voltage Level	Name of Outgoing 11 kV Feeder	Distribution Transformer Capacity in KVA/ 11 kV Bulk Consumer	Distribution Transformer Location Code/ Bulk Consumer Location	A	B	C=B-A		D	E	F=E-D	G=C-∑F	
							Initial Meter Reading at LT side of DTR (LU)	Final Meter Reading at LT side of DTR (LU)	Energy Consumption at destination end during interval in LU	Consumer ID No./ Meter No.	Initial Meter Reading at Consumer side (U)	Final Meter Reading at Consumer side (U)	Energy Consumption at destination end during interval in Unit	LT Line Loss in LU	% of LT Loss w.r.t Input Energy
										1S44928	1136	1225	89		
										1S44929	234	250	16		
										1S44930	714	769	55		
										1S44931	391	423	32		
										1S44945	344	400	56		
										1S44946	3931	3990	59		
										1S44947	1347	1476	129		
										1S44949	411	453	42		
										1S44954	2	58	56		
										1S44955	33	59	26		
										1S45033	4823	4902	79		
										1S45035	1146	1243	97		
										1S45036	606	689	83		
										1S45037	51437	51452	15		
										1S45038	579	632	53		
										1S45039	901	1000	99		
										1S45040	1450	1665	215		
										1S45041	164	273	109		
										1S45042	425	450	25		
										1S45043	823	894	71		
										1S45061	16058	16120	62		
										1S45062	292	323	31		
										1S45063	627	688	61		
										1S45064	2593	2660	67		
										1S45065	5702	5764	62		
										1S45067	477	525	48		
										1S45068	3661	3688	27		
										1S45069	1546	1678	132		
										1S45070	649	695	46		
										1S45071	839	907	68		
										1S45081	1	1	0		
										1S45902	520	572	52		
										1S46099	949	1060	111		
										1S46100	466	507	41		
										1S46211	5524	5529	5		
										1S46415	1686	1838	152		
										1S46423	2420	2437	17		
										1S46563	526	551	25		
										1S47639	1684	1788	104		
										1S47640	794	847	53		
										1S47725	7648	7656	8		

Sl. No.	Name of Division	Name of PSS	Voltage Level	Name of Outgoing 11 kV Feeder	Distribution Transformer Capacity in KVA/ 11 kV Bulk Consumer	Distribution Transformer Location Code/ Bulk Consumer Location	A	B	C=B-A		D	E	F=E-D	G=C-∑F	
							Initial Meter Reading at LT side of DTR (LU)	Final Meter Reading at LT side of DTR (LU)	Energy Consumption at destination end during interval in LU	Consumer ID No./ Meter No.	Initial Meter Reading at Consumer side (U)	Final Meter Reading at Consumer side (U)	Energy Consumption at destination end during interval in Unit	LT Line Loss in LU	% of LT Loss w.r.t Input Energy
										1S47894	26465	26772	307		
										1S48613	17153	17249	96		
										1S48618	547	577	30		
										1S48624	2643	2760	117		
										1S48628	1671	1792	121		
										1S48632	6786	6788	2		
										1S48860	14507	14656	149		
										1S49748	13169	13330	161		
										1S49749	13022	13185	163		
										1S50238	4234	4266	32		
										1S50239	7920	8045	125		
										1S50259	6191	6224	33		
										1S50261	4519	4587	68		
										1S50262	9075	9117	42		
										1S50500	9869	9873	4		
										1S50720	5809	5883	74		
										1S50721	10833	10986	153		
										1S50722	9923	10041	118		
										1S50723	7243	7352	109		
										1S51142	499	500	1		
										1S51143	2808	2856	48		
										1S51144	8014	8048	34		
										1S51146	8051	8065	14		
										1S51148	2658	2659	1		
										1S51149	8310	8399	89		
										1S51150	3755	3801	46		
										1S51151	2178	2261	83		
										1S51152	4555	4600	45		
										1S51153	4658	4739	81		
										1S51154	3251	3296	45		
										1S51155	4961	5026	65		
										1S51156	2833	2848	15		
										1S51157	5123	5160	37		
										1S51158	4864	4913	49		
										1S51160	4041	4095	54		
										1S51162	6417	6481	64		
										1S51163	2464	2481	17		
										1S51478	4164	4203	39		
										1S51845	624	624	0		
										1S51850	6186	6228	42		
										1S52156	6381	6427	46		

Sl. No.	Name of Division	Name of PSS	Voltage Level	Name of Outgoing 11 kV Feeder	Distribution Transformer Capacity in KVA/ 11 kV Bulk Consumer	Distribution Transformer Location Code/ Bulk Consumer Location	A	B	C=B-A		D	E	F=E-D	G=C-∑F	
							Initial Meter Reading at LT side of DTR (LU)	Final Meter Reading at LT side of DTR (LU)	Energy Consumption at destination end during interval in LU	Consumer ID No./ Meter No.	Initial Meter Reading at Consumer side (U)	Final Meter Reading at Consumer side (U)	Energy Consumption at destination end during interval in Unit	LT Line Loss in LU	% of LT Loss w.r.t Input Energy
										1S53152	727	779	52		
										1S53157	28060	28168	108		
										1S53159	559	595	36		
										1S53650	3605	3623	18		
										1S53690	7718	7835	117		
										1S53691	6632	6703	71		
										1S53752	8566	8703	137		
										1S53886	4427	4487	60		
										1S54448	7755	7790	35		
										1S54709	1239	1252	13		
										1S54856	13576	13704	128		
										1S55567	8703	8728	25		
										1S55895	1384	1419	35		
										1S56193	5690	5783	93		
										1S57211	1399	1430	31		
										1S57662	4575	4649	74		
										1S57731	2647	2725	78		
										1S59767	9151	9317	166		
										1SH12202	2424	2632	208		
										1SH12471	2227	2376	149		
										1SH12498	1701	1804	103		
										1SH12926	3551	3789	238		
										1SH13097	19773	19918	145		
										1SH13115	1584	1606	22		
										1SH13152	12624	12833	209		
										1SH13153	11950	12054	104		
										1SH14058	35061	36093	1032		
										1SH14211	994	1134	140		
										1SH14212	8565	8637	72		
										1SH14393	30720	30872	152		
										1SH14436	2341	2442	101		
										1SH15395	22429	22510	81		
										1SH15641	20378	20580	202		
										1SH15761	1302	1397	95		
										1SH16115	31409	31674	265		
										1SH16640	2459	2669	210		
										1SH17250	1775	1890	115		
										1SH17724	3564	3843	279		
										1SH19224	18645	18761	116		
										1SH19815	13466	13633	167		
										1SH20617	1862	2032	170		

Sl. No.	Name of Division	Name of PSS	Voltage Level	Name of Outgoing 11 kV Feeder	Distribution Transformer Capacity in KVA/ 11 kV Bulk Consumer	Distribution Transformer Location Code/ Bulk Consumer Location	A	B	C=B-A		D	E	F=E-D	G=C-∑F	
							Initial Meter Reading at LT side of DTR (LU)	Final Meter Reading at LT side of DTR (LU)	Energy Consumption at destination end during interval in LU	Consumer ID No./ Meter No.	Initial Meter Reading at Consumer side (U)	Final Meter Reading at Consumer side (U)	Energy Consumption at destination end during interval in Unit	LT Line Loss in LU	% of LT Loss w.r.t Input Energy
										1SH20892	41693	42138	445		
										1SH20893	11200	11251	51		
										1SH20978	8661	8816	155		
										1SH21017	5298	5404	106		
										1SH21357	1855	2003	148		
										1SH21763	56361	56784	423		
										1SH22471	567	661	94		
										1SH22969	9082	9264	182		
										1SH23022	4112	4592	480		
										1SH2444	18830	19145	315		
										1SH24444	17481	17663	182		
										1SH24786	2178	2354	176		
										1SH2607	41227	41712	485		
										1SH26138	1625	1741	116		
										1SH26553	24657	24837	180		
										1SH26838	20745	20875	130		
										1SH28169	1140	1293	153		
										1SH28526	7028	7147	119		
										1SH29642	2241	2406	165		
										1SH31718	490	528	38		
										1SH31719	403	440	37		
										1SH31997	31014	31204	190		
										1SH34068	3806	3861	55		
										1SH34069	5723	6051	328		
										1SH34159	540	586	46		
										1SH34441	2338	2504	166		
										1SH35995	1040	1127	87		
										1SH36280	886	964	78		
										1SH36520	980	1078	98		
										1SH36915	529	564	35		
										1SH37052	24629	24789	160		
										1SH38327	10901	10991	90		
										1SH38544	3348	3620	272		
										1SH38772	1237	1317	80		
										1SH38780	15741	15977	236		
										1SH38781	1708	1914	206		
										1SH38782	943	1046	103		
										1SH38783	1701	1905	204		
										1SH39071	1109	1210	101		
										1SH39114	645	731	86		
										1SH39115	8317	8348	31		

Sl. No.	Name of Division	Name of PSS	Voltage Level	Name of Outgoing 11 kV Feeder	Distribution Transformer Capacity in KVA/ 11 kV Bulk Consumer	Distribution Transformer Location Code/ Bulk Consumer Location	A	B	C=B-A		D	E	F=E-D	G=C-∑F	
							Initial Meter Reading at LT side of DTR (LU)	Final Meter Reading at LT side of DTR (LU)	Energy Consumption at destination end during interval in LU	Consumer ID No./ Meter No.	Initial Meter Reading at Consumer side (U)	Final Meter Reading at Consumer side (U)	Energy Consumption at destination end during interval in Unit	LT Line Loss in LU	% of LT Loss w.r.t Input Energy
										1SH39116	418	458	40		
										1SH39428	7867	7992	125		
										1SH39709	46638	47491	853		
										1SH40176	1489	1492	3		
										1SH40410	1125	1207	82		
										1SH40629	493	518	25		
										1SH40630	1605	1763	158		
										1SH40636	3331	3606	275		
										1SH40637	4149	4492	343		
										1SH40638	3446	3707	261		
										1SH4071	1389	1540	151		
										1SH41186	3029	3179	150		
										1SH42294	911	1051	140		
										1SH42295	19146	19271	125		
										1SH42530	15040	15133	93		
										1SH42531	10529	10623	94		
										1SH42532	14031	14088	57		
										1SH42533	46171	46463	292		
										1SH42534	4982	4999	17		
										1SH42967	23589	23840	251		
										1SH43385	10521	10580	59		
										1SH44164	4541	4587	46		
										1SH44165	1442	1459	17		
										1SH44688	18195	18205	10		
										1SH44906	14934	15080	146		
										1SH45329	4430	4435	5		
										1SH47657	2325	2449	124		
										1SH48455	6713	6801	88		
										1SH50313	6707	6786	79		
										1SH50314	7068	7139	71		
										1SH50315	6509	6583	74		
										1SH50316	2712	2735	23		
										1SH50650	6140	6145	5		
										1SH50651	5155	5275	120		
										1SH50652	4007	4187	180		
										1SH50653	5259	5299	40		
										1SH51022	5799	5895	96		
										1SH51023	6899	6959	60		
										1SH51024	5393	5478	85		
										1SH51025	4629	4699	70		
										1SH51026	5531	5611	80		

Sl. No.	Name of Division	Name of PSS	Voltage Level	Name of Outgoing 11 kV Feeder	Distribution Transformer Capacity in KVA/ 11 kV Bulk Consumer	Distribution Transformer Location Code/ Bulk Consumer Location	A	B	C=B-A		D	E	F=E-D	G=C-∑F	
							Initial Meter Reading at LT side of DTR (LU)	Final Meter Reading at LT side of DTR (LU)	Energy Consumption at destination end during interval in LU	Consumer ID No./ Meter No.	Initial Meter Reading at Consumer side (U)	Final Meter Reading at Consumer side (U)	Energy Consumption at destination end during interval in Unit	LT Line Loss in LU	% of LT Loss w.r.t Input Energy
										1SH51027	5622	5709	87		
										1SH51028	8537	8637	100		
										1SH51141	6595	6716	121		
										1SH53996	730	744	14		
										1SH53997	9823	9996	173		
										1SH53998	6361	6528	167		
										1SH5449	5284	5327	43		
										1SH55343	3294	3452	158		
										1SH55344	1510	1543	33		
										1SH55802	1856	1930	74		
										1SH57382	1359	1458	99		
										1SH6340	7841	7861	20		
										1SH7122	7119	7367	248		
										1SH8073	1270	1374	104		
										1SH8183	16527	16674	147		
										1SH8219	225	229	4		
										1SP5307	32095	32360	265		
										1SP5410	58834	58933	99		
										AP565	28403	28509	106		
										IS35510	13941	14309	368		
										MS1SH51801	7186	7331	145		
										MS1SH51802	12629	12752	123		
										MS1SH51803	12021	12411	390		
										MS1SH51804	11771	11947	176		
										MS1SH51805	3884	3993	109		
										MS1SH51936	4448	4488	40		
										MS1SH51937	6253	6275	22		
										SP3773	890	943	53		
Sub-Total (3)									**0.350**				**32561**	**0.024**	
4	JAYANAGAR	P.B. Nagar	66/11 KV	11 KV F -12 Feeder	990	TC-60/REACH FERTILTY CLINIC TC/990	24.570	25.488	0.919	1S13567	1645	1957	312	0.082	8.963
										1S13568	2241	2901	660		
										1S13577	13044	14136	1092		
										1S13578	12244	12403	159		
										1S13579	577	1693	1116		
										1S13582	2230	2413	183		
										1S20435	15428	15656	228		
										1S20436	911	1986	1075		
										1S20437	2414	2627	213		
										1S26578	2756	2908	152		
										1S26579	3573	3777	204		

Sl. No.	Name of Division	Name of PSS	Voltage Level	Name of Outgoing 11 kV Feeder	Distribution Transformer Capacity in KVA/ 11 kV Bulk Consumer	Distribution Transformer Location Code/ Bulk Consumer Location	A	B	C=B-A		D	E	F=E-D	G=C-∑F	
							Initial Meter Reading at LT side of DTR (LU)	Final Meter Reading at LT side of DTR (LU)	Energy Consumption at destination end during interval in LU	Consumer ID No./ Meter No.	Initial Meter Reading at Consumer side (U)	Final Meter Reading at Consumer side (U)	Energy Consumption at destination end during interval in Unit	LT Line Loss in LU	% of LT Loss w.r.t Input Energy
										1S28038	3206	4402	1196		
										1S33524	3812	5305	1493		
										1S39208	687	1948	1261		
										1S40156	127	1158	1031		
										1S40910	2931	4986	2055		
										1S45558	23322	24331	1009		
										1S45784	57	765	708		
										1S50564	9702	10981	1279		
										1S50595	21870	23052	1182		
										1S56684	579	1583	1004		
										1S576	12174	13226	1052		
										1S60397	3818	3968	150		
										1SH1291	3356	3620	264		
										1SH13230	1631	6634	5003		
										1SH1336	5866	6133	267		
										1SH1351	2636	2850	214		
										1SH14445	3951	4235	284		
										1SH14609	5074	6502	1428		
										1SH15911	4165	4483	318		
										1SH15946	9481	9795	314		
										1SH15947	30597	31711	1114		
										1SH16181	21822	21983	161		
										1SH1620	6882	6982	100		
										1SH1625	4914	5278	364		
										1SH17014	4085	4391	306		
										1SH17179	6339	6544	205		
										1SH17749	21690	22692	1002		
										1SH17873	35149	35320	171		
										1SH18021	1054	1175	121		
										1SH18023	8626	8808	182		
										1SH18024	27718	27986	268		
										1SH18644	2329	2476	147		
										1SH18730	2231	2512	281		
										1SH18776	5749	6171	422		
										1SH19648	1964	2166	202		
										1SH1974	6767	7323	556		
										1SH19838	1086	1245	159		
										1SH20312	24635	26763	2128		
										1SH20977	9970	10258	288		
										1SH21214	2131	2260	129		
										1SH21215	4714	5804	1090		

Sl. No.	Name of Division	Name of PSS	Voltage Level	Name of Outgoing 11 kV Feeder	Distribution Transformer Capacity in KVA/ 11 kV Bulk Consumer	Distribution Transformer Location Code/ Bulk Consumer Location	A	B	C=B-A		D	E	F=E-D	G=C-∑F	
							Initial Meter Reading at LT side of DTR (LU)	Final Meter Reading at LT side of DTR (LU)	Energy Consumption at destination end during interval in LU	Consumer ID No./ Meter No.	Initial Meter Reading at Consumer side (U)	Final Meter Reading at Consumer side (U)	Energy Consumption at destination end during interval in Unit	LT Line Loss in LU	% of LT Loss w.r.t Input Energy
										1SH21413	4011	6826	2815		
										1SH21414	62669	62934	265		
										1SH21959	3600	4001	401		
										1SH21997	2428	2710	282		
										1SH2264	29512	29844	332		
										1SH23377	2065	2166	101		
										1SH23378	446	808	362		
										1SH2351	18691	18843	152		
										1SH24484	34938	35072	134		
										1SH24721	55	258	203		
										1SH25104	20085	20474	389		
										1SH25105	165	188	23		
										1SH25410	4231	4322	91		
										1SH25934	59	159	100		
										1SH25935	1189	1236	47		
										1SH26591	2306	2372	66		
										1SH26672	30879	30985	106		
										1SH27167	5751	6125	374		
										1SH2738	1228	1377	149		
										1SH27581	9841	9978	137		
										1SH27582	1931	2114	183		
										1SH28139	695	716	21		
										1SH28140	351	472	121		
										1SH28409	452	505	53		
										1SH28451	7038	7149	111		
										1SH28575	3983	4146	163		
										1SH29018	27200	27463	263		
										1SH29182	26457	26820	363		
										1SH29183	616	1197	581		
										1SH29216	4120	4341	221		
										1SH29401	18438	19003	565		
										1SH29652	8135	8303	168		
										1SH30049	2257	2281	24		
										1SH30115	27220	27495	275		
										1SH30116	900	1008	108		
										1SH31551	2986	3270	284		
										1SH31680	2217	2400	183		
										1SH31736	2537	2704	167		
										1SH32413	43625	44006	381		
										1SH36401	116	347	231		
										1SH36402	3594	3835	241		

Sl. No.	Name of Division	Name of PSS	Voltage Level	Name of Outgoing 11 kV Feeder	Distribution Transformer Capacity in KVA/ 11 kV Bulk Consumer	Distribution Transformer Location Code/ Bulk Consumer Location	A	B	C=B-A		D	E	F=E-D	G=C-∑F	
							Initial Meter Reading at LT side of DTR (LU)	Final Meter Reading at LT side of DTR (LU)	Energy Consumption at destination end during interval in LU	Consumer ID No./ Meter No.	Initial Meter Reading at Consumer side (U)	Final Meter Reading at Consumer side (U)	Energy Consumption at destination end during interval in Unit	LT Line Loss in LU	% of LT Loss w.r.t Input Energy
										1SH36845	155	365	210		
										1SH36894	38198	38325	127		
										1SH36895	641	740	99		
										1SH37090	4425	4566	141		
										1SH37091	6352	6644	292		
										1SH37544	4029	4193	164		
										1SH37964	1265	1764	499		
										1SH38129	20350	20540	190		
										1SH38174	20855	20985	130		
										1SH38175	20847	20985	138		
										1SH38377	55944	56361	417		
										1SH38378	6137	6394	257		
										1SH38532	21651	21715	64		
										1SH38649	5863	6478	615		
										1SH39059	7328	7379	51		
										1SH39060	5545	5895	350		
										1SH39061	1107	1258	151		
										1SH39083	7753	8547	794		
										1SH39536	22766	22967	201		
										1SH39562	391	410	19		
										1SH39573	10924	11277	353		
										1SH39578	15469	15578	109		
										1SH39741	53731	53919	188		
										1SH39742	4498	4543	45		
										1SH39832	32169	32744	575		
										1SH39833	12966	13021	55		
										1SH40112	49774	50130	356		
										1SH40113	9306	9573	267		
										1SH40114	24116	24773	657		
										1SH40339	14435	15709	1274		
										1SH40364	21934	22632	698		
										1SH40365	72200	72355	155		
										1SH40646	9	110	101		
										1SH4092	22803	22984	181		
										1SH4097	1045	1147	102		
										1SH4098	47200	47553	353		
										1SH41185	2087	2275	188		
										1SH41868	31833	32097	264		
										1SH43180	5950	5995	45		
										1SH43610	63893	64446	553		
										1SH44042A	34501	34975	474		

Sl. No.	Name of Division	Name of PSS	Voltage Level	Name of Outgoing 11 kV Feeder	Distribution Transformer Capacity in KVA/ 11 kV Bulk Consumer	Distribution Transformer Location Code/ Bulk Consumer Location	A	B	C=B-A		D	E	F=E-D	G=C-∑F	
							Initial Meter Reading at LT side of DTR (LU)	Final Meter Reading at LT side of DTR (LU)	Energy Consumption at destination end during interval in LU	Consumer ID No./ Meter No.	Initial Meter Reading at Consumer side (U)	Final Meter Reading at Consumer side (U)	Energy Consumption at destination end during interval in Unit	LT Line Loss in LU	% of LT Loss w.r.t Input Energy
										1SH44231	39992	40213	221		
										1SH44672	2422	2444	22		
										1SH44673	11750	11820	70		
										1SH44689	10896	10990	94		
										1SH44748	12142	12377	235		
										1SH45686	12529	12653	124		
										1SH45693	27741	28124	383		
										1SH45709	17295	17525	230		
										1SH45710	11068	11177	109		
										1SH45711	16246	16371	125		
										1SH45712	13627	13692	65		
										1SH45713	2838	2900	62		
										1SH45714	6259	6322	63		
										1SH4599	1812	1971	159		
										1SH46717	13164	13318	154		
										1SH46718	16594	16813	219		
										1SH46719	1461	1475	14		
										1SH46741	21196	21720	524		
										1SH47002	23473	23695	222		
										1SH47253	35361	35946	585		
										1SH47254	11003	11085	82		
										1SH47255	13940	14075	135		
										1SH47256	2974	3004	30		
										1SH48483	32595	32913	318		
										1SH48484	23740	23969	229		
										1SH48485	1249	1759	510		
										1SH4876	2460	2674	214		
										1SH4941	1516	1800	284		
										1SH5049	2541	2716	175		
										1SH50906	29631	29676	45		
										1SH50907	2259	2281	22		
										1SH50946	1753	1797	44		
										1SH51879	10691	10905	214		
										1SH51893	20222	20472	250		
										1SH5206	7377	7692	315		
										1SH52443	13059	13243	184		
										1SH52697	33438	33962	524		
										1SH5647	5199	5228	29		
										1SH5857	2147	2258	111		
										1SH6898	6130	6353	223		
										1SH8720	30393	30822	429		

Sl. No.	Name of Division	Name of PSS	Voltage Level	Name of Outgoing 11 kV Feeder	Distribution Transformer Capacity in KVA/ 11 kV Bulk Consumer	Distribution Transformer Location Code/ Bulk Consumer Location	A	B	C=B-A		D	E	F=E-D	G=C-∑F	
							Initial Meter Reading at LT side of DTR (LU)	Final Meter Reading at LT side of DTR (LU)	Energy Consumption at destination end during interval in LU	Consumer ID No./ Meter No.	Initial Meter Reading at Consumer side (U)	Final Meter Reading at Consumer side (U)	Energy Consumption at destination end during interval in Unit	LT Line Loss in LU	% of LT Loss w.r.t Input Energy
										1SH953	6971	7144	173		
										1SH9893	-125	89	214		
										1SH9917	4272	4641	369		
										1SP3148	1137	1258	121		
										1SP4183	651	697	46		
										1SP4423	400	425	25		
										1SP4468	1862	2184	322		
										1SP4670	2736	2776	40		
										1SP4713	21787	21867	80		
										1SP4888	8272	8320	48		
										1SP4939	1876	1995	119		
										1SP5123	54727	55218	491		
										1SP5131	768	808	40		
										1SP5204	485	531	46		
										MS1S59489	3805	3901	96		
										MS1S59490	46569	48770	2201		
										MS1S59904	16975	17292	317		
										MS1SH52597	10280	10296	16		
										MS1SH52598	7580	7675	95		
										MS1SH53414	1173	1220	47		
										MS1SH53415	10604	10874	270		
										MS1SH53416	13958	14191	233		
										MS1SH53529	15024	15267	243		
										MS1SH53637	18977	19347	370		
										MS1SH53638	6773	7010	237		
										MS1SH53639	13960	14196	236		
										MS1SH53640	5867	6184	317		
										MS1SH53641	4841	5003	162		
										MS1SH53642	9374	9524	150		
										MS1SH53643	10487	10769	282		
										MS1SH53644	7620	7791	171		
										MS1SH53645	11361	11644	283		
										MS1SH53715	9962	10180	218		
										MS1SH53716	8660	9093	433		
										MS1SH53717	11994	12276	282		
										MS1SH53718	9833	10110	277		
										MS1SH53719	12043	12283	240		
										MS1SH55840	11447	11754	307		
										MS1SH55841	2866	3070	204		
										MS1SH55842	6949	7025	76		
										MS1SH55843	5229	5404	175		

Sl. No.	Name of Division	Name of PSS	Voltage Level	Name of Outgoing 11 kV Feeder	Distribution Transformer Capacity in KVA/ 11 kV Bulk Consumer	Distribution Transformer Location Code/ Bulk Consumer Location	A	B	C=B-A	Consumer ID No./ Meter No.	D	E	F=E-D	G=C-∑F	% of LT Loss w.r.t Input Energy
							Initial Meter Reading at LT side of DTR (LU)	Final Meter Reading at LT side of DTR (LU)	Energy Consumption at destination end during interval in LU		Initial Meter Reading at Consumer side (U)	Final Meter Reading at Consumer side (U)	Energy Consumption at destination end during interval in Unit	LT Line Loss in LU	
										MS1SH55844	3030	3355	325		
										MS1SH56532	2810	2929	119		
										MS1SH56533	1912	2009	97		
										MS1SH56534	1225	1376	151		
										MS1SH56535	4494	4710	216		
										MS1SH56536	3411	3586	175		
										MS1SH56537	3081	3233	152		
										MS1SH56538	3280	3438	158		
										MS1SH56539	3695	4042	347		
										MS1SH56540	2917	3057	140		
										MS1SH56541	3213	3414	201		
										MS1SH56542	3097	3222	125		
										MS1SH56543	5109	5566	457		
										MS1SH56545	3331	3460	129		
										MS1SH56546	3499	3787	288		
										MS1SH56547	3091	3288	197		
										MS1SH56548	12996	13450	454		
										SH43354	1898	2908	1010		
										SH43355	20787	20911	124		
										SH43356	26815	26978	163		
										SP2496	18744	19780	1036		
Sub-Total (4)									**0.919**				**83623**	**0.082**	
5	Jayanagar	NIMHANS	66/11KV	11 KV F4 H.Thappa RMU	100	TC_80/GULBARGA COLONY /100	9.344	9.428	0.084	1S24870	37379	37395	16	0.006	7.212
										1S24871	1129	1761	632		
										1S24872	443	491	48		
										1S25129	9221	9358	137		
										1S26239	3049	3562	513		
										1S26240	3108	3135	27		
										1S26552	3052	3326	274		
										1S28169	18225	18293	68		
										1S29666	4252	4369	117		
										1S30028	1910	1963	53		
										1S31296	7502	7564	62		
										1S31297	4187	4187	0		
										1S32430	9340	9481	141		
										1S32893	3948	4028	80		
										1S33593	5504	5506	2		
										1S34464	11100	11184	84		
										1S35269	786	896	110		
										1S35270	2796	2887	91		

Sl. No.	Name of Division	Name of PSS	Voltage Level	Name of Outgoing 11 kV Feeder	Distribution Transformer Capacity in KVA/ 11 kV Bulk Consumer	Distribution Transformer Location Code/ Bulk Consumer Location	A	B	C=B-A		D	E	F=E-D	G=C-∑F	
							Initial Meter Reading at LT side of DTR (LU)	Final Meter Reading at LT side of DTR (LU)	Energy Consumption at destination end during interval in LU	Consumer ID No./ Meter No.	Initial Meter Reading at Consumer side (U)	Final Meter Reading at Consumer side (U)	Energy Consumption at destination end during interval in Unit	LT Line Loss in LU	% of LT Loss w.r.t Input Energy
										1S35525	1175	1275	100		
										1S36111	484	489	5		
										1S36112	5454	5518	64		
										1S36113	6594	6675	81		
										1S37051	7822	7870	48		
										1S39964	7359	7416	57		
										1S41118	1300	1314	14		
										1S41119	10139	10300	161		
										1S41529	4982	5061	79		
										1S43699	7910	7978	68		
										1S43752	15498	15754	256		
										1S45753	2245	2312	67		
										1S45754	7260	7300	40		
										1S45755	6760	6796	36		
										1S46723	6335	6420	85		
										1S47212	4085	4101	16		
										1S47215	2865	3099	234		
										1S47216	4732	4838	106		
										1S47340	480	528	48		
										1S47671	13991	14099	108		
										1S48490	12400	12509	109		
										1S50490	0	0	0		
										1S50784	8565	8681	116		
										1S50785	15455	15558	103		
										1S54078	8560	8601	41		
										1S54137	12971	13087	116		
										1S54144	17505	17651	146		
										1S54496	7228	7317	89		
										1S55241	2430	2461	31		
										1S55245	4181	4268	87		
										1S55247	4112	4157	45		
										1S55255	4480	4580	100		
										1S55287	384	402	18		
										1S55288	4031	4074	43		
										1S55298	8927	9041	114		
										1S55327	5001	5071	70		
										1S55328	3377	3431	54		
										1S55459	3117	3117	0		
										1S55474	4723	4757	34		
										1S55756	10100	10238	138		
										1S55757	10370	10469	99		

Sl. No.	Name of Division	Name of PSS	Voltage Level	Name of Outgoing 11 kV Feeder	Distribution Transformer Capacity in KVA/ 11 kV Bulk Consumer	Distribution Transformer Location Code/ Bulk Consumer Location	A	B	C=B-A		D	E	F=E-D	G=C-∑F	
							Initial Meter Reading at LT side of DTR (LU)	Final Meter Reading at LT side of DTR (LU)	Energy Consumption at destination end during interval in LU	Consumer ID No./ Meter No.	Initial Meter Reading at Consumer side (U)	Final Meter Reading at Consumer side (U)	Energy Consumption at destination end during interval in Unit	LT Line Loss in LU	% of LT Loss w.r.t Input Energy
										1S56561	2560	2604	44		
										1S56562	14000	14162	162		
										1S61611	1356	1387	31		
										1S62902	76	79	3		
										1SH26246	13908	14019	111		
										1SH33956	14021	14192	171		
										1SH33957	3688	4077	389		
										1SH49557	10820	10946	126		
										1SH52923	339	342	3		
										1SH54935	968	988	20		
										1SH55606	2312	2392	80		
										1SH55607	6084	6273	189		
										1SH55608	5542	5725	183		
										1SH55609	363	363	0		
										1SH55610	2892	2962	70		
										IS47341	9053	9122	69		
										ISH48061	4800	4897	97		
										MS1S54972	9587	9723	136		
										MS1S59537	6315	6488	173		
										MS1S59538	1565	1624	59		
Sub-Total (5)									**0.084**				**7797**	**0.006**	
6	Jayanagar	NIMHANS	66/11KV	11 KV F4 H.Thappa RMU	250	TC_86/RBI COLONY /250	4.349	4.733	0.384	1S11651	71979	72120	141	0.028	7.168
										1S13625	24507	24724	217		
										1S14084	4928	4979	51		
										1S21946	675	785	110		
										1S21947	1934	1951	17		
										1S21948	7646	7666	20		
										1S21949	4535	4620	85		
										1S24079	1014	1065	51		
										1S25683	1884	1925	41		
										1S25785	1524	1651	127		
										1S27526	8942	8979	37		
										1S27527	5687	5697	10		
										1S27528	95	99	4		
										1S29211	4076	4262	186		
										1S30879	7770	7816	46		
										1S30880	4776	4866	90		
										1S33628	11634	11647	13		
										1S33630	2490	2515	25		
										1S37109	1819	1822	3		

Sl. No.	Name of Division	Name of PSS	Voltage Level	Name of Outgoing 11 kV Feeder	Distribution Transformer Capacity in KVA/ 11 kV Bulk Consumer	Distribution Transformer Location Code/ Bulk Consumer Location	A	B	C=B-A		D	E	F=E-D	G=C-∑F	
							Initial Meter Reading at LT side of DTR (LU)	Final Meter Reading at LT side of DTR (LU)	Energy Consumption at destination end during interval in LU	Consumer ID No./ Meter No.	Initial Meter Reading at Consumer side (U)	Final Meter Reading at Consumer side (U)	Energy Consumption at destination end during interval in Unit	LT Line Loss in LU	% of LT Loss w.r.t Input Energy
										1S42103	15851	16208	357		
										1S43375	4546	4638	92		
										1S43376	1791	1810	19		
										1S43377	1737	1747	10		
										1S43378	9612	9652	40		
										1S43379	8145	8265	120		
										1S44221	10691	10820	129		
										1S46789	1411	1419	8		
										1S46790	3056	3255	199		
										1S46791	2033	2065	32		
										1S47233	2508	2565	57		
										1S47979	7344	7534	190		
										1S48548	6722	6781	59		
										1S48757	4593	4650	57		
										1S50733	7536	7592	56		
										1S54664	12261	12503	242		
										1S54665	1542	1602	60		
										1S55013	3751	3794	43		
										1S55211	2119	2124	5		
										1S55818	9067	9208	141		
										1S55954	15245	15389	144		
										1S56601	5921	6018	97		
										1S56607	581	585	4		
										1S59402	6684	6788	104		
										1SH12219	27681	28205	524		
										1SH12371	3667	3882	215		
										1SH12373	76315	76460	145		
										1SH12627	19882	20190	308		
										1SH12628	34938	35097	159		
										1SH12654	6335	6536	201		
										1SH13387	4965	5162	197		
										1SH13884	1793	2054	261		
										1SH13960	52465	52956	491		
										1SH14741	9820	9926	106		
										1SH15197	5611	5856	245		
										1SH15648	28378	28757	379		
										1SH15774	21825	21888	63		
										1SH16194	20198	20250	52		
										1SH16292	2187	2543	356		
										1SH16366	4926	5090	164		
										1SH17194	5521	5551	30		

Sl. No.	Name of Division	Name of PSS	Voltage Level	Name of Outgoing 11 kV Feeder	Distribution Transformer Capacity in KVA/ 11 kV Bulk Consumer	Distribution Transformer Location Code/ Bulk Consumer Location	A	B	C=B-A		D	E	F=E-D	G=C-∑F	
							Initial Meter Reading at LT side of DTR (LU)	Final Meter Reading at LT side of DTR (LU)	Energy Consumption at destination end during interval in LU	Consumer ID No./ Meter No.	Initial Meter Reading at Consumer side (U)	Final Meter Reading at Consumer side (U)	Energy Consumption at destination end during interval in Unit	LT Line Loss in LU	% of LT Loss w.r.t Input Energy
										1SH17995	36525	36860	335		
										1SH18615	7504	7777	273		
										1SH19471	15989	16311	322		
										1SH19608	24443	24717	274		
										1SH21279	1386	1636	250		
										1SH21637	23610	23850	240		
										1SH21978	45038	45449	411		
										1SH22168	47887	48328	441		
										1SH22450	31778	32141	363		
										1SH23583	7253	7400	147		
										1SH23805	47157	47332	175		
										1SH24216	21108	21296	188		
										1SH24217	18164	18520	356		
										1SH24218	12035	12146	111		
										1SH24219	14663	14887	224		
										1SH24923	37865	38023	158		
										1SH25227	2618	2871	253		
										1SH25533	7713	7717	4		
										1SH25928	2842	3111	269		
										1SH25929	54520	54885	365		
										1SH28674	6913	7244	331		
										1SH28872	7925	7963	38		
										1SH29135	2030	2146	116		
										1SH29615	22825	22866	41		
										1SH29619	11986	12257	271		
										1SH30948	5180	5388	208		
										1SH30949	1017	1211	194		
										1SH31152	68872	69039	167		
										1SH32050	9467	9605	138		
										1SH32504	3079	3152	73		
										1SH32561	4794	4986	192		
										1SH33214	7945	8045	100		
										1SH3373	5989	6023	34		
										1SH35096	275	635	360		
										1SH35097	12100	12103	3		
										1SH35569	6360	6446	86		
										1SH35887	54921	55274	353		
										1SH36017	11829	11958	129		
										1SH36855	6487	6659	172		
										1SH38810	51400	51776	376		
										1SH38849	980	1035	55		

Sl. No.	Name of Division	Name of PSS	Voltage Level	Name of Outgoing 11 kV Feeder	Distribution Transformer Capacity in KVA/ 11 kV Bulk Consumer	Distribution Transformer Location Code/ Bulk Consumer Location	A	B	C=B-A		D	E	F=E-D	G=C-∑F	
							Initial Meter Reading at LT side of DTR (LU)	Final Meter Reading at LT side of DTR (LU)	Energy Consumption at destination end during interval in LU	Consumer ID No./ Meter No.	Initial Meter Reading at Consumer side (U)	Final Meter Reading at Consumer side (U)	Energy Consumption at destination end during interval in Unit	LT Line Loss in LU	% of LT Loss w.r.t Input Energy
										1SH39056	31127	31347	220		
										1SH39174	28786	29053	267		
										1SH39175	3342	3541	199		
										1SH40187	61180	61555	375		
										1SH40188	949	1202	253		
										1SH40978	11658	11698	40		
										1SH40997	20799	21026	227		
										1SH41305	5533	5792	259		
										1SH41831	8238	8358	120		
										1SH41832	3802	4059	257		
										1SH41833	2768	3059	291		
										1SH41945	12732	12933	201		
										1SH41946	10456	10517	61		
										1SH41947	2642	2649	7		
										1SH42370	28605	28937	332		
										1SH42371	27298	27987	689		
										1SH42372	15947	16008	61		
										1SH42456	32455	33497	1042		
										1SH43924	33819	34320	501		
										1SH44178	12010	12208	198		
										1SH44934	18946	19073	127		
										1SH4528	1856	1916	60		
										1SH45326	21083	21221	138		
										1SH45327	9252	9386	134		
										1SH46393	22992	23408	416		
										1SH46411	8656	8854	198		
										1SH46574	15728	15998	270		
										1SH46575	4908	4967	59		
										1SH47014	17606	17711	105		
										1SH47167	14912	15116	204		
										1SH47457	4690	4757	67		
										1SH47856	11971	12143	172		
										1SH47857	14683	14696	13		
										1SH47858	5958	5993	35		
										1SH47919	52171	52587	416		
										1SH47920	8315	8427	112		
										1SH47921	33485	33897	412		
										1SH47922	22098	22403	305		
										1SH4824	4647	4668	21		
										1SH48810	20067	20243	176		
										1SH49494	14923	15282	359		

Sl. No.	Name of Division	Name of PSS	Voltage Level	Name of Outgoing 11 kV Feeder	Distribution Transformer Capacity in KVA/ 11 kV Bulk Consumer	Distribution Transformer Location Code/ Bulk Consumer Location	A	B	C=B-A		D	E	F=E-D	G=C-∑F	
							Initial Meter Reading at LT side of DTR (LU)	Final Meter Reading at LT side of DTR (LU)	Energy Consumption at destination end during interval in LU	Consumer ID No./ Meter No.	Initial Meter Reading at Consumer side (U)	Final Meter Reading at Consumer side (U)	Energy Consumption at destination end during interval in Unit	LT Line Loss in LU	% of LT Loss w.r.t Input Energy
										1SH49495	14276	14630	354		
										1SH49618	4313	4397	84		
										1SH49620	6667	6802	135		
										1SH49621	1677	1682	5		
										1SH50974	9275	9693	418		
										1SH50975	978	987	9		
										1SH51362	23791	24158	367		
										1SH51363	24344	24799	455		
										1SH51364	21337	21558	221		
										1SH51365	1521	1549	28		
										1SH51653	6834	6968	134		
										1SH51654	12661	12721	60		
										1SH53332	8279	8406	127		
										1SH53438	11086	11246	160		
										1SH53439	13689	14078	389		
										1SH53440	2390	2548	158		
										1SH53441	2677	2703	26		
										1SH54400	11739	12212	473		
										1SH57360	1511	1609	98		
										1SH57361	2663	2858	195		
										1SH7762	49340	49961	621		
										1SP5368	5417	5451	34		
										1SP5399	66666	67307	641		
										IS42104	2748	2799	51		
										MS1SH51558	6022	6132	110		
										MS1SH51560	13467	13640	173		
										MS1SH51561	2106	2136	30		
										MS1SH56134	5414	5683	269		
										MS1SH56135	5264	5798	534		
										MS1SH56136	6163	6395	232		
										MS1SH56138	10123	10343	220		
										SH14083	6547	6579	32		
										SH20131	75516	76858	1342		
										SH22986	276	688	412		
										SH44699	12942	13159	217		
										SH45539	76500	77896	1396		
Sub-Total (6)									**0.384**				**35640**	**0.028**	

Sl. No.	Name of Division	Name of PSS	Voltage Level	Name of Outgoing 11 kV Feeder	Distribution Transformer Capacity in KVA/ 11 kV Bulk Consumer	Distribution Transformer Location Code/ Bulk Consumer Location	A	B	C=B-A		D	E	F=E-D	G=C-∑F	
							Initial Meter Reading at LT side of DTR (LU)	Final Meter Reading at LT side of DTR (LU)	Energy Consumption at destination end during interval in LU	Consumer ID No./ Meter No.	Initial Meter Reading at Consumer side (U)	Final Meter Reading at Consumer side (U)	Energy Consumption at destination end during interval in Unit	LT Line Loss in LU	% of LT Loss w.r.t Input Energy
7	Jayanagar	NIMHANS	66/11KV	11 KV F4 H.Thappa RMU	500	TC_82/NIMHASS QTRS TC 01/500	12.802	13.206	0.404	1S22865	26286	27102	816	0.033	8.187
										1S23922	3254	3427	173		
										1S39736	6500	6519	19		
										1S39737	3655	3680	25		
										1S39738	725	728	3		
										1S39739	7995	8093	98		
										1S47240	2375	2390	15		
										1S51583	2216	2716	500		
										1S54272	7894	8006	112		
										1S54403	5917	5966	49		
										1S61543	150583	156130	5547		
										1S63228	2097	2564	467		
										1SGL27821	74120	75362	1242		
										1SH18435	304	485	181		
										1SH25376	8553	8685	132		
										1SH25377	6519	6713	194		
										1SH25378	11931	11963	32		
										1SH25379	8471	8991	520		
										1SH25380	3692	3762	70		
										1SH25381	9456	9578	122		
										1SH25382	4944	5058	114		
										1SH25383	2752	2852	100		
										1SH25384	7809	7959	150		
										1SH25387	1742	1871	129		
										1SH28245	18167	18479	312		
										1SH28580	20992	21150	158		
										1SH28581	2469	2657	188		
										1SH28582	2246	2480	234		
										1SH28583	28692	28803	111		
										1SH28584	10368	10748	380		
										1SH28585	3823	4083	260		
										1SH28586	5332	5692	360		
										1SH28588	3724	3985	261		
										1SH28589	2972	3182	210		
										1SH28590	3502	3733	231		
										1SH28591	2385	2508	123		
										1SH28592	1591	1736	145		
										1SH28594	2441	2601	160		
										1SH28595	15978	16127	149		
										1SH28597	9998	10143	145		
										1SH28598	2404	2504	100		

Sl. No.	Name of Division	Name of PSS	Voltage Level	Name of Outgoing 11 kV Feeder	Distribution Transformer Capacity in KVA/ 11 kV Bulk Consumer	Distribution Transformer Location Code/ Bulk Consumer Location	A	B	C=B-A		D	E	F=E-D	G=C-∑F	
							Initial Meter Reading at LT side of DTR (LU)	Final Meter Reading at LT side of DTR (LU)	Energy Consumption at destination end during interval in LU	Consumer ID No./ Meter No.	Initial Meter Reading at Consumer side (U)	Final Meter Reading at Consumer side (U)	Energy Consumption at destination end during interval in Unit	LT Line Loss in LU	% of LT Loss w.r.t Input Energy
										1SH28599	1585	1682	97		
										1SH28600	2856	3036	180		
										1SH28601	1577	1682	105		
										1SH28602	3104	3312	208		
										1SH28603	2237	2515	278		
										1SH29107	787	824	37		
										1SH29108	13952	14022	70		
										1SH29109	654	704	50		
										1SH29111	13471	13698	227		
										1SH29112	2391	2551	160		
										1SH29113	1476	1611	135		
										1SH29114	2021	2293	272		
										1SH29115	1709	1821	112		
										1SH29116	1331	1402	71		
										1SH29117	8255	8435	180		
										1SH29118	6765	6845	80		
										1SH29143	5683	5893	210		
										1SH29687	17925	18129	204		
										1SH29688	21118	21386	268		
										1SH29689	8473	8663	190		
										1SH29690	4290	4560	270		
										1SH29691	3675	3861	186		
										1SH29692	38555	38962	407		
										1SH29693	3985	4217	232		
										1SH29694	4047	4278	231		
										1SH30430	3003	3203	200		
										1SH30431	7124	7514	390		
										1SH30432	32827	33037	210		
										1SH30433	3128	3328	200		
										1SH30434	3259	3463	204		
										1SH30435	1701	1796	95		
										1SH30436	1995	2123	128		
										1SH30437	2345	2480	135		
										1SH30438	3266	3485	219		
										1SH30440	2192	2315	123		
										1SH34663	2473	2523	50		
										1SH34664	1882	1972	90		
										1SH34665	2016	2084	68		
										1SH34666	27013	27265	252		
										1SH34667	3474	3704	230		
										1SH34668	3571	3817	246		

Sl. No.	Name of Division	Name of PSS	Voltage Level	Name of Outgoing 11 kV Feeder	Distribution Transformer Capacity in KVA/ 11 kV Bulk Consumer	Distribution Transformer Location Code/ Bulk Consumer Location	A	B	C=B-A		D	E	F=E-D	G=C-∑F	
							Initial Meter Reading at LT side of DTR (LU)	Final Meter Reading at LT side of DTR (LU)	Energy Consumption at destination end during interval in LU	Consumer ID No./ Meter No.	Initial Meter Reading at Consumer side (U)	Final Meter Reading at Consumer side (U)	Energy Consumption at destination end during interval in Unit	LT Line Loss in LU	% of LT Loss w.r.t Input Energy
										1SH34669	10413	10477	64		
										1SH34670	13462	13474	12		
										1SH34671	16890	17029	139		
										1SH34672	373	403	30		
										1SH34673	3085	3290	205		
										1SH34674	433	460	27		
										1SH34675	1775	1969	194		
										1SH34676	3594	3823	229		
										1SH34677	4149	4392	243		
										1SH34678	14349	14548	199		
										1SH34679	745	812	67		
										1SH34680	2398	2510	112		
										1SH34681	3104	3255	151		
										1SH34682	2174	2349	175		
										1SH34683	40338	40564	226		
										1SH34684	1744	1839	95		
										1SH34685	2642	2814	172		
										1SH34686	2281	2445	164		
										1SH34687	31548	31802	254		
										1SH34688	2884	3085	201		
										1SH34689	3641	3912	271		
										1SH34690	1254	1393	139		
										1SH34691	29163	29219	56		
										1SH34692	1961	2142	181		
										1SH34693	2391	2555	164		
										1SH34694	2242	2334	92		
										1SH34695	1890	1984	94		
										1SH34696	2799	2956	157		
										1SH34697	1273	1291	18		
										1SH34698	1632	1768	136		
										1SH36452	1732	1827	95		
										1SH36453	21217	21481	264		
										1SH36454	5905	6086	181		
										1SH36455	1725	1892	167		
										1SH36456	13230	13371	141		
										1SH36457	16224	16226	2		
										1SH36458	1939	2085	146		
										1SH36459	1468	1567	99		
										1SH36460	4182	4572	390		
										1SH36461	3356	3484	128		
										1SH36462	853	853	0		

Sl. No.	Name of Division	Name of PSS	Voltage Level	Name of Outgoing 11 kV Feeder	Distribution Transformer Capacity in KVA/ 11 kV Bulk Consumer	Distribution Transformer Location Code/ Bulk Consumer Location	A	B	C=B-A		D	E	F=E-D	G=C-∑F	
							Initial Meter Reading at LT side of DTR (LU)	Final Meter Reading at LT side of DTR (LU)	Energy Consumption at destination end during interval in LU	Consumer ID No./ Meter No.	Initial Meter Reading at Consumer side (U)	Final Meter Reading at Consumer side (U)	Energy Consumption at destination end during interval in Unit	LT Line Loss in LU	% of LT Loss w.r.t Input Energy
										1SH36463	2470	2629	159		
										1SH36464	2424	2593	169		
										1SH36465	2659	2822	163		
										1SH36466	8982	9057	75		
										1SH36467	27511	27576	65		
										1SH36468	2880	2950	70		
										1SH36469	2863	3090	227		
										1SH36470	3197	3399	202		
										1SH36471	4466	4797	331		
										1SH36472	1174	1286	112		
										1SH36473	1786	1929	143		
										1SH36474	10484	10572	88		
										1SH36475	2619	2805	186		
										1SH38139	6335	6435	100		
										1SH38140	3844	3880	36		
										1SH38141	5683	5716	33		
										1SH38142	4025	4100	75		
										1SH39381	1761	1766	5		
										1SH39987	33976	34161	185		
										1SH44273	42590	42830	240		
										1SH44275	31229	31460	231		
										1SH44276	37654	38046	392		
										1SH44278	27368	27617	249		
										1SH44315	41908	42246	338		
										1SH44317	20419	20573	154		
										1SH44318	16259	16389	130		
										1SH44319	30644	30982	338		
										1SH44320	22453	22688	235		
										1SH44321	25228	25411	183		
										1SH44322	28790	28963	173		
										1SH44323	17828	18074	246		
										1SH44324	17394	17605	211		
										1SH44325	11084	11268	184		
										1SH44326	20279	20430	151		
										1SH46078	6093	6199	106		
										1SH46080	12928	13072	144		
										1SH46858	26908	27108	200		
										1SH46859	29782	30085	303		
										1SH47186	61597	61977	380		
										1SH50006	31802	32269	467		
										1SH50007	13965	14030	65		

Sl. No.	Name of Division	Name of PSS	Voltage Level	Name of Outgoing 11 kV Feeder	Distribution Transformer Capacity in KVA/ 11 kV Bulk Consumer	Distribution Transformer Location Code/ Bulk Consumer Location	A	B	C=B-A		D	E	F=E-D	G=C-∑F	
							Initial Meter Reading at LT side of DTR (LU)	Final Meter Reading at LT side of DTR (LU)	Energy Consumption at destination end during interval in LU	Consumer ID No./ Meter No.	Initial Meter Reading at Consumer side (U)	Final Meter Reading at Consumer side (U)	Energy Consumption at destination end during interval in Unit	LT Line Loss in LU	% of LT Loss w.r.t Input Energy
										1SH50008	6785	6918	133		
										1SH55667	13751	14251	500		
										1SH57258	41	54	13		
										MS1SH52731	12733	13008	275		
										SH28596	1463	1560	97		
										SH43204	37409	37789	380		
										SH43205	10140	10236	96		
										SH43206	30734	31107	373		
										SH44274	28908	29109	201		
Sub-Total (7)									**0.404**				**37129**	**0.033**	
8	Jayanagar	NIMHANS	66/11KV	11 KV F4 H.Thappa RMU	250	C-191/14TH CROSS LAKKASANDRA ADD	6.508	6.741	0.233	1S14348	5342	5424	82	0.017	7.403
										1S33497	3001	3087	86		
										1S35152	53	95	42		
										1S35213	7259	7317	58		
										1S35440	9313	9375	62		
										1S35665	5352	5400	48		
										1S35747	2659	2718	59		
										1S36490	4377	4506	129		
										1S36517	6051	6163	112		
										1S36992	590	624	34		
										1S37325	8323	8347	24		
										1S37609	1467	1549	82		
										1S37937	13696	13761	65		
										1S37938	1570	1652	82		
										1S37939	7740	7773	33		
										1S37997	7616	7689	73		
										1S38333	9095	9204	109		
										1S38575	8424	8472	48		
										1S38631	7153	7208	55		
										1S38632	7909	7923	14		
										1S38729	2113	2142	29		
										1S39795	8829	8928	99		
										1S39800	8666	8815	149		
										1S40259	3014	3111	97		
										1S40260	9359	9405	46		
										1S42025	2137	2190	53		
										1S42631	9414	9448	34		
										1S43310	2747	2773	26		
										1S43327	5215	5290	75		
										1S43328	7627	7681	54		

Sl. No.	Name of Division	Name of PSS	Voltage Level	Name of Outgoing 11 kV Feeder	Distribution Transformer Capacity in KVA/ 11 kV Bulk Consumer	Distribution Transformer Location Code/ Bulk Consumer Location	A	B	C=B-A		D	E	F=E-D	G=C-∑F	
							Initial Meter Reading at LT side of DTR (LU)	Final Meter Reading at LT side of DTR (LU)	Energy Consumption at destination end during interval in LU	Consumer ID No./ Meter No.	Initial Meter Reading at Consumer side (U)	Final Meter Reading at Consumer side (U)	Energy Consumption at destination end during interval in Unit	LT Line Loss in LU	% of LT Loss w.r.t Input Energy
										1S43481	1790	1822	32		
										1S43495	6584	6700	116		
										1S43562	4223	4299	76		
										1S43810	5665	5692	27		
										1S43811	8016	8087	71		
										1S43949	4642	4708	66		
										1S43950	18164	18236	72		
										1S44022	2428	2455	27		
										1S44023	7364	7393	29		
										1S44024	4424	4483	59		
										1S44025	7232	7325	93		
										1S44349	7423	7480	57		
										1S44366	2766	2784	18		
										1S44369	3029	3096	67		
										1S44370	1096	1195	99		
										1S44371	1294	1316	22		
										1S44376	7702	7719	17		
										1S44431	3081	3107	26		
										1S44543	7343	7399	56		
										1S44552	815	860	45		
										1S44613	202	234	32		
										1S44759	15587	15748	161		
										1S45092	1065	1126	61		
										1S45093	418	455	37		
										1S45096	1154	1157	3		
										1S45103	858	888	30		
										1S45104	300	331	31		
										1S45106	3908	3943	35		
										1S45107	809	825	16		
										1S45110	18497	18549	52		
										1S45111	6712	6795	83		
										1S45112	2318	2406	88		
										1S45114	9560	9622	62		
										1S45115	3500	3537	37		
										1S45116	3193	3222	29		
										1S45117	9004	9108	104		
										1S45118	2996	3051	55		
										1S45119	2716	2725	9		
										1S45120	950	1036	86		
										1S45121	331	333	2		
										1S45123	4858	4889	31		

Sl. No.	Name of Division	Name of PSS	Voltage Level	Name of Outgoing 11 kV Feeder	Distribution Transformer Capacity in KVA/ 11 kV Bulk Consumer	Distribution Transformer Location Code/ Bulk Consumer Location	A	B	C=B-A		D	E	F=E-D	G=C-∑F	
							Initial Meter Reading at LT side of DTR (LU)	Final Meter Reading at LT side of DTR (LU)	Energy Consumption at destination end during interval in LU	Consumer ID No./ Meter No.	Initial Meter Reading at Consumer side (U)	Final Meter Reading at Consumer side (U)	Energy Consumption at destination end during interval in Unit	LT Line Loss in LU	% of LT Loss w.r.t Input Energy
										1S45136	190	193	3		
										1S45137	746	837	91		
										1S45138	690	743	53		
										1S45139	968	1108	140		
										1S45142	3047	3100	53		
										1S45143	3639	3780	141		
										1S45144	835	902	67		
										1S45306	15300	15405	105		
										1S45341	8971	9022	51		
										1S45342	4066	4139	73		
										1S45483	1419	1491	72		
										1S45486	4026	4053	27		
										1S45490	281	311	30		
										1S45491	5755	5815	60		
										1S45492	1917	2052	135		
										1S45494	8152	8277	125		
										1S45495	12242	12399	157		
										1S45496	21990	22109	119		
										1S45501	4083	4100	17		
										1S45502	562	625	63		
										1S45503	2714	2741	27		
										1S45504	393	436	43		
										1S45506	7875	7929	54		
										1S45507	1712	1721	9		
										1S45513	4559	4597	38		
										1S45515	1161	1175	14		
										1S45516	282	282	0		
										1S45517	512	564	52		
										1S45674	9130	9158	28		
										1S45675	11895	11971	76		
										1S45692	5870	5923	53		
										1S45694	4059	4105	46		
										1S45716	2520	2580	60		
										1S45717	410	410	0		
										1S45949	7724	7742	18		
										1S46015	2217	2224	7		
										1S46052	690	751	61		
										1S46122	1715	2047	332		
										1S46125	1049	1056	7		
										1S46160	2745	2771	26		
										1S46161	590	655	65		

Sl. No.	Name of Division	Name of PSS	Voltage Level	Name of Outgoing 11 kV Feeder	Distribution Transformer Capacity in KVA/ 11 kV Bulk Consumer	Distribution Transformer Location Code/ Bulk Consumer Location	A	B	C=B-A		D	E	F=E-D	G=C-∑F	
							Initial Meter Reading at LT side of DTR (LU)	Final Meter Reading at LT side of DTR (LU)	Energy Consumption at destination end during interval in LU	Consumer ID No./ Meter No.	Initial Meter Reading at Consumer side (U)	Final Meter Reading at Consumer side (U)	Energy Consumption at destination end during interval in Unit	LT Line Loss in LU	% of LT Loss w.r.t Input Energy
										1S46162	211	250	39		
										1S46163	2248	2267	19		
										1S46165	662	713	51		
										1S46194	1537	1640	103		
										1S46269	609	648	39		
										1S46303	1767	1778	11		
										1S46305	1577	1590	13		
										1S46307	640	692	52		
										1S46308	530	568	38		
										1S46310	9062	9112	50		
										1S46312	556	610	54		
										1S46315	2579	2623	44		
										1S46317	3057	3065	8		
										1S46318	1031	1101	70		
										1S46346	4095	4114	19		
										1S46348	7194	7245	51		
										1S46349	1164	1256	92		
										1S46352	6973	7004	31		
										1S46353	7123	7165	42		
										1S46357	3835	3891	56		
										1S46359	8209	8315	106		
										1S46361	1558	1685	127		
										1S46362	4891	4944	53		
										1S46363	4457	4583	126		
										1S46364	3183	3203	20		
										1S46370	649	768	119		
										1S46371	5098	5211	113		
										1S46377	2021	2079	58		
										1S46378	8918	9036	118		
										1S46386	3514	3582	68		
										1S46387	5873	5988	115		
										1S46388	5972	6040	68		
										1S46390	2641	2671	30		
										1S46529	7002	7065	63		
										1S46648	6140	6209	69		
										1S46651	787	817	30		
										1S46654	834	889	55		
										1S46660	538	606	68		
										1S46663	1749	1778	29		
										1S46665	529	592	63		
										1S46830	4261	4296	35		

Sl. No.	Name of Division	Name of PSS	Voltage Level	Name of Outgoing 11 kV Feeder	Distribution Transformer Capacity in KVA/ 11 kV Bulk Consumer	Distribution Transformer Location Code/ Bulk Consumer Location	A	B	C=B-A		D	E	F=E-D	G=C-∑F	
							Initial Meter Reading at LT side of DTR (LU)	Final Meter Reading at LT side of DTR (LU)	Energy Consumption at destination end during interval in LU	Consumer ID No./ Meter No.	Initial Meter Reading at Consumer side (U)	Final Meter Reading at Consumer side (U)	Energy Consumption at destination end during interval in Unit	LT Line Loss in LU	% of LT Loss w.r.t Input Energy
										1S47016	2473	2477	4		
										1S47021	27079	27092	13		
										1S47025	1010	1097	87		
										1S47027	3618	3652	34		
										1S47029	5641	5747	106		
										1S47040	4039	4065	26		
										1S47247	6959	7081	122		
										1S47249	4466	4509	43		
										1S47271	7292	7343	51		
										1S47277	3626	3693	67		
										1S47279	1249	1370	121		
										1S47283	4361	4395	34		
										1S47289	5929	5960	31		
										1S47290	439	471	32		
										1S47295	1356	1471	115		
										1S47299	4567	4604	37		
										1S47310	56128	56128	0		
										1S47322	8076	8141	65		
										1S47427	3614	3687	73		
										1S47429	1453	1534	81		
										1S47430	1142	1163	21		
										1S47431	5090	5118	28		
										1S47432	3422	3483	61		
										1S47437	345	371	26		
										1S47438	696	764	68		
										1S47583	40979	41141	162		
										1S47584	851	896	45		
										1S47585	3762	3792	30		
										1S47588	7840	7867	27		
										1S47591	5277	5379	102		
										1S47592	354	383	29		
										1S47593	3679	3740	61		
										1S47594	115	119	4		
										1S47812	7372	7459	87		
										1S47878	16001	16129	128		
										1S48226	4795	4833	38		
										1S48315	8898	8986	88		
										1S48544	4632	4754	122		
										1S48549	5193	5305	112		
										1S48565	2127	2193	66		
										1S48809	8226	8356	130		

Sl. No.	Name of Division	Name of PSS	Voltage Level	Name of Outgoing 11 kV Feeder	Distribution Transformer Capacity in KVA/ 11 kV Bulk Consumer	Distribution Transformer Location Code/ Bulk Consumer Location	A	B	C=B-A		D	E	F=E-D	G=C-∑F	
							Initial Meter Reading at LT side of DTR (LU)	Final Meter Reading at LT side of DTR (LU)	Energy Consumption at destination end during interval in LU	Consumer ID No./ Meter No.	Initial Meter Reading at Consumer side (U)	Final Meter Reading at Consumer side (U)	Energy Consumption at destination end during interval in Unit	LT Line Loss in LU	% of LT Loss w.r.t Input Energy
										1S48898	3606	3619	13		
										1S48968	9869	9969	100		
										1S49031	8547	8630	83		
										1S49035	15106	15391	285		
										1S49147	10990	11093	103		
										1S49148	6949	6989	40		
										1S49413	1457	1464	7		
										1S49788	2899	2915	16		
										1S49789	3054	3086	32		
										1S49791	5691	5725	34		
										1S49796	5515	5636	121		
										1S49819	1712	1727	15		
										1S49845	3466	3467	1		
										1S49848	6069	6187	118		
										1S49849	223	334	111		
										1S49850	910	987	77		
										1S49853	2820	2857	37		
										1S49856	705	742	37		
										1S49859	2128	2260	132		
										1S49860	2426	2450	24		
										1S49862	845	908	63		
										1S49990	5801	5865	64		
										1S49991	4296	4311	15		
										1S49992	7329	7379	50		
										1S49993	3064	3070	6		
										1S49994	5801	5828	27		
										1S50047	16653	16812	159		
										1S50051	11870	11927	57		
										1S50075	7199	7282	83		
										1S50082	3740	3790	50		
										1S50083	3040	3043	3		
										1S50236	13607	13729	122		
										1S50237	5164	5209	45		
										1S50428	6382	6459	77		
										1S50429	4521	4558	37		
										1S50430	13329	13508	179		
										1S50431	2761	2801	40		
										1S50435	2480	2757	277		
										1S50436	2656	2699	43		
										1S50437	6987	7053	66		
										1S50442	421	427	6		

Sl. No.	Name of Division	Name of PSS	Voltage Level	Name of Outgoing 11 kV Feeder	Distribution Transformer Capacity in KVA/ 11 kV Bulk Consumer	Distribution Transformer Location Code/ Bulk Consumer Location	A	B	C=B-A		D	E	F=E-D	G=C-∑F	
							Initial Meter Reading at LT side of DTR (LU)	Final Meter Reading at LT side of DTR (LU)	Energy Consumption at destination end during interval in LU	Consumer ID No./ Meter No.	Initial Meter Reading at Consumer side (U)	Final Meter Reading at Consumer side (U)	Energy Consumption at destination end during interval in Unit	LT Line Loss in LU	% of LT Loss w.r.t Input Energy
										1S50584	12803	12900	97		
										1S50729	16732	16876	144		
										1S50731	4576	4609	33		
										1S50956	3089	3152	63		
										1S50975	7264	7330	66		
										1S50976	5836	5878	42		
										1S50977	10396	10511	115		
										1S51018	5618	5683	65		
										1S51228	3534	3586	52		
										1S52248	3786	3825	39		
										1S52252	1416	1418	2		
										1S52254	6969	7050	81		
										1S52260	9116	9212	96		
										1S52262	16080	16289	209		
										1S52263	6444	6518	74		
										1S52264	3644	3714	70		
										1S52269	4560	4565	5		
										1S52271	3550	3603	53		
										1S52272	9113	9190	77		
										1S52273	5846	5882	36		
										1S52275	3399	3423	24		
										1S52769	4602	4644	42		
										1S53292	18910	19043	133		
										1S53293	5021	5043	22		
										1S53296	4101	4120	19		
										1S53297	5659	5733	74		
										1S53300	2102	2105	3		
										1S53303	5533	5590	57		
										1S53307	3115	3183	68		
										1S53311	2837	2891	54		
										1S53313	2884	2924	40		
										1S53315	5895	5922	27		
										1S53316	7134	7211	77		
										1S53344	3169	3186	17		
										1S53345	2163	2567	404		
										1S53353	3849	3899	50		
										1S53356	5167	5219	52		
										1S53362	2674	2740	66		
										1S53364	5860	5994	134		
										1S53367	8560	8572	12		
										1S53371	3264	3292	28		

Sl. No.	Name of Division	Name of PSS	Voltage Level	Name of Outgoing 11 kV Feeder	Distribution Transformer Capacity in KVA/ 11 kV Bulk Consumer	Distribution Transformer Location Code/ Bulk Consumer Location	A	B	C=B-A		D	E	F=E-D	G=C-∑F	
							Initial Meter Reading at LT side of DTR (LU)	Final Meter Reading at LT side of DTR (LU)	Energy Consumption at destination end during interval in LU	Consumer ID No./ Meter No.	Initial Meter Reading at Consumer side (U)	Final Meter Reading at Consumer side (U)	Energy Consumption at destination end during interval in Unit	LT Line Loss in LU	% of LT Loss w.r.t Input Energy
										1S53372	1777	1917	140		
										1S53376	8971	9080	109		
										1S53384	4724	4768	44		
										1S53407	3432	3470	38		
										1S53421	9270	9418	148		
										1S53422	6339	6398	59		
										1S53449	6751	6799	48		
										1S53563	2254	2371	117		
										1S53566	6494	6556	62		
										1S53567	4245	4310	65		
										1S53648	2927	2990	63		
										1S54366	4762	4802	40		
										1S55780	19976	20298	322		
										1S55846	3743	3943	200		
										1S55853	5179	5245	66		
										1S55999	5641	5711	70		
										1S56299	3490	3557	67		
										1S56693	1925	2024	99		
										1S56957	8570	8764	194		
										1S56966	6011	6047	36		
										1S57521	2924	2991	67		
										1S57617	3148	3211	63		
										1S57619	3091	3124	33		
										1S58870	16363	16621	258		
										1SH37319	9734	9746	12		
										1SH37616	3672	3724	52		
										1SH37618	9433	9500	67		
										1SH37619	15323	15432	109		
										1SH42973	9905	10004	99		
										1SH42974	7862	8018	156		
										1SH42975	8056	8091	35		
										1SH44040	49339	49898	559		
										1SH57414	610	650	40		
										1SP5650	418	618	200		
										MS1S58529	2787	2871	84		
										MS1S58530	1562	1571	9		
										MS1S58531	5392	5412	20		
										MS1S60462	2870	2908	38		
										MS1S60463	993	1023	30		
										MS1S60464	1358	1383	25		

Sl. No.	Name of Division	Name of PSS	Voltage Level	Name of Outgoing 11 kV Feeder	Distribution Transformer Capacity in KVA/ 11 kV Bulk Consumer	Distribution Transformer Location Code/ Bulk Consumer Location	A	B	C=B-A	Consumer ID No./ Meter No.	D	E	F=E-D	G=C-∑F	% of LT Loss w.r.t Input Energy
							Initial Meter Reading at LT side of DTR (LU)	Final Meter Reading at LT side of DTR (LU)	Energy Consumption at destination end during interval in LU		Initial Meter Reading at Consumer side (U)	Final Meter Reading at Consumer side (U)	Energy Consumption at destination end during interval in Unit	LT Line Loss in LU	
										MS1SH52444	256	264	8		
										MS1SH54312	974	992	18		
										S1U1STL091	12376	12576	200		
										S1U1STL155	9936	9986	50		
Sub-Total (8)									**0.233**				**21564**	**0.017**	
9	Jaynagar	Jaydeva	66/11	11 KV F4 H.Thappa RMU	250	TC-24/RAIGUDDA	2.434	2.750	0.317	1S33119	2458	2517	59	0.023	7.314
										1S48104	312	727	415		
										1S48105	439	842	403		
										1S50354	13533	13574	41		
										1S54220	11111	11204	93		
										1S55220	3682	3707	25		
										1S55221	8602	8673	71		
										1S55222	16414	16619	205		
										1S57417	6658	6853	195		
										1S57541	7838	7999	161		
										1S59290	10994	11292	298		
										1S59775	3230	3339	109		
										1S60956	1585	1803	218		
										1S60957	4334	4475	141		
										1S62457	996	1418	422		
										1S63131	1957	2125	168		
										1SH12212	14427	14850	423		
										1SH12381	6167	6600	433		
										1SH12771	19405	19534	129		
										1SH12971	794	967	173		
										1SH14130	11295	11431	136		
										1SH14178	3545	3888	343		
										1SH14254	2614	2817	203		
										1SH14691	851	933	82		
										1SH15417	20854	20993	139		
										1SH15426	12216	12592	376		
										1SH15444	7053	7439	386		
										1SH15739	31305	31471	166		
										1SH16025	2266	2472	206		
										1SH16320	14004	14118	114		
										1SH16321	21744	21811	67		
										1SH17243	10721	10811	90		
										1SH17451	14749	14976	227		
										1SH19573	5093	5464	371		
										1SH20283	2477	2723	246		

Sl. No.	Name of Division	Name of PSS	Voltage Level	Name of Outgoing 11 kV Feeder	Distribution Transformer Capacity in KVA/ 11 kV Bulk Consumer	Distribution Transformer Location Code/ Bulk Consumer Location	A	B	C=B-A		D	E	F=E-D	G=C-∑F	
							Initial Meter Reading at LT side of DTR (LU)	Final Meter Reading at LT side of DTR (LU)	Energy Consumption at destination end during interval in LU	Consumer ID No./ Meter No.	Initial Meter Reading at Consumer side (U)	Final Meter Reading at Consumer side (U)	Energy Consumption at destination end during interval in Unit	LT Line Loss in LU	% of LT Loss w.r.t Input Energy
										1SH20607	33333	33587	254		
										1SH20840	494	541	47		
										1SH20991	4844	4930	86		
										1SH21952	3001	3269	268		
										1SH23067	21437	21600	163		
										1SH24342	2812	3054	242		
										1SH24746	13795	14032	237		
										1SH24905	1785	1933	148		
										1SH25006	2699	2967	268		
										1SH25313	9166	9348	182		
										1SH26561	9551	9617	66		
										1SH26562	6695	6765	70		
										1SH26732	13906	13994	88		
										1SH27288	3025	3245	220		
										1SH27525	37881	38134	253		
										1SH28434	34073	34394	321		
										1SH28482	7029	7095	66		
										1SH30642	871	908	37		
										1SH30665	1480	1595	115		
										1SH30693	826	943	117		
										1SH30765	3768	4078	310		
										1SH30872	33164	33333	169		
										1SH31870	7669	7922	253		
										1SH32201	14065	14127	62		
										1SH32202	16864	17109	245		
										1SH32546	2790	3067	277		
										1SH35179	1589	1708	119		
										1SH36947	5406	5441	35		
										1SH37322	16129	16436	307		
										1SH40495	43209	43479	270		
										1SH40525	14449	14554	105		
										1SH40526	18056	18179	123		
										1SH40599	22986	23188	202		
										1SH41024	23400	23529	129		
										1SH41191	13709	13825	116		
										1SH42524	18292	18403	111		
										1SH43213	36491	36666	175		
										1SH43921	3585	3605	20		
										1SH45010	4679	4803	124		
										1SH45476	15406	15474	68		
										1SH45477	13641	13763	122		

Sl. No.	Name of Division	Name of PSS	Voltage Level	Name of Outgoing 11 kV Feeder	Distribution Transformer Capacity in KVA/ 11 kV Bulk Consumer	Distribution Transformer Location Code/ Bulk Consumer Location	A	B	C=B-A		D	E	F=E-D	G=C-∑F	
							Initial Meter Reading at LT side of DTR (LU)	Final Meter Reading at LT side of DTR (LU)	Energy Consumption at destination end during interval in LU	Consumer ID No./ Meter No.	Initial Meter Reading at Consumer side (U)	Final Meter Reading at Consumer side (U)	Energy Consumption at destination end during interval in Unit	LT Line Loss in LU	% of LT Loss w.r.t Input Energy
										1SH45478	2810	2827	17		
										1SH45868	35183	35391	208		
										1SH46490	12131	12308	177		
										1SH46491	6660	6756	96		
										1SH46492	6835	6880	45		
										1SH46720	12084	12276	192		
										1SH46721	14847	15017	170		
										1SH46836	16360	16425	65		
										1SH46837	9797	9864	67		
										1SH46972	12053	12191	138		
										1SH46973	9627	9723	96		
										1SH46975	2649	2667	18		
										1SH47221	6109	6160	51		
										1SH4828	10945	11267	322		
										1SH4845	12039	12122	83		
										1SH50690	16454	16619	165		
										1SH51725	9230	9410	180		
										1SH6238	3237	3281	44		
										1SH6731	3447	3542	95		
										1SH6732	1665	1762	97		
										1SH6733	2816	2984	168		
										1SH7117	28199	28318	119		
										1SH829	2340	2627	287		
										1SH9279	527	573	46		
										1SH9280	1066	1129	63		
										1SH9281	5204	5400	196		
										1SH9351	436	563	127		
										1SH9567	17535	17768	233		
										1SH9568	16294	16427	133		
										1SH9913	4388	4700	312		
										1SH9929	35804	36053	249		
										1SP2444	155	163	8		
										MS1S55331	39805	40433	628		
										MS1S55332	31687	31742	55		
										MS1S55333	3077	3123	46		
										MS1S55334	57230	58102	872		
										MS1S55336	8051	8120	69		
										MS1S55337	17624	17849	225		
										MS1S55338	9339	9458	119		
										MS1S56149	42139	42447	308		
										MS1S56450	90742	91206	464		

Sl. No.	Name of Division	Name of PSS	Voltage Level	Name of Outgoing 11 kV Feeder	Distribution Transformer Capacity in KVA/ 11 kV Bulk Consumer	Distribution Transformer Location Code/ Bulk Consumer Location	A	B	C=B-A		D	E	F=E-D	G=C-∑F	
							Initial Meter Reading at LT side of DTR (LU)	Final Meter Reading at LT side of DTR (LU)	Energy Consumption at destination end during interval in LU	Consumer ID No./ Meter No.	Initial Meter Reading at Consumer side (U)	Final Meter Reading at Consumer side (U)	Energy Consumption at destination end during interval in Unit	LT Line Loss in LU	% of LT Loss w.r.t Input Energy
										MS1S56451	5527	5586	59		
										MS1S58753	62122	63410	1288		
										MS1S58754	37792	38297	505		
										MS1S58755	17551	17607	56		
										MS1S58756	5502	5673	171		
										MS1S58757	2458	2532	74		
										MS1S58758	10220	10342	122		
										MS1S59037	56132	57065	933		
										MS1S60513	6151	6406	255		
										MS1S60514	1096	1105	9		
										MS1S60515	37928	38761	833		
										MS1S60517	2092	2157	65		
										MS1S60518	9802	10046	244		
										MS1S60519	23035	23782	747		
										MS1S60520	5542	5671	129		
										MS1S60521	15081	15582	501		
										MS1SH50894	7613	7870	257		
										MS1SH50895	27758	28041	283		
										MS1SH53517	9003	9157	154		
										MS1SH53518	5128	5193	65		
										MS1SH53519	10704	10872	168		
										S1U2STL024	6163	7213	1050		
										S1U2STL121	655	945	290		
										SP2237	24149	24270	121		
										SP5192	77	84	7		
Sub-Total (9)									**0.317**				**29363**	**0.023**	
10	Jaynagar	Jaydeva	66/11	11 KV F4 H.Thappa RMU	990	TC-09/MARKET	68.226	68.787	0.562	1S17818	8174	8243	69	0.041	7.258
										1S17820	31985	32299	314		
										1S19058	1106	1345	239		
										1S21567	17339	17545	206		
										1S22823	8268	8464	196		
										1S23906	21314	21723	409		
										1S23907	9451	9497	46		
										1S24069	795	964	169		
										1S24707	9073	9195	122		
										1S24977	5263	5368	105		
										1S25101	4696	4797	101		
										1S25102	7756	7830	74		
										1S25103	5770	5857	87		
										1S27482	4039	4195	156		

Sl. No.	Name of Division	Name of PSS	Voltage Level	Name of Outgoing 11 kV Feeder	Distribution Transformer Capacity in KVA/ 11 kV Bulk Consumer	Distribution Transformer Location Code/ Bulk Consumer Location	A	B	C=B-A		D	E	F=E-D	G=C-∑F	
							Initial Meter Reading at LT side of DTR (LU)	Final Meter Reading at LT side of DTR (LU)	Energy Consumption at destination end during interval in LU	Consumer ID No./ Meter No.	Initial Meter Reading at Consumer side (U)	Final Meter Reading at Consumer side (U)	Energy Consumption at destination end during interval in Unit	LT Line Loss in LU	% of LT Loss w.r.t Input Energy
										1S27483	9972	10046	74		
										1S27485	22007	22070	63		
										1S27486	10610	10671	61		
										1S28343	341	651	310		
										1S28344	210	284	74		
										1S28345	7433	7581	148		
										1S28894	1410	1423	13		
										1S29292	13879	13963	84		
										1S29957	2086	2110	24		
										1S30115	440	510	70		
										1S30736	4965	5153	188		
										1S30737	6486	6509	23		
										1S31031	2410	2429	19		
										1S31149	4938	4972	34		
										1S31176	9083	9227	144		
										1S31405	6600	6688	88		
										1S32183	3673	3752	79		
										1S32960	1874	1951	77		
										1S32961	2430	2448	18		
										1S32962	8288	8388	100		
										1S3377	9096	9146	50		
										1S3378	3424	3436	12		
										1S34037	2776	2806	30		
										1S34122	6121	6182	61		
										1S34123	9162	9186	24		
										1S35771	5118	5155	37		
										1S35772	6558	6588	30		
										1S35805	35673	35875	202		
										1S36051	6232	6277	45		
										1S36354	5335	5598	263		
										1S36355	1433	1552	119		
										1S36356	2142	2165	23		
										1S36535	2547	2658	111		
										1S36621	6078	6078	0		
										1S36694	6689	6757	68		
										1S36695	11502	11603	101		
										1S39169	7321	7488	167		
										1S39468	19704	20021	317		
										1S39637	8676	8805	129		
										1S39638	27846	28474	628		
										1S41165	1747	1768	21		

Sl. No.	Name of Division	Name of PSS	Voltage Level	Name of Outgoing 11 kV Feeder	Distribution Transformer Capacity in KVA/ 11 kV Bulk Consumer	Distribution Transformer Location Code/ Bulk Consumer Location	A	B	C=B-A		D	E	F=E-D	G=C-∑F	
							Initial Meter Reading at LT side of DTR (LU)	Final Meter Reading at LT side of DTR (LU)	Energy Consumption at destination end during interval in LU	Consumer ID No./ Meter No.	Initial Meter Reading at Consumer side (U)	Final Meter Reading at Consumer side (U)	Energy Consumption at destination end during interval in Unit	LT Line Loss in LU	% of LT Loss w.r.t Input Energy
										1S41166	6591	6645	54		
										1S41194	15432	15679	247		
										1S41226	5568	5673	105		
										1S41227	1517	1619	102		
										1S41230	10147	10230	83		
										1S41231	4683	4771	88		
										1S41262	1451	1700	249		
										1S41588	24	128	104		
										1S42207	8977	9054	77		
										1S42209	2839	2916	77		
										1S42359	9478	9609	131		
										1S42360	2021	2120	99		
										1S42571	3494	3519	25		
										1S42576	9421	9501	80		
										1S42581	377	537	160		
										1S42787	1398	1501	103		
										1S42817	5277	5351	74		
										1S42984	6641	6746	105		
										1S42985	296	432	136		
										1S43052	4837	5055	218		
										1S43125	933	937	4		
										1S43284	6167	6203	36		
										1S43285	9811	9948	137		
										1S43287	773	1028	255		
										1S43318	3039	3075	36		
										1S43385	6111	6119	8		
										1S43524	5290	5300	10		
										1S43525	3970	4076	106		
										1S43526	9356	9426	70		
										1S43527	488	528	40		
										1S45289	23141	23279	138		
										1S45296	6702	6745	43		
										1S45302	5928	6064	136		
										1S45303	2825	2878	53		
										1S45304	369	590	221		
										1S45427	1194	1286	92		
										1S45637	7283	7319	36		
										1S45811	23441	23488	47		
										1S45937	9816	9854	38		
										1S46073	18691	18884	193		
										1S46557	81535	82298	763		

Sl. No.	Name of Division	Name of PSS	Voltage Level	Name of Outgoing 11 kV Feeder	Distribution Transformer Capacity in KVA/ 11 kV Bulk Consumer	Distribution Transformer Location Code/ Bulk Consumer Location	A	B	C=B-A		D	E	F=E-D	G=C-∑F	
							Initial Meter Reading at LT side of DTR (LU)	Final Meter Reading at LT side of DTR (LU)	Energy Consumption at destination end during interval in LU	Consumer ID No./ Meter No.	Initial Meter Reading at Consumer side (U)	Final Meter Reading at Consumer side (U)	Energy Consumption at destination end during interval in Unit	LT Line Loss in LU	% of LT Loss w.r.t Input Energy
										1S46618	2186	2476	290		
										1S47384	5568	5829	261		
										1S47681	266490	267721	1231		
										1S48062	5961	6012	51		
										1S48206	11307	11374	67		
										1S48423	4854	4896	42		
										1S48424	6577	6611	34		
										1S48588	4653	4769	116		
										1S48891	6643	6676	33		
										1S48892	6826	6889	63		
										1S49700	5388	5407	19		
										1S49745	2473	2494	21		
										1S50421	7456	7458	2		
										1S50658	1825	1826	1		
										1S50675	12214	12359	145		
										1S50909	10334	10467	133		
										1S51667	6244	6303	59		
										1S51674	6095	6207	112		
										1S52045	9956	10221	265		
										1S53682	8203	8251	48		
										1S53698	9279	9373	94		
										1S53699	15060	15194	134		
										1S53717	5140	5367	227		
										1S53785	21709	21769	60		
										1S53786	15201	15332	131		
										1S53837	7450	7517	67		
										1S53838	1184	1199	15		
										1S53864	10622	10686	64		
										1S53900	13538	13540	2		
										1S53906	6525	6601	76		
										1S53927	8879	8955	76		
										1S53928	6431	6562	131		
										1S53948	11654	11842	188		
										1S54204	2478	2515	37		
										1S54312	14063	14173	110		
										1S54623	10808	10968	160		
										1S54624	561	568	7		
										1S54996	12059	12284	225		
										1S55219	11368	11487	119		
										1S55376	892	942	50		

Sl. No.	Name of Division	Name of PSS	Voltage Level	Name of Outgoing 11 kV Feeder	Distribution Transformer Capacity in KVA/ 11 kV Bulk Consumer	Distribution Transformer Location Code/ Bulk Consumer Location	A	B	C=B-A		D	E	F=E-D	G=C-∑F	
							Initial Meter Reading at LT side of DTR (LU)	Final Meter Reading at LT side of DTR (LU)	Energy Consumption at destination end during interval in LU	Consumer ID No./ Meter No.	Initial Meter Reading at Consumer side (U)	Final Meter Reading at Consumer side (U)	Energy Consumption at destination end during interval in Unit	LT Line Loss in LU	% of LT Loss w.r.t Input Energy
										1S55377	3121	3213	92		
										1S55378	6997	7056	59		
										1S55379	3488	3527	39		
										1S55380	4081	4181	100		
										1S55552	13661	13827	166		
										1S55727	13139	13272	133		
										1S55728	14277	14397	120		
										1S55773	874	892	18		
										1S55898	8369	8503	134		
										1S56597	6684	6733	49		
										1S57247	3782	3836	54		
										1S57248	1688	1720	32		
										1S61119	1627	1676	49		
										1S61324	3553	3709	156		
										1S61325	13538	14145	607		
										1S62371	1710	1810	100		
										1S62936	3613	3804	191		
										1S62937	207	231	24		
										1S62939	5812	6532	720		
										1S63245	340	396	56		
										1S63246	225	276	51		
										1S63247	243	267	24		
										1SH10122	21763	22883	1120		
										1SH12659	6271	6386	115		
										1SH12660	7353	7358	5		
										1SH12661	9182	9209	27		
										1SH12662	2234	2285	51		
										1SH12844	7141	7292	151		
										1SH13045	3567	3580	13		
										1SH13046	9545	9595	50		
										1SH13047	4663	4762	99		
										1SH13048	8193	8329	136		
										1SH14173	1262	1346	84		
										1SH14236	6215	6362	147		
										1SH14290	247	399	152		
										1SH15049	5208	5251	43		
										1SH15357	953	1119	166		
										1SH15445	12865	12997	132		
										1SH15520	3602	3697	95		
										1SH15521	3692	3802	110		

Sl. No.	Name of Division	Name of PSS	Voltage Level	Name of Outgoing 11 kV Feeder	Distribution Transformer Capacity in KVA/ 11 kV Bulk Consumer	Distribution Transformer Location Code/ Bulk Consumer Location	A	B	C=B-A		D	E	F=E-D	G=C-∑F	
							Initial Meter Reading at LT side of DTR (LU)	Final Meter Reading at LT side of DTR (LU)	Energy Consumption at destination end during interval in LU	Consumer ID No./ Meter No.	Initial Meter Reading at Consumer side (U)	Final Meter Reading at Consumer side (U)	Energy Consumption at destination end during interval in Unit	LT Line Loss in LU	% of LT Loss w.r.t Input Energy
										1SH15621	7735	7758	23		
										1SH15622	7175	7218	43		
										1SH15623	14476	14675	199		
										1SH15624	4809	4878	69		
										1SH15625	3905	3941	36		
										1SH15626	6458	6565	107		
										1SH16154	8411	8505	94		
										1SH16549	11000	11093	93		
										1SH16550	2903	2938	35		
										1SH16761	11466	11500	34		
										1SH16954	8635	8777	142		
										1SH17484	8798	8905	107		
										1SH17543	5107	5268	161		
										1SH17544	5887	5897	10		
										1SH18479	22035	22337	302		
										1SH18560	24399	24601	202		
										1SH18561	542	615	73		
										1SH21778	9291	9384	93		
										1SH21951	8291	8411	120		
										1SH22042	19148	19307	159		
										1SH22577	20162	20332	170		
										1SH22814	17472	17673	201		
										1SH22815	7965	8088	123		
										1SH22816	4620	4700	80		
										1SH22817	7905	7913	8		
										1SH22818	5016	5080	64		
										1SH23164	17351	17457	106		
										1SH23189	8642	8858	216		
										1SH23190	10915	11023	108		
										1SH23575	14883	15104	221		
										1SH25508	6447	6530	83		
										1SH25680	14247	14310	63		
										1SH25799	1882	1934	52		
										1SH25800	9887	9906	19		
										1SH25811	7110	7197	87		
										1SH26144	8904	8994	90		
										1SH26145	4454	4459	5		
										1SH26146	11143	11307	164		
										1SH26147	27755	27790	35		
										1SH26264	5362	5397	35		

Sl. No.	Name of Division	Name of PSS	Voltage Level	Name of Outgoing 11 kV Feeder	Distribution Transformer Capacity in KVA/ 11 kV Bulk Consumer	Distribution Transformer Location Code/ Bulk Consumer Location	A	B	C=B-A		D	E	F=E-D	G=C-∑F	
							Initial Meter Reading at LT side of DTR (LU)	Final Meter Reading at LT side of DTR (LU)	Energy Consumption at destination end during interval in LU	Consumer ID No./ Meter No.	Initial Meter Reading at Consumer side (U)	Final Meter Reading at Consumer side (U)	Energy Consumption at destination end during interval in Unit	LT Line Loss in LU	% of LT Loss w.r.t Input Energy
										1SH27210	5529	5619	90		
										1SH27291	12397	12466	69		
										1SH27292	314	566	252		
										1SH27612	40192	40382	190		
										1SH27613	1817	1834	17		
										1SH28017	2432	2589	157		
										1SH28548	22381	22434	53		
										1SH31103	4844	4845	1		
										1SH31749	9092	9154	62		
										1SH33464	4534	4663	129		
										1SH33736	7044	7060	16		
										1SH34188	2842	2922	80		
										1SH34189	7716	7769	53		
										1SH34190	4899	5021	122		
										1SH35478	23313	23556	243		
										1SH35516	370	462	92		
										1SH35517	3361	3441	80		
										1SH35996	6676	6703	27		
										1SH35997	5083	5229	146		
										1SH36274	6606	6774	168		
										1SH37381	8929	9325	396		
										1SH38010	8068	8141	73		
										1SH38011	21386	21480	94		
										1SH38182	696	844	148		
										1SH38659	28613	28838	225		
										1SH38704	6391	6620	229		
										1SH38705	6607	6818	211		
										1SH38868	29714	29759	45		
										1SH38982	1660	1947	287		
										1SH38983	15637	15702	65		
										1SH38984	5438	5498	60		
										1SH39400	5294	5334	40		
										1SH39447	11355	11510	155		
										1SH40251	11349	11447	98		
										1SH40252	17611	17657	46		
										1SH40334	2537	2712	175		
										1SH40566	8869	9015	146		
										1SH40567	3272	3377	105		
										1SH40568	19010	19271	261		
										1SH40596	6027	6173	146		

Sl. No.	Name of Division	Name of PSS	Voltage Level	Name of Outgoing 11 kV Feeder	Distribution Transformer Capacity in KVA/ 11 kV Bulk Consumer	Distribution Transformer Location Code/ Bulk Consumer Location	A	B	C=B-A		D	E	F=E-D	G=C-∑F	
							Initial Meter Reading at LT side of DTR (LU)	Final Meter Reading at LT side of DTR (LU)	Energy Consumption at destination end during interval in LU	Consumer ID No./ Meter No.	Initial Meter Reading at Consumer side (U)	Final Meter Reading at Consumer side (U)	Energy Consumption at destination end during interval in Unit	LT Line Loss in LU	% of LT Loss w.r.t Input Energy
										1SH40597	9996	10147	151		
										1SH40598	19396	19810	414		
										1SH40739	31512	31836	324		
										1SH40869	23821	24067	246		
										1SH41192	2684	2948	264		
										1SH41193	22827	22976	149		
										1SH41197	18850	18956	106		
										1SH41198	11255	11345	90		
										1SH41271	5847	5962	115		
										1SH41272	2937	3068	131		
										1SH41273	6420	6514	94		
										1SH41274	4812	4881	69		
										1SH41275	8389	8479	90		
										1SH42391	4523	4568	45		
										1SH42473	7094	7145	51		
										1SH42474	8764	9000	236		
										1SH42475	7358	7439	81		
										1SH42476	9376	9519	143		
										1SH42795	16333	16404	71		
										1SH43017	18483	18705	222		
										1SH43018	11798	11898	100		
										1SH43019	3558	3594	36		
										1SH43053	24219	24298	79		
										1SH43054	11627	11678	51		
										1SH43070	21380	21540	160		
										1SH44061	6847	6878	31		
										1SH44062	18920	18987	67		
										1SH44063	8301	8371	70		
										1SH44064	9831	9886	55		
										1SH44065	9313	9485	172		
										1SH44777	49148	49330	182		
										1SH44778	20223	20420	197		
										1SH44779	19505	19554	49		
										1SH44780	4350	4388	38		
										1SH44840	1210	1224	14		
										1SH44959	9562	9813	251		
										1SH45205	15824	15980	156		
										1SH45206	12039	12180	141		
										1SH45845	7202	7276	74		
										1SH45846	14811	14957	146		

Sl. No.	Name of Division	Name of PSS	Voltage Level	Name of Outgoing 11 kV Feeder	Distribution Transformer Capacity in KVA/ 11 kV Bulk Consumer	Distribution Transformer Location Code/ Bulk Consumer Location	A	B	C=B-A		D	E	F=E-D	G=C-∑F	
							Initial Meter Reading at LT side of DTR (LU)	Final Meter Reading at LT side of DTR (LU)	Energy Consumption at destination end during interval in LU	Consumer ID No./ Meter No.	Initial Meter Reading at Consumer side (U)	Final Meter Reading at Consumer side (U)	Energy Consumption at destination end during interval in Unit	LT Line Loss in LU	% of LT Loss w.r.t Input Energy
										1SH45847	17390	17586	196		
										1SH45848	2065	2089	24		
										1SH46319	14399	14526	127		
										1SH47137	13153	13353	200		
										1SH47545	3791	3849	58		
										1SH47546	5955	6043	88		
										1SH48870	15804	15902	98		
										1SH48871	16834	17096	262		
										1SH48873	7550	7728	178		
										1SH49545	2788	2808	20		
										1SH50020	13455	13750	295		
										1SH51857	10613	10861	248		
										1SH51858	12766	13016	250		
										1SH51859	9104	9239	135		
										1SH51860	2266	2307	41		
										1SH54970	2127	2197	70		
										1SH55293	12881	13446	565		
										1SH55371	300	306	6		
										1SH55687	7086	7275	189		
										1SH56658	1713	1791	78		
										1SH56659	1003	1057	54		
										1SH56660	3661	3924	263		
										1SH56661	1133	1239	106		
										1SH56715	529	582	53		
										1SH56815	1294	1393	99		
										1SH56915	2156	2695	539		
										1SH56916	3707	3926	219		
										1SH57315	399	472	73		
										1SH57349	992	1058	66		
										1SH57404	276	348	72		
										1SH57405	1205	1340	135		
										1SH57406	222	243	21		
										1SH8527	13018	13249	231		
										1SH9228	8436	8750	314		
										1SH9714	1617	1765	148		
										1SP2590	419	427	8		
										1SP4023	59	173	114		
										1SP4168	1554	1574	20		
										1SP4611	5648	5659	11		
										1SP5326	4768	4918	150		

Sl. No.	Name of Division	Name of PSS	Voltage Level	Name of Outgoing 11 kV Feeder	Distribution Transformer Capacity in KVA/ 11 kV Bulk Consumer	Distribution Transformer Location Code/ Bulk Consumer Location	A	B	C=B-A		D	E	F=E-D	G=C-∑F	
							Initial Meter Reading at LT side of DTR (LU)	Final Meter Reading at LT side of DTR (LU)	Energy Consumption at destination end during interval in LU	Consumer ID No./ Meter No.	Initial Meter Reading at Consumer side (U)	Final Meter Reading at Consumer side (U)	Energy Consumption at destination end during interval in Unit	LT Line Loss in LU	% of LT Loss w.r.t Input Energy
										AP5803	56762	56884	122		
										ISH21579	10378	10618	240		
										ISH46318	4404	4502	98		
										MS1S54646	2894	2949	55		
										MS1S54647	7547	7593	46		
										MS1S54648	87852	88618	766		
										MS1S58869	12188	12334	146		
										MS1S59487	2034	2078	44		
										MS1S59488	5194	5289	95		
										MS1S59694	6728	6841	113		
										MS1S59695	2524	2549	25		
										MS1S60412	1991	2000	9		
										MS1S60466	3186	3199	13		
										MS1S60467	1223	1241	18		
										MS1S60525	75938	77798	1860		
										MS1S61282	1049	1069	20		
										MS1S61283	12853	13257	404		
										MS1S61284	15797	16306	509		
										MS1S61285	19636	20275	639		
										MS1S61286	15156	15871	715		
										MS1S61287	14081	14543	462		
										MS1S61288	13539	13861	322		
										MS1SH46365	18572	18803	231		
										MS1SH46366	11750	11757	7		
										MS1SH46367	9812	9867	55		
										MS1SH46368	8409	8444	35		
										MS1SH49144	7368	7489	121		
										MS1SH52615	4951	5053	102		
										MS1SH52616	4768	4836	68		
										MS1SH52617	4236	4271	35		
										MS1SH52618	6298	6421	123		
										MS1SH52619	8127	8205	78		
										MS1SH53413	3691	3755	64		
										MS1SH53557	736	752	16		
										MS1SH54279	595	602	7		
										MS1SH54313	741	759	18		
										SH42794	15982	16038	56		
										SP1642	76741	76741	0		
										SP2393	83554	83910	356		
										SP3495	91001	91332	331		

Sl. No.	Name of Division	Name of PSS	Voltage Level	Name of Outgoing 11 kV Feeder	Distribution Transformer Capacity in KVA/ 11 kV Bulk Consumer	Distribution Transformer Location Code/ Bulk Consumer Location	A	B	C=B-A	Consumer ID No./ Meter No.	D	E	F=E-D	G=C-∑F	% of LT Loss w.r.t Input Energy
							Initial Meter Reading at LT side of DTR (LU)	Final Meter Reading at LT side of DTR (LU)	Energy Consumption at destination end during interval in LU		Initial Meter Reading at Consumer side (U)	Final Meter Reading at Consumer side (U)	Energy Consumption at destination end during interval in Unit	LT Line Loss in LU	
										SP4025	85626	85626	0		
										SP4204	62659	63065	406		
										SP4248	26722	26723	1		
										SP4249	2195	2262	67		
										SP4345	651	770	119		
										SP4539	2958	3116	158		
										SP4726	9915	10156	241		
										SP4848	94728	95433	705		
										SP5142	4710	4778	68		
Sub-Total (10)									**0.562**				**52095**	**0.041**	
11	Jaynagar	Sarraki	66/11		250	164/RAJKUMAR KUKREJA,11TH MAIN/	8.615	9.056	0.441	1S12797	15281	15384	103	0.031	7.042
										1S1953A	82351	83667	1316		
										1S24376	432	438	6		
										1S24377	1099	1299	200		
										1S24378	2570	2771	201		
										1S24379	3445	3841	396		
										1S34716	9031	9538	507		
										1S37241	14374	14758	384		
										1S37242	19954	21501	1547		
										1S37243	17465	17665	200		
										1S37244	35335	35755	420		
										1S37245	8264	8505	241		
										1S45895	1312	1447	135		
										1S45897	2389	2497	108		
										1S48697	9430	9528	98		
										1S49014	2395	2467	72		
										1S49139	44852	45037	185		
										1S49140	4793	4856	63		
										1S50592	490	522	32		
										1S50599	9564	10240	676		
										1S53930	13534	13612	78		
										1S54329	4131	4260	129		
										1S58830	8466	9640	1174		
										1S62711	8554	9297	743		
										1S9360	88597	92333	3736		
										1SH10046	14892	15423	531		
										1SH12367	6647	6654	7		
										1SH1262	1742	1997	255		
										1SH1269	17916	18052	136		
										1SH12947	9341	9589	248		

Sl. No.	Name of Division	Name of PSS	Voltage Level	Name of Outgoing 11 kV Feeder	Distribution Transformer Capacity in KVA/ 11 kV Bulk Consumer	Distribution Transformer Location Code/ Bulk Consumer Location	A	B	C=B-A		D	E	F=E-D	G=C-∑F	
							Initial Meter Reading at LT side of DTR (LU)	Final Meter Reading at LT side of DTR (LU)	Energy Consumption at destination end during interval in LU	Consumer ID No./ Meter No.	Initial Meter Reading at Consumer side (U)	Final Meter Reading at Consumer side (U)	Energy Consumption at destination end during interval in Unit	LT Line Loss in LU	% of LT Loss w.r.t Input Energy
										1SH13415	92811	94180	1369		
										1SH13806	5560	5702	142		
										1SH1877	598	795	197		
										1SH22462	18542	18715	173		
										1SH23429	3524	3558	34		
										1SH23630	16768	16980	212		
										1SH30204	1807	2143	336		
										1SH3219	17961	18261	300		
										1SH3220	42195	42490	295		
										1SH32518	4230	4431	201		
										1SH32550	3324	3526	202		
										1SH33302	2011	2109	98		
										1SH33303	8589	8829	240		
										1SH33588	1574	1616	42		
										1SH38596	5068	5767	699		
										1SH38597	3459	3859	400		
										1SH39728	6590	6790	200		
										1SH39729	1326	1526	200		
										1SH40968	6478	6709	231		
										1SH41990	37588	37844	256		
										1SH44039	14276	14480	204		
										1SH44970	3113	3724	611		
										1SH45123	12914	12970	56		
										1SH46883	3663	3683	20		
										1SH46884	26505	26762	257		
										1SH4964	1710	1879	169		
										1SH52672	11390	11518	128		
										1SH52673	12298	12546	248		
										1SH52674	9107	9262	155		
										1SH52675	10013	10154	141		
										1SH52676	9798	9958	160		
										1SH52677	8206	8342	136		
										1SH5353	95983	96211	228		
										1SH54936	2932	2964	32		
										1SH56719	2026	2165	139		
										1SH5750	16334	16475	141		
										1SH5864	2409	2409	0		
										1SH6267	46569	46732	163		
										1SH63	8015	8244	229		
										1SH6854	3707	3760	53		

Sl. No.	Name of Division	Name of PSS	Voltage Level	Name of Outgoing 11 kV Feeder	Distribution Transformer Capacity in KVA/ 11 kV Bulk Consumer	Distribution Transformer Location Code/ Bulk Consumer Location	A	B	C=B-A		D	E	F=E-D	G=C-∑F	
							Initial Meter Reading at LT side of DTR (LU)	Final Meter Reading at LT side of DTR (LU)	Energy Consumption at destination end during interval in LU	Consumer ID No./ Meter No.	Initial Meter Reading at Consumer side (U)	Final Meter Reading at Consumer side (U)	Energy Consumption at destination end during interval in Unit	LT Line Loss in LU	% of LT Loss w.r.t Input Energy
										1SH6919	17501	17862	361		
										1SH8433	2940	3166	226		
										1SH8490	970	1172	202		
										1SP4340	38689	38703	14		
										1SP4755	7671	7689	18		
										AP5672	6636	11105	4469		
										MS1S60715	2233	10335	8102		
										MS1SH53445	11970	12232	262		
										MS1SH53446	16805	17031	226		
										MS1SH53447	12560	12714	154		
										MS1SH53448	6745	6852	107		
										MS1SH53449	3781	3849	68		
										SH37522	8245	8454	209		
										SH37523	7411	7897	486		
										SH37524	8899	9013	114		
										SH37525	654	909	255		
										SH40967	4628	5130	502		
										SH41876	11857	12294	437		
										SH41923	1680	1872	192		
										SH42299	8721	8795	74		
										SH42300	1085	1088	3		
										SH42481	5733	5749	16		
										SH45702	17895	18070	175		
										SH45703	22752	23170	418		
										SH45704	1210	1217	7		
										SP1430	3384	3395	11		
										SP3035	72448	73186	738		
										SP4571	5648	5776	128		
Sub-Total (11)									**0.441**				**40998**	**0.031**	
12					100	_158/KP.KIRANKUMAR, 9TH MAIN SP/1	1.462	1.485	0.023	MS1S57825	10487	12117	1630	0.001	6.003
										MS1S61250	6929	7208	279		
										MS1S61254	5390	5689	299		
Sub-Total (12)									**0.023**				**2208**	**0.001**	

Sl. No.	Name of Division	Name of PSS	Voltage Level	Name of Outgoing 11 kV Feeder	Distribution Transformer Capacity in KVA/ 11 kV Bulk Consumer	Distribution Transformer Location Code/ Bulk Consumer Location	A	B	C=B-A		D	E	F=E-D	G=C-∑F	
							Initial Meter Reading at LT side of DTR (LU)	Final Meter Reading at LT side of DTR (LU)	Energy Consumption at destination end during interval in LU	Consumer ID No./ Meter No.	Initial Meter Reading at Consumer side (U)	Final Meter Reading at Consumer side (U)	Energy Consumption at destination end during interval in Unit	LT Line Loss in LU	% of LT Loss w.r.t Input Energy
13					990	TC_08/WATER SUPPLY TC/990	38.261	38.517	0.257	1S32243	6068	6274	206	0.024	9.192
										1S32244	8777	8983	206		
										1S48253	458	914	456		
										1S51475	3885	4108	223		
										1S51935	398	804	406		
										1S58444	8716	9558	842		
										1S59855	23445	24157	712		
										1S59856	34937	38199	3262		
										1S59857	39844	40986	1142		
										1S59858	86038	88960	2922		
										1SH14286	2949	3007	58		
										1SH16052	2600	2807	207		
										1SH16053	2094	2860	766		
										1SH16054	3123	3272	149		
										1SH16055	48578	48693	115		
										1SH16950	1430	1646	216		
										1SH20040	702	1235	533		
										1SH20313	1843	2282	439		
										1SH2754	1961	2378	417		
										1SH31317	7011	7194	183		
										1SH3286	11113	11383	270		
										1SH33236	4954	5024	70		
										1SH35503	112010	113313	1303		
										1SH36681	7696	7788	92		
										1SH36909	25	243	218		
										1SH38233	15036	15084	48		
										1SH39397	12246	12506	260		
										1SH40482	5603	5611	8		
										1SH42427	20756	20881	125		
										1SH44671	7464	7600	136		
										1SH456	4399	4583	184		
										1SH47510	18028	18250	222		
										1SH5631	4039	4210	171		
										1SH5713	2773	2973	200		
										1SH7160	2855	3276	421		
										1SP3620	9041	9208	167		
										1SP4404	6890	7051	161		
										1SP4426	4803	5695	892		
										1SP5039	53289	53725	436		
										MS1SH49215	44619	45477	858		

Sl. No.	Name of Division	Name of PSS	Voltage Level	Name of Outgoing 11 kV Feeder	Distribution Transformer Capacity in KVA/ 11 kV Bulk Consumer	Distribution Transformer Location Code/ Bulk Consumer Location	A	B	C=B-A		D	E	F=E-D	G=C-∑F	
							Initial Meter Reading at LT side of DTR (LU)	Final Meter Reading at LT side of DTR (LU)	Energy Consumption at destination end during interval in LU	Consumer ID No./ Meter No.	Initial Meter Reading at Consumer side (U)	Final Meter Reading at Consumer side (U)	Energy Consumption at destination end during interval in Unit	LT Line Loss in LU	% of LT Loss w.r.t Input Energy
										MS1SH49771	17230	17420	190		
										MS1SH49772	16606	16886	280		
										MS1SH49773	20932	21280	348		
										MS1SH49774	18010	18251	241		
										MS1SH49775	10598	10878	280		
										MS1SH53141	64640	65818	1178		
										S1U3STL008	5918	7003	1085		
Sub-Total (13)									**0.257**				**23304**	**0.024**	
TOTAL [(Sub-Total (1) to (13)									**4.199**	**LT LINE + COMMERCIAL LOSS IN LU**				**0.331**	**7.890**
TOTAL INPUT ENERGY OF DTR IN BANGLORE SOUTH CIRCLE IN LU (11KV SIDE INPUT ENERGY - 11 KV LINE LOSS)									**4036.441**	**TOTAL LT+ COMMERCIAL LOSS w.r.t DTR INPUT ENERGY IN BANGLORE SOUTH CIRCLE IN LU**				**318.469**	**7.890**
TOTAL INPUT ENERGY 11KV SIDE IN BANGLORE SOUTH CIRCLE IN LU									**4239.000**	**TOTAL LT+ COMMERCIAL LOSS w.r.t. 11 kV SIDE INPUT ENERGY IN BANGLORE SOUTH CIRCLE IN LU**				**318.469**	**7.513**

LT LINE LOSS & COMMERCIAL LOSS DUE TO THEFT ASSESSMENT DETAIL OF HUBLI CIRCLE IN KARNATAKA STATE

STUDY ON COMPONENT-WISE AT&C LOSSES ASSESSMENT FOR THE STATE OF KARNATAKA

E. LT LINE LOSS & COMMERCIAL LOSS DUE TO THEFT ASSESSMENT DETAIL OF HUBLI CIRCLE

Sl.No.	Name of Division	Name of PSS	Voltage Level	Name of Outgoing 11 kV Feeder	Distribution Transformer Capacity in KVA/ 11 kV Bulk Consumer	Distribution Transformer Location Code/ Bulk Consumer Location	A	B	C=B-A	Consumer ID No./ Meter No.	D	E	F=E-D	G=C-∑F	% of LT Loss w.r.t Input Energy
							Initial Meter Reading at LT side of DTR (LU)	Final Meter Reading at LT side of DTR (LU)	Energy Consumption at destination end during interval in LU		Initial Meter Reading at Consumer side (U)	Final Meter Reading at Consumer side (U)	Energy Consumption at destination end during interval in Unit	LT Line Loss in LU	
1	**HUBLI**	PH	110/11KV	Mangalawar peth	100	Pai Maharaj TC	3.451	3.605	0.154	220602A			23	0.032	20.435
2										220603A			45		
3										R10035			53		
4										R10036C			4		
5										R10053A			142		
6										R10491A			144		
7										R10789A			71		
8										R11125A			160		
9										R11137A			150		
10										R11138A			245		
11										R11482A			491		
12										R12273A			41		
13										R15364			392		
14										R15367			66		
15										R15387C			35		
16										R15389C			8		
18										R15391C			342		
19										R16344			35		
20										R16345			292		
21										R16649C			10		
22										R1689A			311		
23										R1690A			162		
24										R17153			0		
25										R18579C			57		
26										R18827			54		
27										R18848			55		
28										R20796C			3		
29										R21114			28		
30										R2161A			219		
31										R22550C			69		
32										R2307			6		
33										R2554A			37		
34										R26040C			7		
35										R2756C			74		
36										R303680			43		
37										R3047A			47		

Sl.No.	Name of Division	Name of PSS	Voltage Level	Name of Outgoing 11 kV Feeder	Distribution Transformer Capacity in KVA/ 11 kV Bulk Consumer	Distribution Transformer Location Code/ Bulk Consumer Location	A	B	C=B-A	Consumer ID No./ Meter No.	D	E	F=E-D	G=C-∑F	% of LT Loss w.r.t Input Energy
							Initial Meter Reading at LT side of DTR (LU)	Final Meter Reading at LT side of DTR (LU)	Energy Consumption at destination end during interval in LU		Initial Meter Reading at Consumer side (U)	Final Meter Reading at Consumer side (U)	Energy Consumption at destination end during interval in Unit	LT Line Loss in LU	
38										R3084			74		
39										R3085A			110		
42										R314073C			15		
43										R314992			44		
44										R314993			63		
45										R316505			40		
46										R316638C			56		
47										R316639			71		
48										R316640			102		
49										R318937A			99		
50										R318938A			133		
51										R318939A			32		
52										R318940C			11		
53										R32086			1		
54										R324764			20		
55										R3297A			113		
56										R33132C			2		
57										R33133C			65		
58										R33134C			21		
59										R33135C			106		
60										R332309C			55		
61										R332310C			44		
62										R33626C			45		
63										R33736C			23		
64										R3392A			241		
65										R34922			28		
66										R34923			125		
67										R34924			0		
68										R35288C			38		
69										R3585C			44		
72										R35C			222		
73										R36743C			40		
74										R3832A			115		
75										R38363C			20		
76										R38480C			22		
77										R408A			61		
78										R41033C			19		
79										R4151			86		
80										R42101C			7		
83										R42546C			14		

Sl.No.	Name of Division	Name of PSS	Voltage Level	Name of Outgoing 11 kV Feeder	Distribution Transformer Capacity in KVA/ 11 kV Bulk Consumer	Distribution Transformer Location Code/ Bulk Consumer Location	A	B	C=B-A	Consumer ID No./ Meter No.	D	E	F=E-D	G=C-∑F	% of LT Loss w.r.t Input Energy
							Initial Meter Reading at LT side of DTR (LU)	Final Meter Reading at LT side of DTR (LU)	Energy Consumption at destination end during interval in LU		Initial Meter Reading at Consumer side (U)	Final Meter Reading at Consumer side (U)	Energy Consumption at destination end during interval in Unit	LT Line Loss in LU	
84										R43149C			42		
85										R44086			12		
87										R44093C			13		
88										R44301C			55		
89										R44302C			49		
91										R44304C			2		
92										R44305C			6		
93										R44307C			22		
94										R456A			60		
96										R46090C			95		
97										R46091C			1		
98										R47208			47		
99										R47259			92		
100										R47686			139		
101										R48379C			98		
102										R48380C			28		
103										R48381C			22		
104										R48392C			2		
105										R48393			20		
106										R48394			178		
107										R48395C			13		
112										R48400C			4		
113										R48401C			5		
115										R48403C			7		
117										R48527C			4		
118										R48528C			2		
120										R48532C			15		
121										R48533C			21		
123										R51246			128		
126										R533A			120		
127										R5462C			22		
128										R54837C			59		
129										R54838C			16		
130										R5512C			135		
131										R57387C			122		
132										R57388A			48		
133										R57389A			318		
134										R57390A			173		
135										R57662C			219		
136										R6536			148		

Sl.No.	Name of Division	Name of PSS	Voltage Level	Name of Outgoing 11 kV Feeder	Distribution Transformer Capacity in KVA/ 11 kV Bulk Consumer	Distribution Transformer Location Code/ Bulk Consumer Location	A Initial Meter Reading at LT side of DTR (LU)	B Final Meter Reading at LT side of DTR (LU)	C=B-A Energy Consumption at destination end during interval in LU	Consumer ID No./ Meter No.	D Initial Meter Reading at Consumer side (U)	E Final Meter Reading at Consumer side (U)	F=E-D Energy Consumption at destination end during interval in Unit	G=C-∑F LT Line Loss in LU	% of LT Loss w.r.t Input Energy
137										R709A			121		
138										R781A			156		
139										R8100A			117		
140										R8815A			152		
141										R911			115		
142										R912C			29		
143										R92404			141		
144										R92701			115		
146										R9613A			177		
147										R9765A			247		
148										R9787A			193		
149										RCSTL18			659		
150										RMP1955			789		
151										RMP3239			348		
SUB-TOTAL (1)									**0.154**				**12269**	**0.03**	**20.43**
1	**HUBLI**	PH	110/11KV	A-TRUNK	250	BELLARY GALLI TC	3.342	3.998	0.656	332635C			25	0.126	19.235
2										332636C			3		
3										332637C			15		
4										R10022A			260		
5										R10094A			6		
6										R1009A			81		
7										R10325A			958		
8										R10326A			150		
9										R10327A			144		
10										R10328A			168		
11										R10329A			47		
12										R10330A			241		
13										R10331A			588		
14										R10332A			598		
15										R10375A			138		
16										R10376A			225		
17										R10377A			100		
18										R10378A			112		
19										R10814C			736		
20										R10826A			686		
21										R10916A			31		
22										R10917A			25		
23										R1124			61		
24										R11275A			101		

Sl.No.	Name of Division	Name of PSS	Voltage Level	Name of Outgoing 11 kV Feeder	Distribution Transformer Capacity in KVA/ 11 kV Bulk Consumer	Distribution Transformer Location Code/ Bulk Consumer Location	A	B	C=B-A	Consumer ID No./ Meter No.	D	E	F=E-D	G=C-∑F	% of LT Loss w.r.t Input Energy
							Initial Meter Reading at LT side of DTR (LU)	Final Meter Reading at LT side of DTR (LU)	Energy Consumption at destination end during interval in LU		Initial Meter Reading at Consumer side (U)	Final Meter Reading at Consumer side (U)	Energy Consumption at destination end during interval in Unit	LT Line Loss in LU	
25										R11276A			37		
26										R11277A			13		
27										R1203			1136		
28										R12047A			54		
29										R12070A			151		
30										R1211			879		
31										R1213C			78		
32										R1217			556		
33										R12252A			3		
34										R12554C			294		
35										R12555C			59		
36										R12575A			258		
37										R12576A			50		
38										R12607C			1024		
39										R13188C			8		
40										R1340A			152		
41										R13724			82		
42										R13729			204		
43										R1400C			54		
44										R14116			2359		
45										R1450A			7		
46										R14880			95		
47										R14882			34		
48										R1499C			31		
49										R15119			36		
51										R15756			17		
52										R15832			153		
53										R15927			296		
54										R15989			93		
55										R16309			57		
56										R16418			31		
57										R16570C			28		
58										R165A			103		
59										R16726			8		
60										R18422			13		
61										R18423			25		
64										R1845			68		
65										R18516			96		
66										R18997			1005		
67										R19559			198		

Sl.No.	Name of Division	Name of PSS	Voltage Level	Name of Outgoing 11 kV Feeder	Distribution Transformer Capacity in KVA/ 11 kV Bulk Consumer	Distribution Transformer Location Code/ Bulk Consumer Location	A	B	C=B-A	Consumer ID No./ Meter No.	D	E	F=E-D	G=C-∑F	% of LT Loss w.r.t Input Energy
							Initial Meter Reading at LT side of DTR (LU)	Final Meter Reading at LT side of DTR (LU)	Energy Consumption at destination end during interval in LU		Initial Meter Reading at Consumer side (U)	Final Meter Reading at Consumer side (U)	Energy Consumption at destination end during interval in Unit	LT Line Loss in LU	
68										R197A			92		
69										R2002A			146		
70										R22895C			17		
71										R23581C			37		
72										R2445A			61		
73										R25276			42		
74										R2536C			149		
75										R300038			48		
76										R30046			80		
77										R30050C			60		
78										R30135			24		
79										R301368C			0		
80										R301369C			1740		
81										R301370C			33		
82										R303101C			9		
83										R303102C			2843		
84										R303103C			502		
85										R303104C			102		
86										R303223C			3		
87										R30331			133		
88										R30403			122		
89										R304136			55		
90										R30487C			11		
91										R30506C			16		
92										R305495			65		
94										R305497C			5		
95										R306082A			107		
96										R306083A			218		
97										R306084A			104		
98										R306085A			149		
99										R306086C			342		
100										R306087C			61		
101										R306088A			236		
103										R30778C			10		
104										R30787			17		
105										R309227C			71		
106										R30973C			2883		
107										R311577C			5		
108										R311578C			16		
109										R311579C			1		

Sl.No.	Name of Division	Name of PSS	Voltage Level	Name of Outgoing 11 kV Feeder	Distribution Transformer Capacity in KVA/ 11 kV Bulk Consumer	Distribution Transformer Location Code/ Bulk Consumer Location	A	B	C=B-A	Consumer ID No./ Meter No.	D	E	F=E-D	G=C-∑F	% of LT Loss w.r.t Input Energy
							Initial Meter Reading at LT side of DTR (LU)	Final Meter Reading at LT side of DTR (LU)	Energy Consumption at destination end during interval in LU		Initial Meter Reading at Consumer side (U)	Final Meter Reading at Consumer side (U)	Energy Consumption at destination end during interval in Unit	LT Line Loss in LU	
110										R311601C			4		
112										R311603C			2		
113										R311701A			82		
114										R311702A			30		
115										R311703C			36		
116										R311704C			1		
118										R3117A			2118		
119										R313213			2232		
120										R313739			83		
121										R313964C			100		
122										R313965C			23		
123										R314007C			1		
124										R314008C			3		
125										R3147C			75		
126										R315203			1		
127										R315204			15		
128										R315205			3		
130										R315207			5		
132										R315643C			44		
133										R315699			100		
134										R315948			239		
135										R315949			137		
136										R315950			20		
137										R315951			51		
139										R316128A			302		
140										R316129A			28		
141										R316130C			100		
142										R316593A			463		
143										R316594C			49		
144										R316595C			26		
145										R316596C			12		
146										R316597			47		
147										R316621			48		
148										R316756			114		
149										R317027			334		
151										R317029C			281		
152										R31812C			6		
153										R318205C			44		
154										R318206C			29		
155										R320138			7		

Sl.No.	Name of Division	Name of PSS	Voltage Level	Name of Outgoing 11 kV Feeder	Distribution Transformer Capacity in KVA/ 11 kV Bulk Consumer	Distribution Transformer Location Code/ Bulk Consumer Location	A	B	C=B-A	Consumer ID No./ Meter No.	D	E	F=E-D	G=C-∑F	% of LT Loss w.r.t Input Energy
							Initial Meter Reading at LT side of DTR (LU)	Final Meter Reading at LT side of DTR (LU)	Energy Consumption at destination end during interval in LU		Initial Meter Reading at Consumer side (U)	Final Meter Reading at Consumer side (U)	Energy Consumption at destination end during interval in Unit	LT Line Loss in LU	
156										R320289			33		
157										R320338			25		
158										R32227			17		
159										R3223A			162		
160										R323741			6		
161										R324353C			57		
162										R324354C			2		
163										R324355C			1		
164										R32456			137		
165										R325067A			144		
166										R325369C			20		
167										R325371			113		
168										R325372C			5		
169										R325767A			3		
170										R325768A			345		
171										R325769A			290		
172										R325770A			206		
173										R325771A			200		
174										R325772A			77		
175										R325773A			121		
176										R325774A			277		
177										R325775A			257		
178										R325776A			182		
179										R325777A			271		
180										R325778A			293		
181										R325779C			8		
183										R325781C			6		
184										R325782C			1		
185										R325783C			106		
186										R325784C			7		
187										R325785C			9		
189										R325787C			1		
190										R325788C			21		
192										R325790C			1		
194										R325792A			500		
195										R326053C			40		
196										R326523C			17		
197										R327645			61		
198										R329043C			140		
199										R329044A			358		

Sl.No.	Name of Division	Name of PSS	Voltage Level	Name of Outgoing 11 kV Feeder	Distribution Transformer Capacity in KVA/ 11 kV Bulk Consumer	Distribution Transformer Location Code/ Bulk Consumer Location	A	B	C=B-A	Consumer ID No./ Meter No.	D	E	F=E-D	G=C-∑F	% of LT Loss w.r.t Input Energy
							Initial Meter Reading at LT side of DTR (LU)	Final Meter Reading at LT side of DTR (LU)	Energy Consumption at destination end during interval in LU		Initial Meter Reading at Consumer side (U)	Final Meter Reading at Consumer side (U)	Energy Consumption at destination end during interval in Unit	LT Line Loss in LU	
200										R329360A			29		
201										R329473C			246		
202										R331175C			33		
203										R331176C			25		
204										R331177C			16		
206										R33137C			3		
207										R33138C			10		
208										R33139C			12		
209										R33140C			58		
210										R33141C			12		
211										R33143C			17		
212										R33147C			2		
213										R33148C			14		
214										R33149C			11		
215										R331508			64		
216										R331509			30		
217										R33150C			3		
218										R33151C			28		
219										R331926C			1		
220										R34388			66		
221										R34641			9		
222										R34955C			119		
223										R35073C			34		
224										R3513C			94		
225										R35515			141		
226										R36014			37		
227										R36103			19		
228										R36104			57		
229										R36132C			24		
230										R36142			158		
231										R36156			237		
232										R3634C			20		
233										R3645A			118		
234										R3659A			87		
235										R36806C			9		
236										R36993C			38		
237										R36994C			8		
238										R3729C			66		
239										R374A			279		
241										R38290C			10		

Sl.No.	Name of Division	Name of PSS	Voltage Level	Name of Outgoing 11 kV Feeder	Distribution Transformer Capacity in KVA/ 11 kV Bulk Consumer	Distribution Transformer Location Code/ Bulk Consumer Location	A	B	C=B-A	Consumer ID No./ Meter No.	D	E	F=E-D	G=C-∑F	% of LT Loss w.r.t Input Energy
							Initial Meter Reading at LT side of DTR (LU)	Final Meter Reading at LT side of DTR (LU)	Energy Consumption at destination end during interval in LU		Initial Meter Reading at Consumer side (U)	Final Meter Reading at Consumer side (U)	Energy Consumption at destination end during interval in Unit	LT Line Loss in LU	
242										R38291C			221		
243										R38292C			53		
244										R3890A			72		
245										R38954C			49		
246										R391C			60		
247										R39567C			44		
248										R39625C			1482		
251										R40162			50		
252										R40248C			115		
253										R40824C			4		
254										R4094C			12		
255										R41760			73		
256										R42414			8		
258										R425C			62		
259										R4329			48		
264										R44424C			5		
265										R44425C			30		
266										R44426C			9		
268										R44701			32		
269										R4492C			12		
270										R45522			199		
271										R46110C			33		
272										R46111C			97		
273										R46112C			4		
274										R46113C			1		
275										R46802C			28		
276										R46818C			17		
277										R47866			1		
278										R48514C			46		
279										R48515C			32		
280										R48516C			144		
281										R48517C			69		
283										R48519C			94		
284										R48521C			10		
285										R48522C			8		
286										R50172C			29		
287										R50366			33		
288										R5123C			4		
290										R51275C			12		
291										R51484C			2		

Sl.No.	Name of Division	Name of PSS	Voltage Level	Name of Outgoing 11 kV Feeder	Distribution Transformer Capacity in KVA/ 11 kV Bulk Consumer	Distribution Transformer Location Code/ Bulk Consumer Location	A	B	C=B-A	Consumer ID No./ Meter No.	D	E	F=E-D	G=C-∑F	% of LT Loss w.r.t Input Energy
							Initial Meter Reading at LT side of DTR (LU)	Final Meter Reading at LT side of DTR (LU)	Energy Consumption at destination end during interval in LU		Initial Meter Reading at Consumer side (U)	Final Meter Reading at Consumer side (U)	Energy Consumption at destination end during interval in Unit	LT Line Loss in LU	
293										R51582C			38		
294										R51666C			10		
295										R51667C			7		
296										R51702C			15		
297										R53941A			141		
298										R53942A			146		
299										R53943A			127		
300										R53944A			211		
302										R53946A			151		
303										R53947A			395		
304										R53948A			117		
306										R53950A			46		
307										R54290			23		
308										R54872A			199		
309										R54873A			58		
310										R54874A			296		
312										R55811C			62		
313										R55812C			2		
315										R55814C			4		
318										R55817			14		
319										R55827C			14		
320										R55859C			34		
321										R56530C			7		
322										R56545C			1		
323										R56546C			3		
324										R56547C			6		
325										R56549C			37		
326										R56550C			14		
327										R5675C			202		
329										R56803C			1		
330										R56804C			38		
334										R56811C			1		
336										R58082C			1		
337										R58083C			54		
338										R58084C			7		
339										R599C			14		
340										R6438C			51		
341										R658A			147		
342										R6659C			532		
343										R698			26		

Sl.No.	Name of Division	Name of PSS	Voltage Level	Name of Outgoing 11 kV Feeder	Distribution Transformer Capacity in KVA/ 11 kV Bulk Consumer	Distribution Transformer Location Code/ Bulk Consumer Location	A	B	C=B-A	Consumer ID No./ Meter No.	D	E	F=E-D	G=C-∑F	% of LT Loss w.r.t Input Energy
							Initial Meter Reading at LT side of DTR (LU)	Final Meter Reading at LT side of DTR (LU)	Energy Consumption at destination end during interval in LU		Initial Meter Reading at Consumer side (U)	Final Meter Reading at Consumer side (U)	Energy Consumption at destination end during interval in Unit	LT Line Loss in LU	
344										R715			37		
345										R8015A			167		
346										R8055A			29		
347										R8087A			138		
348										R8520A			183		
349										R8641A			101		
350										R8642A			217		
351										R8643A			98		
352										R8644A			2		
353										R8741			20		
354										R8742			81		
355										R877C			495		
356										R878C			129		
357										R8879			21		
358										R8930A			1		
359										R8980A			184		
362										R90365			74		
363										R90366A			56		
364										R90367C			11		
365										R90368A			5		
367										R9206C			22		
368										R92181C			192		
369										R92345C			23		
370										R92346C			9		
373										R9449A			453		
374										R95577			70		
375										R95578			69		
376										R963C			220		
377										R975C			2		
378										RCSTL69			229		
379										RCSTL70			518		
380										RMP2580			843		
381										RMP2916			36		
382										RMP3263			156		
383										RMP751			5		
385										RMP963			1130		
386										RMP980			382		
SUB-TOTAL (2)									**0.656**				**52982**	**0.13**	**19.23**

Sl.No.	Name of Division	Name of PSS	Voltage Level	Name of Outgoing 11 kV Feeder	Distribution Transformer Capacity in KVA/ 11 kV Bulk Consumer	Distribution Transformer Location Code/ Bulk Consumer Location	A	B	C=B-A	Consumer ID No./ Meter No.	D	E	F=E-D	G=C-∑F	% of LT Loss w.r.t Input Energy
							Initial Meter Reading at LT side of DTR (LU)	Final Meter Reading at LT side of DTR (LU)	Energy Consumption at destination end during interval in LU		Initial Meter Reading at Consumer side (U)	Final Meter Reading at Consumer side (U)	Energy Consumption at destination end during interval in Unit	LT Line Loss in LU	
1	**HUBLI**	BINDAL	220/11KV	S.G. NAGAR	63	K.K. Nagar TC	1.974	2.110	0.136	10304A			80	0.023	16.853
2										205403			60		
3										209737C			13		
4										211924			31		
5										213295C			83		
6										214721			15		
7										221293			81		
8										221305			42		
9										221311			37		
10										221430			31		
11										221532			28		
12										221667			20		
13										221668			20		
14										221679			48		
15										31589			21		
16										332649			29		
17										332655			28		
18										332771			51		
19										38716			19		
20										38717			55		
21										39578			37		
22										41187C			65		
23										47167C			9		
24										50943C			27		
25										50958C			12		
26										R300567			124		
27										R300569			34		
28										R300570			85		
29										R300571			33		
30										R300577			13		
31										R300578			53		
32										R300579			53		
33										R300580			70		
34										R300581			75		
35										R300583			30		
36										R300584			8		
37										R300585			11		
38										R300587			48		
39										R300588			72		

Sl.No.	Name of Division	Name of PSS	Voltage Level	Name of Outgoing 11 kV Feeder	Distribution Transformer Capacity in KVA/ 11 kV Bulk Consumer	Distribution Transformer Location Code/ Bulk Consumer Location	A	B	C=B-A	Consumer ID No./ Meter No.	D	E	F=E-D	G=C-∑F	% of LT Loss w.r.t Input Energy
							Initial Meter Reading at LT side of DTR (LU)	Final Meter Reading at LT side of DTR (LU)	Energy Consumption at destination end during interval in LU		Initial Meter Reading at Consumer side (U)	Final Meter Reading at Consumer side (U)	Energy Consumption at destination end during interval in Unit	LT Line Loss in LU	
40										R300589			54		
41										R300590			48		
42										R300591			52		
43										R300592			52		
44										R300594			37		
45										R300596			35		
46										R300598			30		
47										R300600			53		
48										R301901			80		
49										R301902			67		
50										R301903			57		
51										R301906			112		
52										R301907			43		
53										R301908			54		
54										R301909			74		
55										R301917			14		
56										R301930			37		
57										R301932			12		
58										R301934			91		
59										R301935			111		
60										R301936			43		
61										R301972			38		
62										R302653			91		
63										R305131			64		
64										R313839			103		
65										R314128			66		
66										R314129			67		
67										R314371			44		
68										R314372			60		
69										R314576			32		
70										R314577			8		
71										R314589			163		
72										R314731			18		
73										R314744			11		
74										R314745			61		
75										R314847			79		
76										R315054			47		
77										R315132			72		
78										R315202			21		

Sl.No.	Name of Division	Name of PSS	Voltage Level	Name of Outgoing 11 kV Feeder	Distribution Transformer Capacity in KVA/ 11 kV Bulk Consumer	Distribution Transformer Location Code/ Bulk Consumer Location	A	B	C=B-A	Consumer ID No./ Meter No.	D	E	F=E-D	G=C-∑F	% of LT Loss w.r.t Input Energy
							Initial Meter Reading at LT side of DTR (LU)	Final Meter Reading at LT side of DTR (LU)	Energy Consumption at destination end during interval in LU		Initial Meter Reading at Consumer side (U)	Final Meter Reading at Consumer side (U)	Energy Consumption at destination end during interval in Unit	LT Line Loss in LU	
79										R315346			72		
80										R315434			24		
81										R315438			51		
82										R315507			52		
83										R315508			32		
84										R315615			20		
85										R315640			60		
86										R315837			56		
87										R315910			46		
88										R315979			102		
89										R316124			40		
90										R316266			43		
91										R316366			55		
92										R316511			45		
93										R316512			33		
94										R316598			42		
95										R316599			34		
96										R316791			123		
97										R316823			20		
98										R316972			82		
99										R317022			67		
100										R317136			50		
101										R317186			53		
102										R317213			64		
103										R317299			62		
104										R317565			46		
105										R317733			63		
106										R317867			94		
107										R317868			17		
108										R318201			114		
109										R318313			25		
110										R318654			79		
111										R318664			87		
112										R318665			41		
113										R320094			23		
114										R320095			44		
115										R320417			28		
116										R320480			81		
117										R320490			53		

Sl.No.	Name of Division	Name of PSS	Voltage Level	Name of Outgoing 11 kV Feeder	Distribution Transformer Capacity in KVA/ 11 kV Bulk Consumer	Distribution Transformer Location Code/ Bulk Consumer Location	A	B	C=B-A	Consumer ID No./ Meter No.	D	E	F=E-D	G=C-∑F	% of LT Loss w.r.t Input Energy
							Initial Meter Reading at LT side of DTR (LU)	Final Meter Reading at LT side of DTR (LU)	Energy Consumption at destination end during interval in LU		Initial Meter Reading at Consumer side (U)	Final Meter Reading at Consumer side (U)	Energy Consumption at destination end during interval in Unit	LT Line Loss in LU	
118										R323675			61		
119										R323760			46		
120										R323787			42		
121										R323832			122		
122										R323833			112		
123										R324206			37		
124										R324208			5		
125										R324291			65		
126										R324487			59		
127										R324709			51		
128										R324752			50		
129										R324904			37		
130										R324905			66		
131										R324967			119		
132										R324968			49		
133										R324969			47		
134										R325141			52		
135										R325475			20		
136										R325684			75		
137										R325686			0		
138										R325687			91		
139										R325723			24		
140										R325724			42		
141										R325878			69		
142										R326058			36		
143										R326060			33		
144										R326081			131		
145										R326193			70		
146										R326248			46		
147										R326322			46		
148										R326323			94		
149										R326324			34		
150										R326406			25		
151										R326407			63		
152										R326408			60		
153										R326455			44		
154										R326572			39		
155										R327013			41		
156										R327019			74		

Sl.No.	Name of Division	Name of PSS	Voltage Level	Name of Outgoing 11 kV Feeder	Distribution Transformer Capacity in KVA/ 11 kV Bulk Consumer	Distribution Transformer Location Code/ Bulk Consumer Location	A	B	C=B-A	Consumer ID No./ Meter No.	D	E	F=E-D	G=C-∑F	% of LT Loss w.r.t Input Energy
							Initial Meter Reading at LT side of DTR (LU)	Final Meter Reading at LT side of DTR (LU)	Energy Consumption at destination end during interval in LU		Initial Meter Reading at Consumer side (U)	Final Meter Reading at Consumer side (U)	Energy Consumption at destination end during interval in Unit	LT Line Loss in LU	
157										R327020			63		
158										R327220			41		
159										R327343			16		
160										R327927			90		
161										R327928			11		
162										R327929			40		
163										R327930			35		
164										R327931			2		
165										R327941			44		
166										R328004			87		
167										R328006			26		
168										R328189D			38		
169										R328190D			45		
170										R328198			14		
171										R328257C			28		
172										R328328			12		
173										R328338			40		
174										R328381			77		
175										R328453			48		
176										R328582			55		
177										R328720			54		
178										R328726			50		
179										R328771			56		
180										R328772			12		
181										R328911			71		
182										R328967			44		
183										R328975			80		
185										R329214			35		
186										R329248			77		
187										R329250			13		
188										R329257			22		
189										R329258			43		
190										R329259			44		
191										R329615			28		
192										R329621			30		
193										R329622			49		
194										R329723			33		
195										R329747			87		
196										R329751			55		
197										R330166			38		

Sl.No.	Name of Division	Name of PSS	Voltage Level	Name of Outgoing 11 kV Feeder	Distribution Transformer Capacity in KVA/ 11 kV Bulk Consumer	Distribution Transformer Location Code/ Bulk Consumer Location	A	B	C=B-A	Consumer ID No./ Meter No.	D	E	F=E-D	G=C-∑F	% of LT Loss w.r.t Input Energy
							Initial Meter Reading at LT side of DTR (LU)	Final Meter Reading at LT side of DTR (LU)	Energy Consumption at destination end during interval in LU		Initial Meter Reading at Consumer side (U)	Final Meter Reading at Consumer side (U)	Energy Consumption at destination end during interval in Unit	LT Line Loss in LU	
198										R330356			39		
199										R330608			10		
200										R330729			33		
201										R330775			34		
202										R330983			24		
203										R331184			51		
204										R331277			88		
205										R331421			66		
206										R331435			60		
207										R331436			50		
208										R331511			48		
209										R331657			52		
210										R331920			20		
211										R332065			35		
212										R332303			60		
213										R332313			24		
214										R332493			48		
215										R332516			81		
216										R51685			75		
217										R57404			89		
218										R95010			65		
219										R95011			73		
220										R95036			66		
221										R95037			52		
222										R95038			57		
223										R95039			80		
224										RCSTL132			43		
SUB-TOTAL (3)									**0.136**				**11308**	**0.02**	**16.85**
1	**HUBLI**	BINDAL	220/11KV	BIDNAL	250	Bidnal Village TC	0.419	0.654	0.235	20138			12	0.045	19.298
2										220610			1		
3										221310			27		
4										332647			23		
5										332648			85		
7										332770			47		
8										332907			48		
9										332908			28		
10										332909			65		
11										MP332923			45		
12										R10320A			35		

Sl.No.	Name of Division	Name of PSS	Voltage Level	Name of Outgoing 11 kV Feeder	Distribution Transformer Capacity in KVA/ 11 kV Bulk Consumer	Distribution Transformer Location Code/ Bulk Consumer Location	A	B	C=B-A	Consumer ID No./ Meter No.	D	E	F=E-D	G=C-∑F	% of LT Loss w.r.t Input Energy
							Initial Meter Reading at LT side of DTR (LU)	Final Meter Reading at LT side of DTR (LU)	Energy Consumption at destination end during interval in LU		Initial Meter Reading at Consumer side (U)	Final Meter Reading at Consumer side (U)	Energy Consumption at destination end during interval in Unit	LT Line Loss in LU	
13										R11635A			22		
14										R12025			21		
15										R12079			24		
16										R12146A			35		
17										R13416			46		
18										R14108			75		
19										R15217			5		
20										R15220			60		
22										R16714			13		
23										R17047			57		
24										R17979			53		
25										R19226			80		
26										R1C			3		
27										R20273			42		
28										R20946			61		
29										R2924			32		
30										R2980			27		
31										R2990			63		
32										R3			47		
33										R300003			23		
34										R300005			29		
35										R300006			21		
36										R300007			48		
37										R300008			18		
38										R301958			73		
39										R301960			30		
40										R301961			60		
41										R301964			37		
42										R301965			68		
43										R301966C			12		
44										R301967			22		
45										R301968			51		
46										R301969C			10		
47										R301978			64		
48										R302624C			21		
50										R303976C			2		
51										R304567			12		
52										R304568			36		
53										R304615C			134		
54										R305247			62		

Sl.No.	Name of Division	Name of PSS	Voltage Level	Name of Outgoing 11 kV Feeder	Distribution Transformer Capacity in KVA/ 11 kV Bulk Consumer	Distribution Transformer Location Code/ Bulk Consumer Location	A	B	C=B-A	Consumer ID No./ Meter No.	D	E	F=E-D	G=C-∑F	% of LT Loss w.r.t Input Energy
							Initial Meter Reading at LT side of DTR (LU)	Final Meter Reading at LT side of DTR (LU)	Energy Consumption at destination end during interval in LU		Initial Meter Reading at Consumer side (U)	Final Meter Reading at Consumer side (U)	Energy Consumption at destination end during interval in Unit	LT Line Loss in LU	
55										R305248			35		
56										R305371			40		
57										R305488C			134		
58										R305489			18		
59										R3069			179		
60										R306978			65		
61										R306979			27		
62										R306980			69		
64										R309223			26		
65										R309224			45		
66										R311651			34		
67										R311661			32		
68										R311662			36		
69										R311663			99		
70										R311851A			80		
71										R312932			35		
72										R312985			14		
73										R312992			22		
74										R312993			54		
75										R313110			24		
76										R313299C			20		
78										R313541			22		
79										R313542			23		
80										R313543			15		
81										R313544			83		
83										R313696			38		
84										R313697			32		
85										R313698			41		
86										R313743			65		
87										R313744			55		
88										R313959			81		
89										R314313			70		
90										R314506C			52		
91										R314899			19		
92										R31504			99		
93										R31505			56		
94										R315051			45		
95										R315066			7		
96										R315067			76		
97										R315068			64		

Sl.No.	Name of Division	Name of PSS	Voltage Level	Name of Outgoing 11 kV Feeder	Distribution Transformer Capacity in KVA/ 11 kV Bulk Consumer	Distribution Transformer Location Code/ Bulk Consumer Location	A	B	C=B-A	Consumer ID No./ Meter No.	D	E	F=E-D	G=C-∑F	% of LT Loss w.r.t Input Energy
							Initial Meter Reading at LT side of DTR (LU)	Final Meter Reading at LT side of DTR (LU)	Energy Consumption at destination end during interval in LU		Initial Meter Reading at Consumer side (U)	Final Meter Reading at Consumer side (U)	Energy Consumption at destination end during interval in Unit	LT Line Loss in LU	
98										R315343			132		
99										R315345			69		
100										R315618			4		
101										R316358C			34		
102										R316963			47		
103										R317024			35		
104										R317171			98		
105										R317291			78		
106										R317398A			64		
107										R317819			169		
108										R317820			43		
109										R318027			23		
110										R318199			104		
111										R318208			21		
112										R318209			45		
113										R318662			98		
114										R318663			31		
115										R318934			54		
116										R318935			36		
117										R318936			67		
118										R320081			38		
119										R320349			75		
120										R323585C			100		
121										R323953			75		
122										R324190			55		
123										R324471			61		
124										R324472			31		
125										R324768C			12		
126										R325186C			105		
127										R325187			24		
128										R325188			52		
129										R325189			27		
130										R325365			26		
132										R325367			27		
133										R325370			110		
134										R325794			45		
136										R325925			28		
137										R326027			56		
138										R326325			91		
139										R326562			38		

Sl.No.	Name of Division	Name of PSS	Voltage Level	Name of Outgoing 11 kV Feeder	Distribution Transformer Capacity in KVA/ 11 kV Bulk Consumer	Distribution Transformer Location Code/ Bulk Consumer Location	A	B	C=B-A	Consumer ID No./ Meter No.	D	E	F=E-D	G=C-∑F	% of LT Loss w.r.t Input Energy
							Initial Meter Reading at LT side of DTR (LU)	Final Meter Reading at LT side of DTR (LU)	Energy Consumption at destination end during interval in LU		Initial Meter Reading at Consumer side (U)	Final Meter Reading at Consumer side (U)	Energy Consumption at destination end during interval in Unit	LT Line Loss in LU	
140										R326716			49		
142										R326900			29		
143										R327282			31		
144										R327283			81		
145										R327487			40		
146										R327499			5		
147										R327500			33		
148										R327501			66		
149										R327637			47		
150										R327725			36		
151										R327812			47		
152										R328055			1		
153										R328056			1		
154										R328057C			11		
155										R328058C			1		
156										R328063			30		
158										R328260			37		
159										R328441			38		
160										R329252			48		
161										R329253			1		
162										R329476			45		
163										R329624			119		
164										R329901			61		
165										R330096			21		
166										R330480			127		
167										R330614			86		
168										R330615			67		
169										R330616			21		
170										R330617C			16		
171										R330719			112		
172										R330720			49		
173										R331905			15		
174										R332315C			35		
175										R332417			64		
176										R332501			71		
177										R33572			93		
178										R34826			45		
179										R34827			19		
180										R34828			56		
181										R34829			19		

Sl.No.	Name of Division	Name of PSS	Voltage Level	Name of Outgoing 11 kV Feeder	Distribution Transformer Capacity in KVA/ 11 kV Bulk Consumer	Distribution Transformer Location Code/ Bulk Consumer Location	A	B	C=B-A	Consumer ID No./ Meter No.	D	E	F=E-D	G=C-∑F	% of LT Loss w.r.t Input Energy
							Initial Meter Reading at LT side of DTR (LU)	Final Meter Reading at LT side of DTR (LU)	Energy Consumption at destination end during interval in LU		Initial Meter Reading at Consumer side (U)	Final Meter Reading at Consumer side (U)	Energy Consumption at destination end during interval in Unit	LT Line Loss in LU	
182										R34856			28		
183										R34859			55		
184										R34860			21		
185										R34997			47		
186										R35123			17		
187										R35159			76		
188										R35160			44		
189										R35161			28		
190										R35174			124		
191										R35692			91		
192										R35743			58		
193										R35976			65		
194										R36179			29		
195										R37252			16		
196										R37855			56		
197										R3802A			84		
198										R38820			28		
199										R39702			32		
200										R4			142		
201										R40116			97		
202										R40978			6		
203										R41085			48		
204										R41232			26		
205										R41412			86		
206										R41635			124		
207										R41889			11		
208										R42107			23		
209										R42128			51		
210										R42393			64		
211										R42395			19		
212										R42396			76		
213										R42512			120		
214										R42513			114		
215										R42628			18		
216										R42629			40		
217										R42630			103		
218										R42631			75		
219										R42839			44		
220										R43093			63		
221										R43094			113		

Sl.No.	Name of Division	Name of PSS	Voltage Level	Name of Outgoing 11 kV Feeder	Distribution Transformer Capacity in KVA/ 11 kV Bulk Consumer	Distribution Transformer Location Code/ Bulk Consumer Location	A	B	C=B-A	Consumer ID No./ Meter No.	D	E	F=E-D	G=C-∑F	% of LT Loss w.r.t Input Energy
							Initial Meter Reading at LT side of DTR (LU)	Final Meter Reading at LT side of DTR (LU)	Energy Consumption at destination end during interval in LU		Initial Meter Reading at Consumer side (U)	Final Meter Reading at Consumer side (U)	Energy Consumption at destination end during interval in Unit	LT Line Loss in LU	
222										R43179			114		
223										R43180			32		
224										R43181			29		
225										R43229			95		
226										R43230			41		
227										R43291			33		
228										R43696			124		
229										R43755			83		
230										R43756			54		
231										R43828			33		
232										R43829			29		
233										R43991			29		
234										R43996			43		
235										R44020			51		
236										R44044			41		
237										R44045			63		
238										R44155			43		
239										R44197			192		
240										R44348			39		
241										R44349			26		
242										R44350			28		
243										R44351			83		
244										R44367			44		
245										R44391			31		
246										R44393			26		
247										R44394			20		
248										R44433			78		
249										R44434			50		
250										R44515			100		
251										R45201			22		
252										R45245			249		
253										R45263			101		
254										R45682			129		
255										R45683			220		
256										R45842			36		
257										R46121			178		
258										R46636			59		
259										R46637			15		
260										R46638C			7		
261										R46639C			1		

Sl.No.	Name of Division	Name of PSS	Voltage Level	Name of Outgoing 11 kV Feeder	Distribution Transformer Capacity in KVA/ 11 kV Bulk Consumer	Distribution Transformer Location Code/ Bulk Consumer Location	A	B	C=B-A	Consumer ID No./ Meter No.	D	E	F=E-D	G=C-∑F	% of LT Loss w.r.t Input Energy
							Initial Meter Reading at LT side of DTR (LU)	Final Meter Reading at LT side of DTR (LU)	Energy Consumption at destination end during interval in LU		Initial Meter Reading at Consumer side (U)	Final Meter Reading at Consumer side (U)	Energy Consumption at destination end during interval in Unit	LT Line Loss in LU	
262										R46640C			48		
263										R47094			55		
264										R47240			67		
265										R47651			58		
266										R47684			144		
267										R47685			20		
268										R47700			27		
269										R47707			36		
270										R48140			56		
271										R48210			44		
272										R48391			37		
273										R48555			105		
274										R48942			11		
275										R48943			47		
276										R48981			76		
277										R48982			32		
278										R4985			82		
279										R50632			67		
280										R50674			64		
281										R50764C			44		
282										R50869			44		
283										R50872			45		
284										R51122			49		
285										R51123			33		
286										R51124			6		
287										R51125			12		
288										R51130			28		
289										R51131			101		
290										R51273			33		
291										R51276			205		
292										R51508			37		
293										R51524			46		
294										R51527			44		
295										R51915			47		
296										R51945			8		
297										R52963			29		
298										R52976			182		
299										R52985			30		
300										R53201			5		
301										R53202			51		

Sl.No.	Name of Division	Name of PSS	Voltage Level	Name of Outgoing 11 kV Feeder	Distribution Transformer Capacity in KVA/ 11 kV Bulk Consumer	Distribution Transformer Location Code/ Bulk Consumer Location	A	B	C=B-A	Consumer ID No./ Meter No.	D	E	F=E-D	G=C-∑F	% of LT Loss w.r.t Input Energy
							Initial Meter Reading at LT side of DTR (LU)	Final Meter Reading at LT side of DTR (LU)	Energy Consumption at destination end during interval in LU		Initial Meter Reading at Consumer side (U)	Final Meter Reading at Consumer side (U)	Energy Consumption at destination end during interval in Unit	LT Line Loss in LU	
302										R53203			43		
303										R53573			84		
304										R53574			62		
305										R53599			94		
306										R53907			7		
307										R53908			18		
308										R55826			3		
309										R57055			15		
310										R57397			52		
311										R57407			43		
312										R57667			9		
314										R57703			28		
315										R57704			44		
316										R58155			132		
317										R6139			93		
318										R6276			8		
319										R6615			52		
320										R9015A			169		
321										R90278			86		
322										R91251			49		
323										R91252C			33		
324										R91302			48		
325										R91718			29		
326										R91817A			175		
327										R91887			48		
328										R91888			27		
329										R91889			7		
330										R9273			78		
331										R9277A			153		
332										R9278A			43		
333										R93306			116		
334										R93362			116		
335										R93363			71		
336										R93364			56		
337										R95003			73		
338										R95034			101		
339										R95035			47		
340										R95054			36		
341										R95521			36		
342										R95522			52		

Sl.No.	Name of Division	Name of PSS	Voltage Level	Name of Outgoing 11 kV Feeder	Distribution Transformer Capacity in KVA/ 11 kV Bulk Consumer	Distribution Transformer Location Code/ Bulk Consumer Location	A Initial Meter Reading at LT side of DTR (LU)	B Final Meter Reading at LT side of DTR (LU)	C=B-A Energy Consumption at destination end during interval in LU	Consumer ID No./ Meter No.	D Initial Meter Reading at Consumer side (U)	E Final Meter Reading at Consumer side (U)	F=E-D Energy Consumption at destination end during interval in Unit	G=C-∑F LT Line Loss in LU	% of LT Loss w.r.t Input Energy
343										R95525			37		
344										RCSTL25			120		
345										RCSTL27			85		
346										RMP2548			48		
347										RMP2783			86		
348										RMP2992			130		
349										RMP303246			82		
350										RMP311571			111		
351										RMP3151			91		
352										RMP3319			60		
353										RMP3342			80		
354										RMP3406			71		
355										RMP3462			143		
356										RMP3765			50		
SUB-TOTAL (4)									**0.235**				**18965**	**0.045**	**19.298**
1	**HUBLI**	BINDAL	220/11KV	GABBUR	100	Kampli TC	0.831	1.117	0.286	201447			20	0.051	17.748
2										36491			55		
3										37453			35		
4										44248			2011		
5										44249			33		
6										45126			50		
7										49453			3201		
8										MP59183			4165		
9										R328965C			8524		
10										RGBRMP324203			5430		
SUB-TOTAL (5)									**0.286**				**23524**	**0.051**	**17.74825175**
TOTAL [SUB-TOTAL (1) to (5)]									**1.467**				**119048**	**0.277**	**18.860**

Like above LT Feeders we assess the below LT Feeders Result

1	**GADAG**	Gajendragad	110/ 11 kV	Gajendragad	25	Vijaya Colony TC	188.8042	188.8442	0.040						
SUB-TOTAL (1)									**0.040**						
2		Gajendragad	110/ 11 kV	Gajendragad	63	Pujar TC	1.7336	1.797	0.063						
SUB-TOTAL (2)									**0.063**						

Sl.No.	Name of Division	Name of PSS	Voltage Level	Name of Outgoing 11 kV Feeder	Distribution Transformer Capacity in KVA/ 11 kV Bulk Consumer	Distribution Transformer Location Code/ Bulk Consumer Location	A Initial Meter Reading at LT side of DTR (LU)	B Final Meter Reading at LT side of DTR (LU)	C=B-A Energy Consumption at destination end during interval in LU	Consumer ID No./ Meter No.	D Initial Meter Reading at Consumer side (U)	E Final Meter Reading at Consumer side (U)	F=E-D Energy Consumption at destination end during interval in Unit	G=C-∑F LT Line Loss in LU	% of LT Loss w.r.t Input Energy
3		Naregal	110/ 11 kV	Naregal	100	Nagarkeri TC	38.0967	38.2677	0.171						
SUB-TOTAL (3)									**0.171**						
4		Naregal	110/11 KV	Naregal	250	Gadag Road TC	38.973	39.5328	0.5598						
SUB-TOTAL (4)									**0.560**						
TOTAL [Sub-Total (1) to (4)]									**0.834**					**0.157**	**18.860**
1	**DHARWAD**	USA DHARWAD	33/11 KV	11 kV Agri Feeder - F1	25	G Block-1	0.161	0.200	0.039						
SUB-TOTAL (1)									**0.039**						
2		USA DHARWAD	33/11 KV	11 kV Agri Feeder - F1	63	Kurubetta IPSET	0.461	0.519	0.058						
SUB-TOTAL (2)									**0.058**						
3		KUD	110/ 11 kV	Basaveshwara	100	Canara Bank	1.411	1.609	0.198						
SUB-TOTAL (3)									**0.198**						
4		KUD	110/ 11 kV	Basaveshwara	250	Shalmala 250	0.403	0.678	0.275						
SUB-TOTAL (4)									**0.275**						
TOTAL [Sub-Total (1) to (4)]									**0.570**					**0.107**	**18.860**
GRAND TOTAL (HUBLI, GADAG & DHARWAD DIVISION)									**2.871**					**0.542**	**18.860**
TOTAL ENERGY AT DTR SIDE OF HUBLI CIRCLE (Energy Input at 11 kV side at PSS - Energy Loss in 11 kV Feeders)									**1064.821**	**TOTAL LT+ COMMERCIAL LOSS w.r.t. DTR INPUT ENERGY IN HUBLI CIRCLE IN LU**				**200.830**	**18.860**
TOTAL INPUT ENERGY 11 kV SIDE IN HUBLI CIRCLE IN LU									**1138.094**	**TOTAL LT+ COMMERCIAL LOSS w.r.t. 11 kV SIDE INPUT ENERGY IN HUBLI CIRCLE IN LU**				**200.830**	**17.646**
TOTAL INPUT ENERGY 33KV SIDE IN HUBLI CIRCLE IN LU									**535.290**	**TOTAL LT + COMMERCIAL LOSS w.r.t. 33 kV SIDE INPUT ENERGY IN HUBLI CIRCLE IN LU**				**200.830**	**37.518**

Note : 1) Initial and Final Meter Reading Values are multiplied with Meter Multiplication Factor (MF).
2) Considering 80% of LT Feeders having Commercial Loss

LT LINE LOSS & COMMERCIAL LOSS DUE TO THEFT ASSESSMENT DETAIL OF GULBERGA CIRCLE IN KARNATAKA STATE

STUDY ON COMPONENT-WISE AT&C LOSSES ASSESSMENT FOR THE STATE OF KARNATAKA

E) LT LINE LOSS DETAIL OF GULBARGA CIRCLE

Sl. No.	Name of Division	Name of PSS	Voltage Level	Name of Outgoing 11 kV Feeder	Distribution Transformer Capacity in kVA/ 11 kV Bulk Consumer	Distribution Transformer Location Code/ Bulk Consumer Location	A	B	C = B-A		D	E	F = E-D	G=C-∑F	
							Initial Meter Reading at LT side of DTR (LU)	Final meter reading at LT side of DTR (LU)	Energy consumption at destination end during interval in LU	Consumer ID No. /Meter No.	Initial Meter Reading at Consumer side (U)	Final Meter Reading at Consumer side (U)	Energy Consumption at Destination End during Interval in Unit	LT Line Loss in LU	% of LT Loss w.r.t. Input Energy
1	GULBARGA II	110/33/11 kV	110/33/11KV	JEWARGI	63	Butnal village	4.74	4.77	0.03	JRL26564	529	557	28	0.004	12.857
										JRL26563	1297	1353	56		
										YTL26561	461	583	122		
										NL26560	439	445	6		
										HPL26559	513	523	10		
										HPL26558	910	947	37		
										MDL26557	1670	1720	50		
										ANKL26630	832	986	154		
										MTKL26550	415	433	18		
										DSGL26551	371	491	120		
										KTRL26552	2393	2523	130		
										MDL26554	900	910	10		
										GBRL26555	810	840	30		
										MDL26556	815	904	89		
										YTL26562	682	701	19		
										HPL26625	2000	2085	85		
										HPL26616	1143	1199	56		
										HPL26615	933	943	10		
										JRL25876	486	510	24		
										RGNRYRL26175	190	200	10		
										RGNRYRL26168	515	550	35		
										RGNRYRL26166	260	300	40		
										RGNRYRL26163	300	307	7		
										RGNRYRL26161	326	335	9		
										RGNRYRL26143	550	579	29		
										RGNRYRL26141	430	517	87		
										RGNRYRL26134	998	1077	79		
										RGNRYRL26128	330	365	35		
										ITL26767	580	600	20		
										BSGL26769	488	506	18		
										BSGL26770	480	504	24		
										SNL26773	481	488	7		
										SNL27206	514	534	20		
										SNL27208	43	47	4		
										SNL27207	302	355	53		
										KLKL27211	1670	1715	45		
										KLKL27212	480	500	20		
										KHL27214	949	949	0		

Sl. No.	Name of Division	Name of PSS	Voltage Level	Name of Outgoing 11 kV Feeder	Distribution Transformer Capacity in kVA/ 11 kV Bulk Consumer	Distribution Transformer Location Code/ Bulk Consumer Location	A	B	C = B-A	Consumer ID No. /Meter No.	D	E	F = E-D	G=C-∑F	% of LT Loss w.r.t. Input Energy
							Initial Meter Reading at LT side of DTR (LU)	Final meter reading at LT side of DTR (LU)	Energy consumption at destination end during interval in LU		Initial Meter Reading at Consumer side (U)	Final Meter Reading at Consumer side (U)	Energy Consumption at Destination End during Interval in Unit	LT Line Loss in LU	
										KHL27213	850	855	5		
										JRL27216	322	347	25		
										ANKL27218	293	300	7		
										KHL27219	262	263	1		
										KHL27220	183	189	6		
										ANKL26728	550	570	20		
										HULL26729	250	283	33		
										HULL26730	390	415	25		
										KLKL26732	500	520	20		
										HRNKL26731	507	520	13		
										MDL26741	1151	1215	64		
										KHL26743	662	670	8		
										YTL26756	104	113	9		
										ANKL26753	2645	2711	66		
										KTRL26738	656	676	20		
										BSGL26726	1032	1066	34		
										ITL26728	694	731	37		
										ITL26757	367	388	21		
										MDP26748	94	99	5		
										HCNL26749	675	698	23		
										HCNL26750	877	915	38		
										ANKL26752	1093	1130	37		
										MNGKL26578	883	902	19		
										NDHL27247	167	170	3		
										YLGL27249	586	606	20		
										BLBL27250	571	596	25		
										MRDGL27362	229	239	10		
										GNL26799	490	532	42		
										VRCHNL26798	1183	1313	130		
										MDKL26009	970	1072	102		
										RNRL27296	847	874	27		
										MRL27298	660	680	20		
										KTSL27299	401	412	11		
										KVL27300	1622	1701	79		
										KVL27302	675	701	26		
										MRL27303	660	680	20		
										RNRL27304	748	783	35		
										RDL26701	188	190	2		
Sub-Total 1							**4.74**	**4.77**	**0.03**				**2684**	**0.004**	**12.857**

Sl. No.	Name of Division	Name of PSS	Voltage Level	Name of Outgoing 11 kV Feeder	Distribution Transformer Capacity in kVA/ 11 kV Bulk Consumer	Distribution Transformer Location Code/ Bulk Consumer Location	A	B	C = B-A	Consumer ID No. /Meter No.	D	E	F = E-D	G=C-∑F	% of LT Loss w.r.t. Input Energy
							Initial Meter Reading at LT side of DTR (LU)	Final meter reading at LT side of DTR (LU)	Energy consumption at destination end during interval in LU		Initial Meter Reading at Consumer side (U)	Final Meter Reading at Consumer side (U)	Energy Consumption at Destination End during Interval in Unit	LT Line Loss in LU	
2	GULBARGA II	BILWARA	33/11 KV	BILWARA	100	Amarkhed Village 100 KVA	0.71	0.79	0.08	HCNL58	2438	2580	142	0.011	13.547
										HCNL60	1190	1325	135		
										HCNL62	1550	1830	280		
										HCNL63	3971	4095	124		
										HCNL64	938	1300	362		
										HCNL65	3480	3660	180		
										HCNL67	2280	2330	50		
										HCNL68	2209	2264	55		
										HCNL69	1420	1500	80		
										HCNL70	671	799	128		
										HCNL73	3430	3472	42		
										HCNL74	6375	6400	25		
										HCNL76	370	385	15		
										HCNL77	6520	6560	40		
										HCNL78	380	410	30		
										HCNL79	2600	2764	164		
										HCNL81	1550	1588	38		
										HCNL83	1840	1880	40		
										HCNL85	1057	1087	30		
										HCNL86	980	1005	25		
										HCNL87	875	1343	468		
										HCNL92	975	1000	25		
										HCNL95	1360	1391	31		
										HCNL118	4371	4375	4		
										HCNL121	1386	1404	18		
										HCNL122	1200	1226	26		
										HCNL124	2060	2120	60		
										HCNL125	2360	2420	60		
										HCNL126	2350	2420	70		
										HCNL129	2282	2300	18		
										HCNL130	1450	1480	30		
										HCNL133	2130	2210	80		
										HCNL103	815	830	15		
										HCNL105	1792	1815	23		
										HCNL116	2886	2910	24		
										HCNL134	1320	1340	20		
										HCNL135	2533	2590	57		
										HCNL136	1320	1380	60		
										HCNL137	5105	5150	45		
										HCNL4036	2880	2885	5		
										HCNL4037	1495	1525	30		
										HCNL4214	6130	6145	15		
										HCNL4222	4110	4200	90		

Sl. No.	Name of Division	Name of PSS	Voltage Level	Name of Outgoing 11 kV Feeder	Distribution Transformer Capacity in kVA/ 11 kV Bulk Consumer	Distribution Transformer Location Code/ Bulk Consumer Location	A	B	C = B-A		D	E	F = E-D	G=C-∑F	
							Initial Meter Reading at LT side of DTR (LU)	Final meter reading at LT side of DTR (LU)	Energy consumption at destination end during interval in LU	Consumer ID No. /Meter No.	Initial Meter Reading at Consumer side (U)	Final Meter Reading at Consumer side (U)	Energy Consumption at Destination End during Interval in Unit	LT Line Loss in LU	% of LT Loss w.r.t. Input Energy
										HCNL5217	4610	4640	30		
										HCNL5220	5980	6060	80		
										HCNL6666	1980	2080	100		
										HCNL75	960	980	20		
										HCNL10	1966	2007	41		
										HCNL6865	3530	3580	50		
										HCNL8994	5067	5107	40		
										HCNL9682	1555	1575	20		
										HCNL10129	2250	2300	50		
										HCNL9485	6030	6060	30		
										HCNL11931	1920	1950	30		
										HBLHT1	1146	4219	3073		
										HCNL11982	1760	1810	50		
Sub-Total 2							**0.71**	**0.79**	**0.08**				**6873**	**0.011**	**13.547**
3	GULBARGA I	V.K. SALAGAR	33/11KV	F2 V K Salgar	250	V.K.Salagar Village 250KVA DTC	0.09	0.88	0.79	VJP7	400	605	205	0.125	15.793
										VJP9	664	825	161		
										VJP44	412	445	33		
										VJP36	2300	2386	86		
										VJP37	130	150	20		
										VJP38	7874	7888	14		
										VJP54	800	829	29		
										VJP64	151	180	29		
										VJP61	122	132	10		
										VJP72	7009	7035	26		
										VJP47	1064	1140	76		
										VJP79	378	453	75		
										VJP81	164	185	21		
										VJP55	6850	6929	79		
										VJP98	150	358	208		
										VJP97	523	568	45		
										VJP99	30	176	146		
										VJP102	7331	7381	50		
										VJP7569	200	203	3		
										VJP10827	4226	4250	24		
										VJP11663	4642	4665	23		
										VJP11664	532	580	48		
										VJP20986	400	435	35		
										VJP11665	2190	2231	41		
										VJP20980	20	54	34		
										VJP20982	1301	1357	56		
										VJP20984	731	772	41		
										VJP20985	20	51	31		
										VJP20987	678	712	34		

Sl. No.	Name of Division	Name of PSS	Voltage Level	Name of Outgoing 11 kV Feeder	Distribution Transformer Capacity in kVA/ 11 kV Bulk Consumer	Distribution Transformer Location Code/ Bulk Consumer Location	A	B	C = B-A		D	E	F = E-D	G=C-∑F	
							Initial Meter Reading at LT side of DTR (LU)	Final meter reading at LT side of DTR (LU)	Energy consumption at destination end during interval in LU	Consumer ID No. /Meter No.	Initial Meter Reading at Consumer side (U)	Final Meter Reading at Consumer side (U)	Energy Consumption at Destination End during Interval in Unit	LT Line Loss in LU	% of LT Loss w.r.t. Input Energy
										VJP20989	327	350	23		
										VJP20993	40	83	43		
										VJP20994	478	507	29		
										VJP20996	581	607	26		
										VJP20995	20	72	52		
										VJP21066	926	991	65		
										VJP21074	20	92	72		
										VJP21075	156	185	29		
										VJP21025	1413	1486	73		
										VJP21040	205	212	7		
										VJP21061	732	768	36		
										VJP22035	150	156	6		
										VJP22013	6654	6732	78		
										BNH21116	566	577	11		
										NBG4	1337	1358	21		
										NBG5	242	247	5		
										NBG6	4199	4291	92		
										NBG7	765	804	39		
										NBG8	3609	3645	36		
										NBG9	2026	2044	18		
										NBG10	1034	1055	21		
										NBG11	2308	2332	24		
										NBG12	6008	6080	72		
										NBG13	7195	7292	97		
										NBG15	421	437	16		
										NBG17	3402	3445	43		
										NBG18	1928	1939	11		
										NBG20	12066	12129	63		
										NBG25	3604	3630	26		
										NBG26	226	240	14		
										NBG37	1350	1370	20		
										NBG38	6433	6552	119		
										NBG39	1422	1432	10		
										NBG43	1430	1478	48		
										NBG45	1893	1921	28		
										NBG46	1850	1907	57		
										NBG49	40	134	94		
										NBG50	5878	5967	89		
										NBG51	130	149	19		
										NBG52	1788	1800	12		
										NBG57	4355	4390	35		
										NBG59	1250	1259	9		
										NBG61	5828	5866	38		

Sl. No.	Name of Division	Name of PSS	Voltage Level	Name of Outgoing 11 kV Feeder	Distribution Transformer Capacity in kVA/ 11 kV Bulk Consumer	Distribution Transformer Location Code/ Bulk Consumer Location	A	B	C = B-A	Consumer ID No. /Meter No.	D	E	F = E-D	G=C-∑F	% of LT Loss w.r.t. Input Energy
							Initial Meter Reading at LT side of DTR (LU)	Final meter reading at LT side of DTR (LU)	Energy consumption at destination end during interval in LU		Initial Meter Reading at Consumer side (U)	Final Meter Reading at Consumer side (U)	Energy Consumption at Destination End during Interval in Unit	LT Line Loss in LU	
										NBG63	4336	4399	63		
										NBG68	4336	4406	70		
										NBG69	2155	2186	31		
										NBG81	2952	2968	16		
										NBG82	4092	4137	45		
										NBG88	1825	1853	28		
										NBG91	1547	1751	204		
										NBG93	2705	2715	10		
										NBG95	3510	3550	40		
										NBG97	3740	3743	3		
										NBG98	9185	9239	54		
										NBG108	4715	4800	85		
										NBG114	4104	4158	54		
										NBG116	4475	4499	24		
										NBG120	1004	1007	3		
										NBG121	1591	1898	307		
										NBG122	1145	2000	855		
										NBG123	961	987	26		
										NBG124	4248	4316	68		
										NBG125	9914	9951	37		
										NBG126	1758	1812	54		
										NBG127	3140	3165	25		
										NBG128	5498	5505	7		
										NBG129	4636	4712	76		
										NBG134	1436	1451	15		
										NBG150	1409	1521	112		
										NBG135	608	811	203		
										NBG151	2354	2388	34		
										NBG136	1894	1930	36		
										NBG137	2172	2191	19		
										NBG152	7284	7372	88		
										NBG154	2245	2452	207		
										NBG138	6195	6231	36		
										NBG155	1060	1146	86		
										NBG139	4835	5839	1004		
										NBG157	769	1039	270		
										NBG142	4341	4592	251		
										NBG143	2989	3339	350		
										NBG158	1641	1987	346		
										NBG144	840	1099	259		
										NBG162	780	1220	440		
										NBG163	3464	3638	174		
										KLTGSL1	2000	3100	1100		

Sl. No.	Name of Division	Name of PSS	Voltage Level	Name of Outgoing 11 kV Feeder	Distribution Transformer Capacity in kVA/ 11 kV Bulk Consumer	Distribution Transformer Location Code/ Bulk Consumer Location	A	B	C = B-A		D	E	F = E-D	G=C-∑F	
							Initial Meter Reading at LT side of DTR (LU)	Final meter reading at LT side of DTR (LU)	Energy consumption at destination end during interval in LU	Consumer ID No. /Meter No.	Initial Meter Reading at Consumer side (U)	Final Meter Reading at Consumer side (U)	Energy Consumption at Destination End during Interval in Unit	LT Line Loss in LU	% of LT Loss w.r.t. Input Energy
										GBLDSL110	500	1650	1150		
										BDNSL1	755	7050	6295		
										KLNSL1	785	6025	5240		
										KRHSL1	499	3199	2700		
										WGDGSL1	765	3505	2740		
										MRDSL1	2000	4721	2721		
										MDGSL1	1750	4450	2700		
										LMGSL1	2050	5290	3240		
										YLNSL1	1200	2820	1620		
										AGSL1	11629	15029	3400		
										MDKSL1	1700	5800	4100		
										NSL1	23000	26542	3542		
										TLRSL1	571	3811	3240		
										APCSL1	360	5060	4700		
										SRCSL1	3625	6325	2700		
										KTGSL1	108	2908	2800		
										LGTSL1	1500	4623	3123		
Sub-Total 3							**0.09**	**0.88**	**0.79**				**66635**	**0.125**	**15.793**
4	SEDAM	220/110/11KV SEDAM	20/110/11K	SIROLLI	25	GUMPA COLONY	0.667	0.672	0.005	M721	7182	7194	12	0.001	11.404
										M290	3534	3535	1		
										M772	5970	6007	37		
										M752	3588	3606	18		
										M755	5253	5269	16		
										M777	11970	12003	33		
										M728	4597	4601	4		
										M730	1468	1513	25		
										M592	6982	7013	31		
										M605	11229	11267	38		
										M554	5151	5159	8		
										M558	10162	10190	28		
										M515	5650	5678	28		
										MK609	4899	4913	14		
										M623	5881	5898	17		
										M625	5218	5223	5		
										M720	12090	12109	19		
										M349	15203	15233	30		
										M771	7952	7992	40		
	Sub-Total 4						**0.667**	**0.672**	**0.005**				**404**	**0.001**	**11.404**

Sl. No.	Name of Division	Name of PSS	Voltage Level	Name of Outgoing 11 kV Feeder	Distribution Transformer Capacity in kVA/ 11 kV Bulk Consumer	Distribution Transformer Location Code/ Bulk Consumer Location	A	B	C = B-A	Consumer ID No. /Meter No.	D	E	F = E-D	G=C-∑F	% of LT Loss w.r.t. Input Energy
							Initial Meter Reading at LT side of DTR (LU)	Final meter reading at LT side of DTR (LU)	Energy consumption at destination end during interval in LU		Initial Meter Reading at Consumer side (U)	Final Meter Reading at Consumer side (U)	Energy Consumption at Destination End during Interval in Unit	LT Line Loss in LU	
5	YADGIR	BALAICHAKRA	33/11KV	MAILAPUR-F4	63	shivaraj ip set tc	0.11	0.28	0.17	KML1085	1894	1918	24	0.023	13.533
										KML2018	1466	1570	104		
										KML1000	5315	5490	175		
										KML1863	6990	7144	154		
										KML1745	300	310	10		
										KML1960	4588	4636	48		
										KML1087	3011	3043	32		
										KML475	875	984	109		
										KML1619	1500	1575	75		
										KML469	5667	5832	165		
										KML650	3380	3430	50		
										KML1750	3561	3631	70		
										KML2016	4734	4762	28		
										KML1947	2994	3013	19		
										KML1768	7554	7558	4		
										KML1313	1161	1171	10		
										KML1019	1032	1051	19		
										KML1748	2920	2985	65		
										KML1642	2069	2080	11		
										KML2386	5770	5809	39		
										KML1971	9965	9983	18		
										KML1287	543	581	38		
										KML1339	703	722	19		
										KML1735	1282	3085	1803		
										KML2432	6132	6740	608		
										KML2012	1055	3065	2010		
										KML2053	548	581	33		
										KML548	4057	4088	31		
										KML1797	1425	1500	75		
										KML1627	3981	4789	808		
										KML1691	4855	4930	75		
										KML1980	4042	4132	90		
										KML1873	2875	2946	71		
										KML1247	321	353	32		
										KML1685	4232	4250	18		
										KML1740	13732	13850	118		
										KML1233	654	671	17		
										KML1218	1287	1291	4		
										KML1091	431	463	32		
										KML1413	258	285	27		
										KML1846	1260	1308	48		
										KML1679	5720	5780	60		
										KML1610	4846	4884	38		

Sl. No.	Name of Division	Name of PSS	Voltage Level	Name of Outgoing 11 kV Feeder	Distribution Transformer Capacity in kVA/ 11 kV Bulk Consumer	Distribution Transformer Location Code/ Bulk Consumer Location	A	B	C = B-A		D	E	F = E-D	G=C-∑F	
							Initial Meter Reading at LT side of DTR (LU)	Final meter reading at LT side of DTR (LU)	Energy consumption at destination end during interval in LU	Consumer ID No. /Meter No.	Initial Meter Reading at Consumer side (U)	Final Meter Reading at Consumer side (U)	Energy Consumption at Destination End during Interval in Unit	LT Line Loss in LU	% of LT Loss w.r.t. Input Energy
										KML2433	1729	4920	3191		
										KML1204	5892	5920	28		
										KML2382	5860	5883	23		
										KML1251	2487	2520	33		
										KML978	2578	2591	13		
										KML567	3982	3993	11		
										KML1885	3392	3427	35		
										KML1457	543	562	19		
										KML527	5434	5550	116		
										KML1893	5916	5932	16		
										KML1342	1325	1360	35		
										KML1479	2365	2373	8		
										KML1741	6000	6150	150		
										KML1030	4539	4590	51		
										KML1234	3279	3380	101		
										KML1232	1730	1853	123		
										KML1386	6272	6291	19		
										KML744	1472	1489	17		
										KML1043	7974	8083	109		
										KML1849	1970	1985	15		
										KML1031	6180	6227	47		
										KML1916	3546	3611	65		
										KML2193	2931	2954	23		
										KML1316	3184	3206	22		
										KML105	4025	4234	209		
										KML725	7632	7874	242		
										KML2192	4535	4561	26		
										KML863	1998	2223	225		
										KML2362	1355	1460	105		
										KML2468	5988	6290	302		
										KML1696	2347	2474	127		
										KML68	2848	2980	132		
										KML504	330	483	153		
										KML1107	3210	3331	121		
										KML973	3598	3704	106		
										KML1203	9250	9350	100		
										KML1244	6754	6983	229		
										KML1222	4354	4871	517		
										KML1749	5588	5729	141		
										KML75	2350	2581	231		
										KML132	2348	2479	131		
	Sub-Total 5						**0.11**	**0.28**	**0.17**				**14651**	**0.023**	**13.533**

Sl. No.	Name of Division	Name of PSS	Voltage Level	Name of Outgoing 11 kV Feeder	Distribution Transformer Capacity in kVA/ 11 kV Bulk Consumer	Distribution Transformer Location Code/ Bulk Consumer Location	A	B	C = B-A	Consumer ID No. /Meter No.	D	E	F = E-D	G=C-∑F	% of LT Loss w.r.t. Input Energy
							Initial Meter Reading at LT side of DTR (LU)	Final meter reading at LT side of DTR (LU)	Energy consumption at destination end during interval in LU		Initial Meter Reading at Consumer side (U)	Final Meter Reading at Consumer side (U)	Energy Consumption at Destination End during Interval in Unit	LT Line Loss in LU	
6	YADGIR	BALAICHAKRA	33/11KV	MAILAPUR-F4	25	Tayappa Bhangi TC	0.001	0.018	0.017	CHNRL1	2280	2343	63	0.002	10.199
										CHNRL2	1132	1147	15		
										CHNRL3	2738	2795	57		
										CHNRL4	478	487	9		
										CHNRL5	1566	1587	21		
										CHNRL6	2587	2654	67		
										CHNRL7	1147	1185	38		
										CHNRL8	2762	2787	25		
										CHNRL9	1102	1152	50		
										CHNRL10	1472	1508	36		
										CHNRL11	2014	2067	53		
										CHNRL12	1258	1269	11		
										CHNRL13	1893	1949	56		
										CHNRL9292	1550	1600	50		
										CHNRL12494	2287	2288	1		
										CHNRL12495	3287	3289	2		
										CHNRL12496	1139	1187	48		
										CHNRL12498	1108	1187	79		
										CHNRL12499	935	1017	82		
										CHNRL12500	1875	1947	72		
										CHNRL13358	1109	1138	29		
										CHNRL13359	5896	5907	11		
										CHNRL13360	135	147	12		
										CHNRL13361	1149	1235	86		
										CHNRL13362	1789	1859	70		
										CHNRL13363	1028	1087	59		
										CHNRL13351	1149	1158	9		
										CHNRL13352	1025	1107	82		
										CHNRL13353	1486	1510	24		
										CHNRL13354	2578	2579	1		
										CHNRL13364	3258	3290	32		
										CHNRL12491	1109	1136	27		
										CHNRL12492	458	598	140		
										CHNRL12493	221	336	115		
	Sub-Total 6						**0.001**	**0.018**	**0.017**				**1532**	**0.002**	**10.199**
7	SEDAM	220/110/11KV SEDAM	220/110/1	SIROLLI	100	TRIVEDI NAGAR-1	0.08	0.09	0.01	ML30354	133	135	2	0.001	11.884
										ML30349	14	20	6		
										ML30353	82	85	3		
										ML30352	33	37	4		
										ML30351	4	12	8		
										ML30350	84	92	8		
										ML30308	171	189	18		
										BDL30055	141	161	20		

Sl. No.	Name of Division	Name of PSS	Voltage Level	Name of Outgoing 11 kV Feeder	Distribution Transformer Capacity in kVA/ 11 kV Bulk Consumer	Distribution Transformer Location Code/ Bulk Consumer Location	A	B	C = B-A	Consumer ID No. /Meter No.	D	E	F = E-D	G=C-∑F	% of LT Loss w.r.t. Input Energy
							Initial Meter Reading at LT side of DTR (LU)	Final meter reading at LT side of DTR (LU)	Energy consumption at destination end during interval in LU		Initial Meter Reading at Consumer side (U)	Final Meter Reading at Consumer side (U)	Energy Consumption at Destination End during Interval in Unit	LT Line Loss in LU	
										ML30052	10	12	2		
										ML30050	730	732	2		
										ML29914	377	382	5		
										ML29915	50	58	8		
										ML29916	32	36	4		
										ML29917	30	63	33		
										ML29918	38	45	7		
										ML29919	10	12	2		
										IML29148	246	253	7		
										ML653	3353	3357	4		
										ML654	7809	7820	11		
										ML656	30920	30952	22		
										ML663	4652	4666	14		
										ML662	7061	7083	22		
										ML658	3304	3307	3		
										ML5900	3952	3968	16		
										ML5189	8505	8538	33		
										ML558	3069	3080	11		
										ML618	3458	3476	18		
										ML339	6062	6065	3		
										ML692	3401	3413	12		
										ML672	9367	9403	53		
										ML5198	2349	2368	19		
										ML457	1375	1386	11		
										ML638	6035	6043	8		
										ML637	398	399	1		
										ML665	2530	2532	2		
										ML649	2131	2146	15		
										ML668	4828	4868	40		
										ML350	4567	4583	16		
										ML4989	550	553	3		
	Sub-Total 7						**0.08**	**0.09**	**0.01**				**476**	**0.001**	**11.884**
8	SEDAM	220/110/11KV	220/110/1	SIROLLI	63	N.T.COLLEGE	0.10	0.13	0.03	ML4406	19628	19749	121	0.003	12.451
										ML4407	4961	5029	68		
										ML4408	1730	1806	76		
										ML4409	633	739	106		
										ML710	1482	1589	107		
										ML709	2037	2209	172		
										ML708	5222	5421	199		
										ML707	3649	3757	108		
										ML449	1156	1267	111		
										ML450	5446	5503	57		
										ML452	3571	3609	38		

Sl. No.	Name of Division	Name of PSS	Voltage Level	Name of Outgoing 11 kV Feeder	Distribution Transformer Capacity in kVA/ 11 kV Bulk Consumer	Distribution Transformer Location Code/ Bulk Consumer Location	A	B	C = B-A	Consumer ID No. /Meter No.	D	E	F = E-D	G=C-∑F	% of LT Loss w.r.t. Input Energy
							Initial Meter Reading at LT side of DTR (LU)	Final meter reading at LT side of DTR (LU)	Energy consumption at destination end during interval in LU		Initial Meter Reading at Consumer side (U)	Final Meter Reading at Consumer side (U)	Energy Consumption at Destination End during Interval in Unit	LT Line Loss in LU	
										ML4908	702	704	2		
										ML694	9999	10069	70		
										ML511	3585	3625	40		
										ML356	3940	3973	33		
										ML4	2755	2768	13		
										ML1	6696	6821	96		
										ML7	3652	3678	26		
										ML664	5623	5685	62		
										ML669	502	513	11		
										ML596	4469	4493	24		
										ML496	2372	2400	28		
										ML210	3553	3580	27		
										ML306	2611	2625	14		
										ML295	4198	4232	34		
										ML14	1220	1240	20		
										ML183	1212	1224	12		
										ML70	1465	1488	23		
										ML6	929	956	27		
										ML171	1168	1193	25		
										ML3	7741	7773	32		
										ML250	896	926	30		
										ML207	1	202	201		
										ML173	4024	4046	22		
										ML184	3376	3404	28		
										ML334	1916	1930	14		
										ML246	6484	6509	25		
										ML307	1638	1720	82		
										ML294	1644	1750	106		
										ML212	1559	1679	120		
Sub-Total 8							**0.10**	**0.13**	**0.03**				**2410**	**0.003**	**12.451**
9	SEDAM	220/110/11KV SEDAM	20/110/11K	SIROLLI	63	PATIL PRINTIG PRESS	0.10	0.11	0.01	ML645	296	313	17	0.001	11.484
										ML695	1583	1594	11		
										ML643	788	820	32		
										ML160	506	508	2		
										ML2	445	455	10		
										ML355	1900	1911	11		
										ML199	307	337	30		
										A166	1287	1290	3		
										A234	1847	1868	21		
										A249	9425	9610	185		
										A16383	2211	2275	64		
										KN8	1753	1781	28		
										MDN19	3841	3845	4		

Sl. No.	Name of Division	Name of PSS	Voltage Level	Name of Outgoing 11 kV Feeder	Distribution Transformer Capacity in kVA/ 11 kV Bulk Consumer	Distribution Transformer Location Code/ Bulk Consumer Location	A	B	C = B-A		D	E	F = E-D	G=C-∑F	
							Initial Meter Reading at LT side of DTR (LU)	Final meter reading at LT side of DTR (LU)	Energy consumption at destination end during interval in LU	Consumer ID No. /Meter No.	Initial Meter Reading at Consumer side (U)	Final Meter Reading at Consumer side (U)	Energy Consumption at Destination End during Interval in Unit	LT Line Loss in LU	% of LT Loss w.r.t. Input Energy
										MDN65	1451	1467	16		
										MDN76	3359	3367	8		
										MDN93	4549	4558	9		
										MDN5199	127	128	1		
										MDN5911	400	420	20		
										MDN15192	745	765	20		
										MDN97	1805	1813	8		
										KKL182	3019	3031	12		
										KKL4923	3145	3168	23		
										KKL141	3021	3042	21		
										KKL14863	380	401	21		
										KKL13404	31775	31908	133		
										KKL178	904	925	21		
										KKL4654	822	825	3		
										KKL116	1504	1511	7		
										KKL4413	7889	7908	19		
										KKL208	3754	3785	31		
										KKL16387	372	392	20		
										AML12030	289	312	23		
										AML12031	2535	2562	27		
										AML12032	2401	2423	22		
										AML12163	1350	1369	19		
										AKKL11197	3093	3120	27		
										AKKL11911	1058	1084	26		
										ATLKD6056	1214	1236	22		
										AKD13266	972	997	25		
Sub-Total 9							**0.10**	**0.11**	**0.01**				**1002**	**0.001**	**11.484**
Gulbarga Circle Total [Sub-Total 1 to 9]									**1.14**	**Total LT Line + Commercial Loss w.r.t. Input Energy in LU**				**0.170**	**14.976**
Total Energy at DTR side of Gulbarga Circle (Energy Input at 11 kV side at PSS - Energy Loss in 11 kV Feeders)									**1170.15**	**Gulbarga Circle LT Line + Commercial Loss w.r.t. Total Input Energy (11 kV side)**				**175.241**	**14.976**
Gulbarga Circle 11 kV side Input Energy									**1233.05**	**Gulbarga Circle LT + Commercial Loss w.r.t. Total Input Energy (11 kV side)**				**175.241**	**14.212**

LT LINE LOSS & COMMERCIAL LOSS DUE TO THEFT ASSESSMENT DETAIL OF CHIKKODI CIRCLE IN KARNATAKA STATE

E) LT LINE LOSS & COMMERCIAL LOSS DUT TO THEFT ASSESSMENT DETAIL OF CHIKODI CIRCLE

Sl.no	Name of Division	Name of PSS	Voltage Level	Name Out going 11 KV feeder	Distribution Transformer Capacity in KVA/11KV Bulk Consumer	Distribution Transformer Location-Code/Bulk Consumer Location.	A	B	C=B-A		D	E	F=E-D	G=C-∑F	
							Initial meter reading at LT side of DTR (LU)	Final meter reading at LT side of DTR (LU)	Energy consumption at destination end during interval in LU.	Consumer ID no/Meter no	Initial meter reading at Consumer side (U)	Final meter reading at consumer side (U)	Energy consumption at destination end during interval in Unit.	LT with Commercial loss in LU	% of LT loss w.r.t Input energy
1	Chikkodi	110/33/11 KV SADALGA	33/11	11KV SADALGA FEEDER	63	Ashray-III	2.29	2.31	0.02	BHJ1355			9	0.003	12.266
										BHJ15102			34		
										BHJ15273			32		
										BHJ1863			2		
										BHJ1865			29		
										BHJ1870			41		
										BHJ1880			40		
										BHJ1908			3		
										BHJ1927			16		
										BHJ1930			25		
										BHJ1931			3		
										BHJ1944			13		
										BHJ1946			29		
										BHJ1947			22		
										BHJ1948			13		
										BHJ1950			4		
										BHJ1963			8		
										BHJ1975			17		
										BHJ1977			13		
										BHJ1978			20		
										BHJ1985			2		
										BHJ1990			28		
										BHJ1994			4		
										BHJ1995			25		
										BHJ2010			4		
										BHJ2012			40		
										BHJ2016			10		
										BHJ2018			11		
										BHJ2019			20		
										BHJ2021			15		
										BHJ2026			24		
										BHJ2040			26		

Sl.no	Name of Division	Name of PSS	Voltage Level	Name Out going 11 KV feeder	Distribution Transformer Capacity in KVA/11KV Bulk Consumer	Distribution Transformer Location-Code/Bulk Consumer Location.	A	B	C=B-A		D	E	F=E-D	G=C-∑F	
							Initial meter reading at LT side of DTR (LU)	Final meter reading at LT side of DTR (LU)	Energy consumption at destination end during interval in LU.	Consumer ID no/Meter no	Initial meter reading at Consumer side (U)	Final meter reading at consumer side (U)	Energy consumption at destination end during interval in Unit.	LT with Commercial loss in LU	% of LT loss w.r.t Input energy
										BHJ2046			35		
										BHJ2053			1		
										BHJ2054			18		
										BHJ2058			16		
										BHJ2059			2		
										BHJ2061			11		
										BHJ29107			11		
										BHJ29171			19		
										BHJ29258			3		
										BHJ35602			20		
										BHJ43652			32		
										BHJ630			17		
										BHJ1075			21		
										BHJ1096			20		
										BHJ1099			19		
										BHJ1104			18		
										BHJ1134			36		
										BHJ1176			35		
										BHJ1221			24		
										BHJ1230			2		
										BHJ1234			5		
										BHJ1235			3		
										BHJ1236			1		
										BHJ1315			4		
										BHJ1367			14		
										BHJ1405			10		
										BHJ1407			25		
										BHJ1409			22		
										BHJ1485			21		
										BHJ1518			13		
										BHJ15284			36		
										BHJ1530			38		
										BHJ1541			16		
										BHJ1582			20		
										BHJ1644			2		
										BHJ1716			34		
										BHJ1727			35		
										BHJ1768			1		

Sl.no	Name of Division	Name of PSS	Voltage Level	Name Out going 11 KV feeder	Distribution Transformer Capacity in KVA/11KV Bulk Consumer	Distribution Transformer Location-Code/Bulk Consumer Location.	A	B	C=B-A		D	E	F=E-D	G=C-∑F	
							Initial meter reading at LT side of DTR (LU)	Final meter reading at LT side of DTR (LU)	Energy consumption at destination end during interval in LU.	Consumer ID no/Meter no	Initial meter reading at Consumer side (U)	Final meter reading at consumer side (U)	Energy consumption at destination end during interval in Unit.	LT with Commercial loss in LU	% of LT loss w.r.t Input energy
										BHJ1824			4		
										BHJ1825			7		
										BHJ1832			42		
										BHJ19010			26		
										BHJ19013			4		
										BHJ2017			1		
										BHJ2123			18		
										BHJ2124			25		
										BHJ2160			30		
										BHJ2164			15		
										BHJ21704			10		
										BHJ21786			12		
										BHJ22618			3		
										BHJ258			5		
										BHJ293			12		
										BHJ31129			17		
										BHJ31133			19		
										BHJ317			5		
										BHJ34573			28		
										BHJ34945			1		
										BHJ35446			71		
										BHJ36836			39		
										BHJ38552			2		
										BHJ40139			10		
										BHJ426			4		
										BHJ43054			14		
										BHJ43655			4		
										BHJ43813			1		
										BHJ43814			12		
										BHJ43815			20		
										BHJ43816			33		
										BHJ43982			32		
										BHJ43999			32		
										BHJ45702			36		
										BHJ45705			45		
										BHJ677			26		
										BHJ750			17		
										BHJ774			3		

Sl.no	Name of Division	Name of PSS	Voltage Level	Name Out going 11 KV feeder	Distribution Transformer Capacity in KVA/11KV Bulk Consumer	Distribution Transformer Location-Code/Bulk Consumer Location.	A	B	C=B-A		D	E	F=E-D	G=C-∑F	
							Initial meter reading at LT side of DTR (LU)	Final meter reading at LT side of DTR (LU)	Energy consumption at destination end during interval in LU.	Consumer ID no/Meter no	Initial meter reading at Consumer side (U)	Final meter reading at consumer side (U)	Energy consumption at destination end during interval in Unit.	LT with Commercial loss in LU	% of LT loss w.r.t Input energy
										BHJ798			2		
										BHJ820			1		
										BHJ875			28		
										BHJ916			52		
										BHJ928			40		
										BHJ31556			26		
										BHJ39889			62		
										BHJ42553			22		
Sub-Total 1													**2,160**		
2	Chikkodi	110/33/11 KV	33/11	11KV	63	Gumpa	2.31	2.38	0.06	SDG46397			18	0.008	13.218
										SDG45401			16		
										SDG44953			109		
										SDG45582			45		
										SDG44596			8		
										SDG33710			124		
										SDG35152			87		
										SDG35105			142		
										SDG35387			64		
										SDG41681			75		
										SDG36998			9		
										SDG37142			7		
										SDG36569			80		
										SDG36643			57		
										SDG36642			90		
										SDG35549			68		
										SDG31271			85		
										SDG31272			112		
										SDG28993			84		
										SDG23374			94		
										SDG31217			79		
										SDG31230			36		
										SDG18495			78		
										SDG1268			28		
										SDG1261			24		
										SDG23054			76		
										SDG34383			30		
										SDG45951			80		

Sl.no	Name of Division	Name of PSS	Voltage Level	Name Out going 11 KV feeder	Distribution Transformer Capacity in KVA/11KV Bulk Consumer	Distribution Transformer Location-Code/Bulk Consumer Location.	A	B	C=B-A		D	E	F=E-D	G=C-∑F	
							Initial meter reading at LT side of DTR (LU)	Final meter reading at LT side of DTR (LU)	Energy consumption at destination end during interval in LU.	Consumer ID no/Meter no	Initial meter reading at Consumer side (U)	Final meter reading at consumer side (U)	Energy consumption at destination end during interval in Unit.	LT with Commercial loss in LU	% of LT loss w.r.t Input energy
										SDG46260			84		
										SDG44243			54		
										SDG44244			147		
										SDG39420			40		
										SDG40351			130		
										SDG42125			107		
										SDG36609			58		
										SDG36570			178		
										SDG2536			421		
										SDG22086			202		
										SDG550			116		
										SDG34478			56		
										SDG28749			77		
										SDG34650			406		
										SDG1798			306		
										SDG35571			111		
										SDG15457			108		
										SDG1795			143		
										SDG45511			211		
										SDG44347			187		
										SDGMP41226			182		
										SDG36034			399		
Sub-Total 2													**5,528**		
3	Chikkodi	110/33/11 KV	33/11	11KV	25	A. N. Patil	4.68	4.72	0.04	SDN41840			35	0.006	13.583
										SDNCL16094			47		
										SDNCL177			40		
										SDN15			5		
										SDN167			31		
										SDN17			54		
										SDN173			56		
										SDN19183			87		
										SDN216			21		
										SDN21735			138		
										SDN222			52		
										SDN22674			180		
										SDN24			40		
										SDN25			36		

Sl.no	Name of Division	Name of PSS	Voltage Level	Name Out going 11 KV feeder	Distribution Transformer Capacity in KVA/11KV Bulk Consumer	Distribution Transformer Location-Code/Bulk Consumer Location.	A	B	C=B-A		D	E	F=E-D	G=C-∑F	
							Initial meter reading at LT side of DTR (LU)	Final meter reading at LT side of DTR (LU)	Energy consumption at destination end during interval in LU.	Consumer ID no/Meter no	Initial meter reading at Consumer side (U)	Final meter reading at consumer side (U)	Energy consumption at destination end during interval in Unit.	LT with Commercial loss in LU	% of LT loss w.r.t Input energy
										SDN28119			84		
										SDN28120			92		
										SDN28181			139		
										SDN28182			78		
										SDN288			74		
										SDN289			76		
										SDN291			68		
										SDN311			3		
										SDN331			52		
										SDN35			49		
										SDN35866			80		
										SDN35867			144		
										SDN36			50		
										SDN38893			153		
										SDN39937			113		
										SDN41			43		
										SDN42703			39		
										SDN43474			210		
										SDN44			34		
										SDN44325			146		
										SDN46969			220		
										SDN49			170		
										SDN57			176		
										SDN81			150		
										SDN82			42		
										SDN88			113		
										SDN41531			200		
Sub-Total 3													**3,620**		
4	Chikkodi	110/33/11 KV	33/11	11KV	25	Kannada School	3.65	3.71	0.06	SDG47182			41	0.010	14.899
										SDG37907			50		
										SDG37862			49		
										SDG37612			26		
										SDG37614			49		
										SDG37104			64		
										SDG37063			28		
										SDG37469			54		
										SDG37466			2		

Sl.no	Name of Division	Name of PSS	Voltage Level	Name Out going 11 KV feeder	Distribution Transformer Capacity in KVA/11KV Bulk Consumer	Distribution Transformer Location-Code/Bulk Consumer Location.	A	B	C=B-A		D	E	F=E-D	G=C-∑F	
							Initial meter reading at LT side of DTR (LU)	Final meter reading at LT side of DTR (LU)	Energy consumption at destination end during interval in LU.	Consumer ID no/Meter no	Initial meter reading at Consumer side (U)	Final meter reading at consumer side (U)	Energy consumption at destination end during interval in Unit.	LT with Commercial loss in LU	% of LT loss w.r.t Input energy
										SDG37506			56		
										SDG36822			36		
										SDG35926			59		
										SDG36572			67		
										SDG35885			58		
										SDG35817			29		
										SDG35828			53		
										SDG36007			60		
										SDG35436			46		
										SDG35557			4		
										SDG35477			60		
										SDG35479			40		
										SDG35478			52		
										SDG2679			59		
										SDG22540			87		
										SDG1746			78		
										SDG2962			73		
										SDG19547			2		
										SDG22242			84		
										SDG18750			70		
										SDG29955			54		
										SDG19809			67		
										SDG31229			37		
										SDG19548			49		
										SDG23987			30		
										SDG27391			46		
										SDG26743			56		
										SDG26766			39		
										SDG19544			43		
										SDG19543			69		
										SDG18767			5		
										SDG19545			30		
										SDG19826			60		
										SDG27450			31		
										SDG19692			89		
										SDG26406			41		
										SDG22067			53		
										SDG22069			49		

Sl.no	Name of Division	Name of PSS	Voltage Level	Name Out going 11 KV feeder	Distribution Transformer Capacity in KVA/11KV Bulk Consumer	Distribution Transformer Location-Code/Bulk Consumer Location.	A	B	C=B-A		D	E	F=E-D	G=C-∑F	
							Initial meter reading at LT side of DTR (LU)	Final meter reading at LT side of DTR (LU)	Energy consumption at destination end during interval in LU.	Consumer ID no/Meter no	Initial meter reading at Consumer side (U)	Final meter reading at consumer side (U)	Energy consumption at destination end during interval in Unit.	LT with Commercial loss in LU	% of LT loss w.r.t Input energy
										SDG22056			67		
										SDG18701			37		
										SDG22057			44		
										SDG18330			35		
										SDG22061			36		
										SDG19546			32		
										SDG23375			43		
										SDG24322			35		
										SDG24988			54		
										SDG24347			87		
										SDG31744			31		
										SDG31740			53		
										SDG1529			56		
										SDG24341			67		
										SDG2746			43		
										SDG2275			24		
										SDG41494			36		
										SDG40612			46		
										SDG39773			38		
										SDG39959			61		
										SDG42012			25		
										SDG42022			58		
										SDG41860			21		
										SDG41776			42		
										SDG41772			37		
										SDG41770			82		
										SDG38050			21		
										SDG38909			69		
										SDG35096			87		
										SDG35282			65		
										SDG34875			3		
										SDG34935			36		
										SDG34636			73		
										SDG18493			68		
										SDG1519			62		
										SDG46035			27		
										SDG46416			66		
										SDG45107			154		

Sl.no	Name of Division	Name of PSS	Voltage Level	Name Out going 11 KV feeder	Distribution Transformer Capacity in KVA/11KV Bulk Consumer	Distribution Transformer Location-Code/Bulk Consumer Location.	A	B	C=B-A		D	E	F=E-D	G=C-∑F	
							Initial meter reading at LT side of DTR (LU)	Final meter reading at LT side of DTR (LU)	Energy consumption at destination end during interval in LU.	Consumer ID no/Meter no	Initial meter reading at Consumer side (U)	Final meter reading at consumer side (U)	Energy consumption at destination end during interval in Unit.	LT with Commercial loss in LU	% of LT loss w.r.t Input energy
										SDG44931			120		
										SDG44930			135		
										SDG44253			173		
										SDG44251			42		
										SDG44105			33		
										SDG41746			234		
										SDG38764			172		
										SDGMP41891			133		
										SDG36064			242		
Sub-Total 4													**5,489**		
5	Chikkodi	110/33/11 KV	33/11	11KV	63	Datta Chowk	10.53	10.64	0.11	SDG1029			37	0.017	15.001
										SDG2980			56		
										SDG1574			39		
										SDG26949			40		
										SDG26958			83		
										SDG1923			39		
										SDG22			46		
										SDG2225			33		
										SDG18139			66		
										SDG626			5		
										SDG35972			4		
										SDG36160			9		
										SDG36962			46		
										SDG114			45		
										SDG1717			72		
										SDG123			60		
										SDG1954			79		
										SDG2061			79		
										SDG1900			30		
										SDG17889			62		
										SDG830			93		
										SDG27363			143		
										SDG1003			29		
										SDG1705			37		
										SDG27417			52		
										SDG1418			15		
										SDG1552			35		

Sl.no	Name of Division	Name of PSS	Voltage Level	Name Out going 11 KV feeder	Distribution Transformer Capacity in KVA/11KV Bulk Consumer	Distribution Transformer Location-Code/Bulk Consumer Location.	A	B	C=B-A		D	E	F=E-D	G=C-∑F	
							Initial meter reading at LT side of DTR (LU)	Final meter reading at LT side of DTR (LU)	Energy consumption at destination end during interval in LU.	Consumer ID no/Meter no	Initial meter reading at Consumer side (U)	Final meter reading at consumer side (U)	Energy consumption at destination end during interval in Unit.	LT with Commercial loss in LU	% of LT loss w.r.t Input energy
										SDG2570			28		
										SDG1437			78		
										SDG1274			48		
										SDG164			132		
										SDG27415			147		
										SDG54			41		
										SDG2318			51		
										SDG21			22		
										SDG1248			48		
										SDG712			103		
										SDG19552			26		
										SDG1929			59		
										SDG24			60		
										SDG18366			17		
										SDG1865			40		
										SDG559			36		
										SDG26800			11		
										SDG63			132		
										SDG613			95		
										SDG2486			60		
										SDG1551			39		
										SDG19			87		
										SDG1856			46		
										SDG49			48		
										SDG1706			30		
										SDG1012			109		
										SDG2655			13		
										SDG1541			34		
										SDG76			72		
										SDG992			62		
										SDG19695			48		
										SDG1850			49		
										SDG1877			88		
										SDG2168			33		
										SDG2169			16		
										SDG482			48		
										SDG124			43		
										SDG115			51		

Sl.no	Name of Division	Name of PSS	Voltage Level	Name Out going 11 KV feeder	Distribution Transformer Capacity in KVA/11KV Bulk Consumer	Distribution Transformer Location-Code/Bulk Consumer Location.	A	B	C=B-A		D	E	F=E-D	G=C-∑F	
							Initial meter reading at LT side of DTR (LU)	Final meter reading at LT side of DTR (LU)	Energy consumption at destination end during interval in LU.	Consumer ID no/Meter no	Initial meter reading at Consumer side (U)	Final meter reading at consumer side (U)	Energy consumption at destination end during interval in Unit.	LT with Commercial loss in LU	% of LT loss w.r.t Input energy
										SDG120			53		
										SDG102			29		
										SDG2931			49		
										SDG57			61		
										SDG445			61		
										SDG125			119		
										SDG210			123		
										SDG19697			129		
										SDG1660			39		
										SDG108			80		
										SDG287			194		
										SDG30045			12		
										SDG2009			80		
										SDG1040			26		
										SDG51			39		
										SDG435			51		
										SDG1539			50		
										SDG26777			22		
										SDG151			28		
										SDG23807			29		
										SDG2167			39		
										SDG137			31		
										SDG299			23		
										SDG26432			51		
										SDG58			51		
										SDG1931			101		
										SDG26778			130		
										SDG2257			19		
										SDG1027			22		
										SDG122			42		
										SDG33639			58		
										SDG38571			3		
										SDG39131			19		
										SDG45581			41		
										SDG44950			27		
										SDG42950			41		
										SDG36657			70		
										SDG652			78		

Sl.no	Name of Division	Name of PSS	Voltage Level	Name Out going 11 KV feeder	Distribution Transformer Capacity in KVA/11KV Bulk Consumer	Distribution Transformer Location-Code/Bulk Consumer Location.	A	B	C=B-A		D	E	F=E-D	G=C-∑F	
							Initial meter reading at LT side of DTR (LU)	Final meter reading at LT side of DTR (LU)	Energy consumption at destination end during interval in LU.	Consumer ID no/Meter no	Initial meter reading at Consumer side (U)	Final meter reading at consumer side (U)	Energy consumption at destination end during interval in Unit.	LT with Commercial loss in LU	% of LT loss w.r.t Input energy
										SDG333			29		
										SDG856			98		
										SDG52			131		
										SDG30007			55		
										SDG2457			11		
										SDG483			128		
										SDG411			120		
										SDG769			18		
										SDG98			219		
										SDG41465			213		
										SDG1668			124		
										SDG47198			41		
										SDG47169			25		
										SDG36067			218		
										SDG37044			228		
										SDG18709			12		
										SDG37878			10		
										SDG32076			20		
										SDG1934			18		
										SDG2764			11		
										SDG2155			112		
										SDG39			177		
										SDG544			15		
										SDG656			72		
										SDG1099			37		
										SDG501			10		
										SDG1779			35		
										SDG655			156		
										SDG2127			12		
										SDG18711			24		
										SDG198			29		
										SDG31385			92		
										SDG23056			183		
										SDG26695			48		
										SDG24970			15		
										SDG24927			241		
										SDG520			271		

Sl.no	Name of Division	Name of PSS	Voltage Level	Name Out going 11 KV feeder	Distribution Transformer Capacity in KVA/11KV Bulk Consumer	Distribution Transformer Location-Code/Bulk Consumer Location.	A	B	C=B-A		D	E	F=E-D	G=C-∑F	
							Initial meter reading at LT side of DTR (LU)	Final meter reading at LT side of DTR (LU)	Energy consumption at destination end during interval in LU.	Consumer ID no/Meter no	Initial meter reading at Consumer side (U)	Final meter reading at consumer side (U)	Energy consumption at destination end during interval in Unit.	LT with Commercial loss in LU	% of LT loss w.r.t Input energy
										SDG2636			244		
										SDGMP18352			171		
										SDG83			242		
Sub-Total 5													9,519		
6	CHIKKODI	110/33/11 KV	33/11	11KV	63	Badiger	7.49	7.57	0.09	SDG1041			17	0.017	18.904
										SDG19602			4		
										SDG938			36		
										SDG17808			31		
										SDG28903			26		
										SDG930			13		
										SDG931			25		
										SDG592			54		
										SDG2361			44		
										SDG572			67		
										SDG952			33		
										SDG612			24		
										SDG24936			24		
										SDG167			21		
										SDG500			38		
										SDG1464			14		
										SDG1273			40		
										SDG2319			41		
										SDG697			31		
										SDG705			32		
										SDG770			52		
										SDG26703			64		
										SDG507			56		
										SDG851			10		
										SDG1879			20		
										SDG1926			74		
										SDG27033			31		
										SDG687			71		
										SDG2710			27		
										SDG34616			19		
										SDG1838			16		
										SDG1240			36		
										SDG158			41		

Sl.no	Name of Division	Name of PSS	Voltage Level	Name Out going 11 KV feeder	Distribution Transformer Capacity in KVA/11KV Bulk Consumer	Distribution Transformer Location-Code/Bulk Consumer Location.	A	B	C=B-A		D	E	F=E-D	G=C-∑F	
							Initial meter reading at LT side of DTR (LU)	Final meter reading at LT side of DTR (LU)	Energy consumption at destination end during interval in LU.	Consumer ID no/Meter no	Initial meter reading at Consumer side (U)	Final meter reading at consumer side (U)	Energy consumption at destination end during interval in Unit.	LT with Commercial loss in LU	% of LT loss w.r.t Input energy
										SDG684			61		
										SDG15400			89		
										SDG573			66		
										SDG145			62		
										SDG27952			56		
										SDG26413			41		
										SDG2093			12		
										SDG633			9		
										SDG614			16		
										SDG214			77		
										SDG2718			29		
										SDG2092			27		
										SDG26427			39		
										SDG1388			19		
										SDG18716			17		
										SDG1448			32		
										SDG31226			65		
										SDG901			44		
										SDG26433			45		
										SDG1057			57		
										SDG50			42		
										SDG16170			25		
										SDG317			72		
										SDG22212			14		
										SDG2469			31		
										SDG316			72		
										SDG1889			18		
										SDG489			88		
										SDG2050			42		
										SDG1965			78		
										SDG15498			43		
										SDG2081			37		
										SDG788			65		
										SDG1295			17		
										SDG2857			42		
										SDG1884			43		
										SDG26475			35		
										SDG27423			8		

Sl.no	Name of Division	Name of PSS	Voltage Level	Name Out going 11 KV feeder	Distribution Transformer Capacity in KVA/11KV Bulk Consumer	Distribution Transformer Location-Code/Bulk Consumer Location.	A	B	C=B-A		D	E	F=E-D	G=C-∑F	
							Initial meter reading at LT side of DTR (LU)	Final meter reading at LT side of DTR (LU)	Energy consumption at destination end during interval in LU.	Consumer ID no/Meter no	Initial meter reading at Consumer side (U)	Final meter reading at consumer side (U)	Energy consumption at destination end during interval in Unit.	LT with Commercial loss in LU	% of LT loss w.r.t Input energy
										SDG1555			3		
										SDG419			59		
										SDG1447			35		
										SDG1767			31		
										SDG1389			27		
										SDG1334			51		
										SDG17860			10		
										SDG1903			25		
										SDG1862			23		
										SDG981			9		
										SDG1465			31		
										SDG620			20		
										SDG17847			27		
										SDG92			50		
										SDG975			55		
										SDG18			19		
										SDG95			54		
										SDG906			98		
										SDG1016			7		
										SDG26956			46		
										SDG255			15		
										SDG1872			51		
										SDG27957			54		
										SDG17			68		
										SDG1032			2		
										SDG2414			60		
										SDG1376			55		
										SDG2761			31		
										SDG2644			39		
										SDG1858			31		
										SDG27130			54		
										SDG2459			53		
										SDG1313			46		
										SDG2507			41		
										SDG23808			51		
										SDG2171			26		
										SDG657			36		
										SDG1125			28		

Sl.no	Name of Division	Name of PSS	Voltage Level	Name Out going 11 KV feeder	Distribution Transformer Capacity in KVA/11KV Bulk Consumer	Distribution Transformer Location-Code/Bulk Consumer Location.	A	B	C=B-A		D	E	F=E-D	G=C-∑F	
							Initial meter reading at LT side of DTR (LU)	Final meter reading at LT side of DTR (LU)	Energy consumption at destination end during interval in LU.	Consumer ID no/Meter no	Initial meter reading at Consumer side (U)	Final meter reading at consumer side (U)	Energy consumption at destination end during interval in Unit.	LT with Commercial loss in LU	% of LT loss w.r.t Input energy
										SDG2500			69		
										SDG22459			34		
										SDG2118			14		
										SDG26435			14		
										SDG1835			78		
										SDG2698			21		
										SDG444			37		
										SDG1253			56		
										SDG648			13		
										SDG257			34		
										SDG1292			95		
										SDG389			84		
										SDG471			64		
										SDG1296			41		
										SDG2337			97		
										SDG2694			14		
										SDG26810			20		
										SDG37783			4		
										SDG37583			45		
										SDG2855			19		
										SDG36850			19		
										SDG35483			25		
										SDG35537			43		
										SDG35630			2		
										SDG35631			19		
										SDG35619			45		
										SDG35632			35		
										SDG34075			14		
										SDG34867			82		
										SDG38451			3		
										SDG38531			32		
										SDG38615			43		
										SDG40355			38		
										SDG39958			78		
										SDG39895			86		
										SDG41683			4		
										SDG34672			8		
										SDG2177			57		

Sl.no	Name of Division	Name of PSS	Voltage Level	Name Out going 11 KV feeder	Distribution Transformer Capacity in KVA/11KV Bulk Consumer	Distribution Transformer Location-Code/Bulk Consumer Location.	A	B	C=B-A		D	E	F=E-D	G=C-∑F	
							Initial meter reading at LT side of DTR (LU)	Final meter reading at LT side of DTR (LU)	Energy consumption at destination end during interval in LU.	Consumer ID no/Meter no	Initial meter reading at Consumer side (U)	Final meter reading at consumer side (U)	Energy consumption at destination end during interval in Unit.	LT with Commercial loss in LU	% of LT loss w.r.t Input energy
										SDG628			62		
										SDG1039			61		
										SDG766			71		
										SDG937			26		
										SDG10			62		
										SDG173			73		
										SDG29957			91		
										SDG35990			80		
										SDG789			19		
										SDG46743			7		
										SDG26375			23		
										SDG34368			23		
										SDG33660			43		
										SDG24463			4		
										SDG2729			5		
										SDG17997			2		
										SDG534			0		
										SDG2564			17		
										SDG31791			205		
										SDG44692			29		
										SDGMP2592			1		
										SDG37976			103		
										EXA37098			41		
										EXA37097			6		
										EXA38763			35		
										EXA38760			62		
										EXA38761			19		
										EXA38762			82		
										EXA1087			54		
										EXA1088			54		
										EXA1252			9		
										EXA22031			71		
										EXA15529			30		
										EXA26419			35		
										EXA45776			49		
										EXA43675			35		
Sub-Total 6													**7,263**		

Sl.no	Name of Division	Name of PSS	Voltage Level	Name Out going 11 KV feeder	Distribution Transformer Capacity in KVA/11KV Bulk Consumer	Distribution Transformer Location-Code/Bulk Consumer Location.	A	B	C=B-A		D	E	F=E-D	G=C-∑F	
							Initial meter reading at LT side of DTR (LU)	Final meter reading at LT side of DTR (LU)	Energy consumption at destination end during interval in LU.	Consumer ID no/Meter no	Initial meter reading at Consumer side (U)	Final meter reading at consumer side (U)	Energy consumption at destination end during interval in Unit.	LT with Commercial loss in LU	% of LT loss w.r.t Input energy
7	Chikkodi	110/33/11 KV SADALGA	33/11	11 KV Sadalga Feeder	100	Thaloba	0.66	0.88	0.22	JND47			53	0.035	16.210
										JND46			17		
										JND344			51		
										JND168			61		
										JND332			31		
										JND285			43		
										JND68			23		
										JND317			29		
										JND130			15		
										JND98			18		
										JND161			19		
										JND430			17		
										JND229			22		
										JND429			16		
										JND90			38		
										JND27			32		
										JND24949			28		
										JND174			35		
										JND274			178		
										JND178			60		
										JND402			21		
										JND38			31		
										JND351			38		
										JND353			56		
										JND6			32		
										JND8			160		
										JND123			115		
										JND22568			116		
										JND316			126		
										JND249			37		
										JND267			227		
										JND43			25		
										JND216			119		
										JND11			179		
										JND154			25		
										JND87			253		
										JND222			65		

Sl.no	Name of Division	Name of PSS	Voltage Level	Name Out going 11 KV feeder	Distribution Transformer Capacity in KVA/11KV Bulk Consumer	Distribution Transformer Location-Code/Bulk Consumer Location.	A	B	C=B-A		D	E	F=E-D	G=C-∑F	
							Initial meter reading at LT side of DTR (LU)	Final meter reading at LT side of DTR (LU)	Energy consumption at destination end during interval in LU.	Consumer ID no/Meter no	Initial meter reading at Consumer side (U)	Final meter reading at consumer side (U)	Energy consumption at destination end during interval in Unit.	LT with Commercial loss in LU	% of LT loss w.r.t Input energy
										JND24939			185		
										JND537			233		
										JND420			234		
										JND127			45		
										JND225			28		
										JND405			120		
										JND28763			71		
										JND16			65		
										JND423			14		
										JND215			53		
										JND36			120		
										JND22300			147		
										JND277			252		
										JND52			224		
										JND26965			78		
										JND217			212		
										JND412			34		
										JND45			121		
										JND505			41		
										JND26			32		
										JND450			14		
										JND63			49		
										JND70			14		
										JND22213			123		
										JND61			188		
										JND37			111		
										JND35			196		
										JND302			115		
										JND257			24		
										JND400			136		
										JND475			53		
										JND436			18		
										JND129			110		
										JND44			27		
										JND75			238		
										JND23			24		
										JND1			213		
										JND221			15		

Sl.no	Name of Division	Name of PSS	Voltage Level	Name Out going 11 KV feeder	Distribution Transformer Capacity in KVA/11KV Bulk Consumer	Distribution Transformer Location-Code/Bulk Consumer Location.	A	B	C=B-A		D	E	F=E-D	G=C-∑F	
							Initial meter reading at LT side of DTR (LU)	Final meter reading at LT side of DTR (LU)	Energy consumption at destination end during interval in LU.	Consumer ID no/Meter no	Initial meter reading at Consumer side (U)	Final meter reading at consumer side (U)	Energy consumption at destination end during interval in Unit.	LT with Commercial loss in LU	% of LT loss w.r.t Input energy
										JND556			145		
										JND14			130		
										JND544			137		
										JND318			38		
										JND278			174		
										JND397			24		
										JND20			31		
										JND446			229		
										JND34			113		
										JND179			46		
										JND66			53		
										JND4			61		
										JND49			253		
										JND50			165		
										JND270			23		
										JND59			139		
										JND28			122		
										JND453			157		
										JND27198			10		
										JND31318			232		
										JND30057			28		
										JND552			221		
										JND437			105		
										JND224			124		
										JND349			44		
										JND504			19		
										JND223			39		
										JND25			25		
										JND352			34		
										JND126			13		
										JND26971			115		
										JND41			145		
										JND431			223		
										JND417			23		
										JND37159			239		
										JND37156			18		
										JND35871			111		
										JND35683			49		

Sl.no	Name of Division	Name of PSS	Voltage Level	Name Out going 11 KV feeder	Distribution Transformer Capacity in KVA/11KV Bulk Consumer	Distribution Transformer Location-Code/Bulk Consumer Location.	A	B	C=B-A		D	E	F=E-D	G=C-∑F	
							Initial meter reading at LT side of DTR (LU)	Final meter reading at LT side of DTR (LU)	Energy consumption at destination end during interval in LU.	Consumer ID no/Meter no	Initial meter reading at Consumer side (U)	Final meter reading at consumer side (U)	Energy consumption at destination end during interval in Unit.	LT with Commercial loss in LU	% of LT loss w.r.t Input energy
										JND385			139		
										JND443			116		
										JND27907			16		
										JND540			179		
										JND7			21		
										JND288			187		
										JND39699			54		
										JND34057			106		
										JND33570			15		
										JND39480			80		
										JND39171			23		
										JND350			230		
										JND46781			141		
										JND46069			164		
										JND43139			182		
										JND43136			118		
										JND45661			113		
										JND45413			211		
										JND44421			174		
										JND44424			116		
										JND347			139		
										JND105			70		
										JND41347			18		
										JND24			107		
										JND46261			224		
										JND46075			171		
										JND47122			99		
										JND43844			217		
										JND45092			42		
										JND44469			139		
										JND207			210		
										JND15			265		
										JND24594			121		
										JND24955			276		
										JND24956			212		
										JND36968			83		
										JND36969			123		
										JND26557			89		

Sl.no	Name of Division	Name of PSS	Voltage Level	Name Out going 11 KV feeder	Distribution Transformer Capacity in KVA/11KV Bulk Consumer	Distribution Transformer Location-Code/Bulk Consumer Location.	A	B	C=B-A		D	E	F=E-D	G=C-∑F	
							Initial meter reading at LT side of DTR (LU)	Final meter reading at LT side of DTR (LU)	Energy consumption at destination end during interval in LU.	Consumer ID no/Meter no	Initial meter reading at Consumer side (U)	Final meter reading at consumer side (U)	Energy consumption at destination end during interval in Unit.	LT with Commercial loss in LU	% of LT loss w.r.t Input energy
										JND24962			61		
										JND31723			107		
										JND23028			113		
										JND169			211		
										JND46274			138		
										JND43711			216		
										JND24958			191		
										JND43152			143		
										JND46198			15		
										JNDMP40664			118		
										JNDMP39138			208		
										JND247			113		
										JND42			98		
										JND111			37		
										JND48			89		
										JND44182			25		
										JND24947			46		
										JND26966			130		
										JND157			123		
										JND212			124		
										JND233			10		
										JND26969			119		
										JND117			37		
										JND184			202		
										JND213			168		
										JND455			14		
Sub-Total 7													**18,091**		
8	CHIKKODI	110/33/11 KV SADALGA	33/11	11KV SADALGA FEEDER	100	Janata Plot	10.13	10.25	0.12	SDG36522			56	0.014	11.708
										SDG36574			43		
										SDG36555			15		
										SDG35754			45		
										SDG36597			12		
										SDG37099			15		
										SDG36987			40		
										SDG37095			37		
										SDG37093			45		
										SDG37786			22		

Sl.no	Name of Division	Name of PSS	Voltage Level	Name Out going 11 KV feeder	Distribution Transformer Capacity in KVA/11KV Bulk Consumer	Distribution Transformer Location-Code/Bulk Consumer Location.	A	B	C=B-A		D	E	F=E-D	G=C-∑F	
							Initial meter reading at LT side of DTR (LU)	Final meter reading at LT side of DTR (LU)	Energy consumption at destination end during interval in LU.	Consumer ID no/Meter no	Initial meter reading at Consumer side (U)	Final meter reading at consumer side (U)	Energy consumption at destination end during interval in Unit.	LT with Commercial loss in LU	% of LT loss w.r.t Input energy
										SDG37487			18		
										SDG35829			16		
										SDG2929			26		
										SDG19829			43		
										SDG26797			25		
										SDG23989			26		
										SDG22096			42		
										SDG23325			31		
										SDG22095			26		
										SDG22099			29		
										SDG1680			73		
										SDG18324			64		
										SDG19554			28		
										SDG22206			69		
										SDG22250			17		
										SDG18458			49		
										SDG2313			63		
										SDG24329			22		
										SDG27454			90		
										SDG1829			93		
										SDG31225			60		
										SDG24326			34		
										SDG1899			54		
										SDG22091			65		
										SDG2975			17		
										SDG2110			37		
										SDG24342			28		
										SDG1831			92		
										SDG2032			48		
										SDG26408			51		
										SDG1935			21		
										SDG2025			23		
										SDG26717			40		
										SDG2095			233		
										SDG1815			68		
										SDG2126			99		
										SDG27440			211		
										SDG2111			43		

Sl.no	Name of Division	Name of PSS	Voltage Level	Name Out going 11 KV feeder	Distribution Transformer Capacity in KVA/11KV Bulk Consumer	Distribution Transformer Location-Code/Bulk Consumer Location.	A	B	C=B-A		D	E	F=E-D	G=C-∑F	
							Initial meter reading at LT side of DTR (LU)	Final meter reading at LT side of DTR (LU)	Energy consumption at destination end during interval in LU.	Consumer ID no/Meter no	Initial meter reading at Consumer side (U)	Final meter reading at consumer side (U)	Energy consumption at destination end during interval in Unit.	LT with Commercial loss in LU	% of LT loss w.r.t Input energy
										SDG19506			32		
										SDG23993			23		
										SDG2796			105		
										SDG2112			50		
										SDG26716			214		
										SDG2725			120		
										SDG2246			38		
										SDG24457			39		
										SDG2647			26		
										SDG2345			52		
										SDG23802			195		
										SDG2669			63		
										SDG17906			32		
										SDG22553			18		
										SDG26395			13		
										SDG27419			30		
										SDG26355			352		
										SDG24334			207		
										SDG1874			71		
										SDG27258			29		
										SDG2347			111		
										SDG1916			52		
										SDG1917			28		
										SDG2047			41		
										SDG2392			43		
										SDG1839			48		
										SDG27418			392		
										SDG26712			17		
										SDG26807			11		
										SDG2734			53		
										SDG2137			26		
										SDG2066			22		
										SDG1806			22		
										SDG1805			30		
										SDG27453			9		
										SDG31228			37		
										SDG2839			10		
										SDG19699			45		

Sl.no	Name of Division	Name of PSS	Voltage Level	Name Out going 11 KV feeder	Distribution Transformer Capacity in KVA/11KV Bulk Consumer	Distribution Transformer Location-Code/Bulk Consumer Location.	A	B	C=B-A		D	E	F=E-D	G=C-∑F	
							Initial meter reading at LT side of DTR (LU)	Final meter reading at LT side of DTR (LU)	Energy consumption at destination end during interval in LU.	Consumer ID no/Meter no	Initial meter reading at Consumer side (U)	Final meter reading at consumer side (U)	Energy consumption at destination end during interval in Unit.	LT with Commercial loss in LU	% of LT loss w.r.t Input energy
										SDG27402			59		
										SDG1811			12		
										SDG26794			231		
										SDG1992			44		
										SDG33737			46		
										SDG2939			11		
										SDG2736			41		
										SDG31275			53		
										SDG2735			24		
										SDG2732			133		
										SDG2731			71		
										SDG2733			58		
										SDG26742			40		
										SDG26801			22		
										SDG31377			48		
										SDG26782			52		
										SDG24991			20		
										SDG18329			256		
										SDG22105			35		
										SDG29956			41		
										SDG2903			143		
										SDG22064			44		
										SDG27406			56		
										SDG1974			29		
										SDG34769			17		
										SDG34744			42		
										SDG19698			42		
										SDG27274			52		
										SDG2115			51		
										SDG1808			41		
										SDG26351			21		
										SDG2054			33		
										SDG39133			16		
										SDG38516			49		
										SDG38554			47		
										SDG38525			37		
										SDG38409			32		
										SDG38053			29		

Sl.no	Name of Division	Name of PSS	Voltage Level	Name Out going 11 KV feeder	Distribution Transformer Capacity in KVA/11KV Bulk Consumer	Distribution Transformer Location-Code/Bulk Consumer Location.	A	B	C=B-A		D	E	F=E-D	G=C-∑F	
							Initial meter reading at LT side of DTR (LU)	Final meter reading at LT side of DTR (LU)	Energy consumption at destination end during interval in LU.	Consumer ID no/Meter no	Initial meter reading at Consumer side (U)	Final meter reading at consumer side (U)	Energy consumption at destination end during interval in Unit.	LT with Commercial loss in LU	% of LT loss w.r.t Input energy
										SDG38055			49		
										SDG33708			17		
										SDG33709			27		
										SDG34934			47		
										SDG34936			46		
										SDG41436			43		
										SDG41261			18		
										SDG40755			30		
										SDG40487			48		
										SDG40485			56		
										SDG40425			40		
										SDG40521			18		
										SDG40023			42		
										SDG42291			19		
										SDG41747			28		
										SDG41745			37		
										SDG41706			367		
										SDG41704			356		
										SDG34632			232		
										SDG42438			384		
										SDG44391			419		
										SDG45958			314		
										SDG46179			298		
										SDG894			172		
										SDG37253			512		
Sub-Total 8													**10,807**		
9	Chikkodi	110/33/11 KV	33/11	11KV	10	Urdu School	1.24	1.33	0.08	SDG44594			3	0.005	6.315
										SDG45670			25		
										SDG44780			12		
										SDG45435			14		
										SDG44957			13		
										SDG42952			23		
										SDG44098			13		
										SDG43825			19		
										SDG43574			15		
										SDG43576			18		
										SDG46417			14		

Sl.no	Name of Division	Name of PSS	Voltage Level	Name Out going 11 KV feeder	Distribution Transformer Capacity in KVA/11KV Bulk Consumer	Distribution Transformer Location-Code/Bulk Consumer Location.	A	B	C=B-A		D	E	F=E-D	G=C-∑F	
							Initial meter reading at LT side of DTR (LU)	Final meter reading at LT side of DTR (LU)	Energy consumption at destination end during interval in LU.	Consumer ID no/Meter no	Initial meter reading at Consumer side (U)	Final meter reading at consumer side (U)	Energy consumption at destination end during interval in Unit.	LT with Commercial loss in LU	% of LT loss w.r.t Input energy
										SDG46413			13		
										SDG45954			3		
										SDG33606			18		
										SDG33654			29		
										SDG33648			20		
										SDG33604			6		
										SDG33605			17		
										SDG33646			3		
										SDG33636			10		
										SDG35066			56		
										SDG35062			15		
										SDG35061			39		
										SDG35145			30		
										SDG35097			27		
										SDG35258			33		
										SDG34803			51		
										SDG34403			15		
										SDG34868			27		
										SDG34401			8		
										SDG34402			3		
										SDG34400			14		
										SDG34404			18		
										SDG34406			37		
										SDG33686			33		
										SDG34405			10		
										SDG33697			11		
										SDG34398			30		
										SDG33732			9		
										SDG39423			3		
										SDG39421			31		
										SDG38981			9		
										SDG38622			11		
										SDG38772			28		
										SDG38640			27		
										SDG38547			63		
										SDG38405			61		
										SDG38509			32		
										SDG38132			3		

Sl.no	Name of Division	Name of PSS	Voltage Level	Name Out going 11 KV feeder	Distribution Transformer Capacity in KVA/11KV Bulk Consumer	Distribution Transformer Location-Code/Bulk Consumer Location.	A	B	C=B-A		D	E	F=E-D	G=C-∑F	
							Initial meter reading at LT side of DTR (LU)	Final meter reading at LT side of DTR (LU)	Energy consumption at destination end during interval in LU.	Consumer ID no/Meter no	Initial meter reading at Consumer side (U)	Final meter reading at consumer side (U)	Energy consumption at destination end during interval in Unit.	LT with Commercial loss in LU	% of LT loss w.r.t Input energy
										SDG38056			16		
										SDG37922			16		
										SDG37877			11		
										SDG37882			15		
										SDG37923			12		
										SDG37975			15		
										SDG38063			31		
										SDG35381			21		
										SDG35102			5		
										SDG42179			37		
										SDG42185			19		
										SDG42544			18		
										SDG42543			14		
										SDG42540			13		
										SDG41467			19		
										SDG41495			32		
										SDG40347			6		
										SDG40350			2		
										SDG40356			20		
										SDG40357			2		
										SDG39638			48		
										SDG39686			5		
										SDG39914			11		
										SDG39954			19		
										SDG40022			36		
										SDG32075			13		
										SDG32058			28		
										SDG32071			19		
										SDG32181			24		
										SDG30053			5		
										SDG33615			10		
										SDG2304			14		
										SDG32144			22		
										SDG32168			31		
										SDG27243			13		
										SDG32182			18		
										SDG34642			25		
										SDG34651			34		

Sl.no	Name of Division	Name of PSS	Voltage Level	Name Out going 11 KV feeder	Distribution Transformer Capacity in KVA/11KV Bulk Consumer	Distribution Transformer Location-Code/Bulk Consumer Location.	A	B	C=B-A		D	E	F=E-D	G=C-∑F	
							Initial meter reading at LT side of DTR (LU)	Final meter reading at LT side of DTR (LU)	Energy consumption at destination end during interval in LU.	Consumer ID no/Meter no	Initial meter reading at Consumer side (U)	Final meter reading at consumer side (U)	Energy consumption at destination end during interval in Unit.	LT with Commercial loss in LU	% of LT loss w.r.t Input energy
										SDG34687			58		
										SDG34491			20		
										SDG34469			49		
										SDG34552			30		
										SDG34597			2		
										SDG34598			5		
										SDG34541			14		
										SDG37140			13		
										SDG37150			32		
										SDG37101			25		
										SDG37061			11		
										SDG36996			0		
										SDG37008			18		
										SDG37006			19		
										SDG37007			47		
										SDG37483			3		
										SDG37580			15		
										SDG37489			2		
										SDG37515			21		
										SDG37516			11		
										SDG37847			58		
										SDG37821			76		
										SDG37848			1		
										SDG37846			50		
										SDG37870			43		
										SDG36573			0		
										SDG36531			16		
										SDG36040			22		
										SDG36042			3		
										SDG36043			6		
										SDG35970			13		
										SDG35893			27		
										SDG36012			21		
										SDG36011			19		
										SDG36159			7		
										SDG36637			28		
										SDG36599			12		
										SDG36594			33		

Sl.no	Name of Division	Name of PSS	Voltage Level	Name Out going 11 KV feeder	Distribution Transformer Capacity in KVA/11KV Bulk Consumer	Distribution Transformer Location-Code/Bulk Consumer Location.	A	B	C=B-A		D	E	F=E-D	G=C-∑F	
							Initial meter reading at LT side of DTR (LU)	Final meter reading at LT side of DTR (LU)	Energy consumption at destination end during interval in LU.	Consumer ID no/Meter no	Initial meter reading at Consumer side (U)	Final meter reading at consumer side (U)	Energy consumption at destination end during interval in Unit.	LT with Commercial loss in LU	% of LT loss w.r.t Input energy
										SDG36583			4		
										SDG36591			25		
										SDG36647			54		
										SDG36636			12		
										SDG36638			28		
										SDG36676			3		
										SDG36847			5		
										SDG36911			7		
										SDG35538			3		
										SDG35440			7		
										SDG35166			20		
										SDG35520			26		
										SDG35561			40		
										SDG35663			65		
										SDG35684			34		
										SDG23052			125		
										SDG23053			71		
										SDG26479			42		
										SDG15491			12		
										SDG29992			7		
										SDG29941			38		
										SDG27475			65		
										SDG2363			74		
										SDG24934			53		
										SDG27476			13		
										SDG26741			11		
										SDG26761			21		
										SDG27430			31		
										SDG26750			21		
										SDG31280			82		
										SDG2695			36		
										SDG2852			20		
										SDG2563			12		
										SDG2562			40		
										SDG2974			14		
										SDG22066			44		
										SDG24929			12		
										SDG22543			2		

Sl.no	Name of Division	Name of PSS	Voltage Level	Name Out going 11 KV feeder	Distribution Transformer Capacity in KVA/11KV Bulk Consumer	Distribution Transformer Location-Code/Bulk Consumer Location.	A	B	C=B-A		D	E	F=E-D	G=C-∑F	
							Initial meter reading at LT side of DTR (LU)	Final meter reading at LT side of DTR (LU)	Energy consumption at destination end during interval in LU.	Consumer ID no/Meter no	Initial meter reading at Consumer side (U)	Final meter reading at consumer side (U)	Energy consumption at destination end during interval in Unit.	LT with Commercial loss in LU	% of LT loss w.r.t Input energy
										SDG22088			18		
										SDG22059			32		
										SDG2670			19		
										SDG1791			22		
										SDG2613			5		
										SDG2331			29		
										SDG2634			21		
										SDG2728			87		
										SDG18483			50		
										SDG23329			6		
										SDG26740			4		
										SDG22559			57		
										SDG22558			47		
										SDG22557			13		
										SDG22556			37		
										SDG27482			75		
										SDG22541			86		
										SDG30055			27		
										SDG30054			45		
										SDG28989			43		
										SDG27427			31		
										SDG22071			50		
										SDG18136			74		
										SDG27358			24		
										SDG27125			27		
										SDG28905			55		
										SDG26756			28		
										SDG23984			68		
										SDG18367			55		
										SDG28906			91		
										SDG15486			84		
										SDG22054			39		
										SDG23991			34		
										SDG15412			34		
										SDG17861			90		
										SDG2969			34		
										SDG2475			0		
										SDG2094			77		

Sl.no	Name of Division	Name of PSS	Voltage Level	Name Out going 11 KV feeder	Distribution Transformer Capacity in KVA/11KV Bulk Consumer	Distribution Transformer Location-Code/Bulk Consumer Location.	A	B	C=B-A		D	E	F=E-D	G=C-∑F	
							Initial meter reading at LT side of DTR (LU)	Final meter reading at LT side of DTR (LU)	Energy consumption at destination end during interval in LU.	Consumer ID no/Meter no	Initial meter reading at Consumer side (U)	Final meter reading at consumer side (U)	Energy consumption at destination end during interval in Unit.	LT with Commercial loss in LU	% of LT loss w.r.t Input energy
										SDG1790			39		
										SDG17803			41		
										SDG17801			28		
										SDG23806			79		
										SDG23323			68		
										SDG17802			32		
										SDG23324			28		
										SDG24980			23		
										SDG22566			12		
										SDG18753			32		
										SDG17944			23		
										SDG15407			28		
										SDG26353			23		
										SDG15483			12		
										SDG26757			27		
										SDG23801			57		
										SDG22563			29		
										SDG22565			56		
										SDG26711			39		
										SDG22564			33		
										SDG24992			16		
										SDG23328			60		
										SDG23327			96		
										SDG26726			56		
										SDG31741			57		
										SDG31742			82		
										SDG26378			38		
										SDG22561			98		
										SDG22560			11		
										SDG26730			33		
										SDG26759			18		
										SDG22562			72		
										SDG23330			41		
										SDG26762			47		
										SDG31785			67		
										SDG29928			53		
										SDG29929			35		
										SDG29927			47		

Sl.no	Name of Division	Name of PSS	Voltage Level	Name Out going 11 KV feeder	Distribution Transformer Capacity in KVA/11KV Bulk Consumer	Distribution Transformer Location-Code/Bulk Consumer Location.	A	B	C=B-A		D	E	F=E-D	G=C-∑F	
							Initial meter reading at LT side of DTR (LU)	Final meter reading at LT side of DTR (LU)	Energy consumption at destination end during interval in LU.	Consumer ID no/Meter no	Initial meter reading at Consumer side (U)	Final meter reading at consumer side (U)	Energy consumption at destination end during interval in Unit.	LT with Commercial loss in LU	% of LT loss w.r.t Input energy
										SDG26482			76		
										SDG26436			43		
										SDG29930			63		
										SDG2778			58		
										SDG2780			67		
										SDG2779			39		
										SDG2766			50		
										SDG2646			52		
										SDG26534			97		
										SDG1812			59		
										SDG19610			33		
										SDG31796			35		
										SDG31798			52		
										SDG26385			66		
Sub-Total 9													**7,774**		
Chikkodi Division Total [Sub-Total 1 to 9]									**0.82**	**LT Line + Commercial Loss in LU**				**0.115**	**14.071**
Total Input Energy of DTR of Chikkodi Circle in LU (11 kV side Input Energy - 11 kV Line Loss)									**1103.05**	**Total LT + Commercial Loss w.r.t. DTR Input Energy in Chikkodi Circle in LU**				**155.213**	**14.071**
Chikkodi Circle 11 kV side Input Energy									**1164.28**	**Total LT+ Commercial Loss w.r.t. 11 kV side Input Energy in Chikkodi Circle in LU**				**155.213**	**13.331**

COMMERCIAL LOSS DUE TO DEFECTIVE METER OF BANGLORE SOUTH CIRCLE IN KARNATAKA STATE

E. COMMERCIAL LOSS DUE TO DEFECTIVE METER OF BANGALORE SOUTH CIRCLE

Sl. No.	Consumer	Meter No. / ID No.	Consumption as per Field Survey	As per Billing Record of B'lore South Circle	
				Type of Billing	Unit Consumed (U)
1	Consumer-1	1SH13280	557	Deffective Meter Billing	442
2	Consumer-2	1SH13281	177	Deffective Meter Billing	110
3	Consumer-3	1SH13711	287	Deffective Meter Billing	253
4	Consumer-4	1SH14756	298	Deffective Meter Billing	275
5	Consumer-5	1SH15027	254	Deffective Meter Billing	227
6	Consumer-6	1SH1847	154	Deffective Meter Billing	90
7	Consumer-7	1SH20178	265	Deffective Meter Billing	206
8	Consumer-8	1SH20179	389	Deffective Meter Billing	325
9	Consumer-9	1SH2319	487	Deffective Meter Billing	452
10	Consumer-10	1SH24011	287	Deffective Meter Billing	302
11	Consumer-11	1SH24109	283	Deffective Meter Billing	258
12	Consumer-12	1SH25989	165	Deffective Meter Billing	127
13	Consumer-13	1SH27308	254	Deffective Meter Billing	231
14	Consumer-14	1SH27375	292	Deffective Meter Billing	202
15	Consumer-15	1SH27401	165	Deffective Meter Billing	136
16	Consumer-16	1SH27927	176	Deffective Meter Billing	151
17	Consumer-17	1SH2793	191	Deffective Meter Billing	132
18	Consumer-18	1SH28471	185	Deffective Meter Billing	127
19	Consumer-19	1SH28576	428	Deffective Meter Billing	399
20	Consumer-20	1SH29278	774	Deffective Meter Billing	652
21	Consumer-21	1SH2967	196	Deffective Meter Billing	175
22	Consumer-22	1SH30739	782	Deffective Meter Billing	661
23	Consumer-23	1SH31725	301	Deffective Meter Billing	248
24	Consumer-24	1SH31726	246	Deffective Meter Billing	200
25	Consumer-25	1SH31727	159	Deffective Meter Billing	105
TOTAL			**7752**		**6486**

a.	Consumption as per Field Survey (U)	7752
b.	As per Billing Record of the Bangalore South Circle (U)	6486
c.	Loss due to Defective Meter Billing (U)	1266
d.	% of Loss w.r.t. Billing Record of the Bangalore South Circle	19.519
e.	Toal No. of Consumer	1270401
f.	Total Defective Meter Consumer	3430
g.	% of Defective Meter w.r.t. Total Consumer	0.27
h.	Total Billing in MU	371.6
i.	Total Input in MU (11 kV Level)	423.9
j.	Total Billing due to Defective Meter in MU (considering equal % of Billing)	1.0033
k.	Total Loss due to Defective Meter Billing in MU	0.1958
l.	% of Loss w.r.t. Input Energy	0.0462

COMMERCIAL LOSS DUE TO DEFECTIVE METER OF HUBLI CIRCLE IN KARNATAKA STATE

STUDY ON COMPONENT-WISE AT&C LOSSES ASSESSMENT FOR THE STATE OF KARNATAKA

F. COMMERCIAL LOSS DUE TO DEFECTIVE METER OF HUBLI CIRCLE

Sl. No.	Consumer	Meter No. / ID No.	Consumption as per Field Survey	As per Billing Record of the HESCOM	
				Type of Billing	Unit Consumed (U)
1	Consumer-1	R10122A	285	Deffective Meter Billing	273
2	Consumer-2	R10612	423	Deffective Meter Billing	397
3	Consumer-3	R11385A	465	Deffective Meter Billing	445
4	Consumer-4	R11386A	185	Deffective Meter Billing	157
5	Consumer-5	R11387A	243	Deffective Meter Billing	224
6	Consumer-6	R11388A	263	Deffective Meter Billing	222
7	Consumer-7	R11389A	353	Deffective Meter Billing	332
8	Consumer-8	R11390A	184	Deffective Meter Billing	160
9	Consumer-9	R11391A	137	Deffective Meter Billing	115
10	Consumer-10	R11392A	149	Deffective Meter Billing	136
11	Consumer-11	R11393A	142	Deffective Meter Billing	117
12	Consumer-12	R11394A	175	Deffective Meter Billing	157
13	Consumer-13	R11395A	347	Deffective Meter Billing	335
14	Consumer-14	R11396A	153	Deffective Meter Billing	139
15	Consumer-15	R11397A	144	Deffective Meter Billing	133
16	Consumer-16	R11398A	167	Deffective Meter Billing	115
17	Consumer-17	R11399A	231	Deffective Meter Billing	216
18	Consumer-18	R11400A	153	Deffective Meter Billing	136
19	Consumer-19	R11401A	143	Deffective Meter Billing	130
20	Consumer-20	R11402A	221	Deffective Meter Billing	207
21	Consumer-21	R11403A	184	Deffective Meter Billing	165
22	Consumer-22	R11404A	279	Deffective Meter Billing	266
23	Consumer-23	R11405A	189	Deffective Meter Billing	174
24	Consumer-24	R11406A	316	Deffective Meter Billing	287
25	Consumer-25	R11407A	264	Deffective Meter Billing	235
TOTAL			**5795**		**5273**

a.	Consumption as per Field Survey (U)	5795
b.	As per Billing Record of the Hubli Circle (U)	5273
c.	Loss due to Defective Meter Billing (U)	522
d.	% of Loss w.r.t. Billing Record of the Hubli Circle	9.899
e.	Toal No. of Consumer	656392
f.	Total Defective Meter Consumer	4532
g.	% of Defective Meter w.r.t. Total Consumer	0.69
h.	Total Billing in MU	83.507
i.	Total Input in MU (11 kV Level)	1138.094
j.	Total Billing due to Defective Meter in MU (considering equal % of Billing)	0.576
k.	Total Loss due to Defective Meter Billing in MU	0.057
l.	% of Loss w.r.t. Input Energy	0.005

COMMERCIAL LOSS DUE TO DEFECTIVE METER OF GULBERGA CIRCLE IN KARNATAKA STATE

STUDY ON COMPONENT-WISE AT&C LOSSES ASSESSMENT FOR THE STATE OF KARNATAKA

F. COMMERCIAL LOSS DUE TO DEFECTIVE METER OF GULBARGA CIRCLE

Sl. No.	Consumer	Meter No. / ID No.	Consumption as per Field Survey	As per Billing Record of Gulbarga Circle	
				Type of Billing	Unit Consumed (U)
1	Consumer-1	58390	230	Deffective Meter Billing	219
2	Consumer-2	58391	469	Deffective Meter Billing	443
3	Consumer-3	58405	310	Deffective Meter Billing	236
4	Consumer-4	58406	54	Deffective Meter Billing	34
5	Consumer-5	58408	254	Deffective Meter Billing	236
6	Consumer-6	58409	175	Deffective Meter Billing	166
7	Consumer-7	58410	540	Deffective Meter Billing	441
8	Consumer-8	58411	102	Deffective Meter Billing	54
9	Consumer-9	58412	110	Deffective Meter Billing	60
10	Consumer-10	58413	604	Deffective Meter Billing	543
11	Consumer-11	58414	420	Deffective Meter Billing	376
12	Consumer-12	58415	134	Deffective Meter Billing	123
13	Consumer-13	58416	50	Deffective Meter Billing	27
14	Consumer-14	58417	468	Deffective Meter Billing	443
15	Consumer-15	58418	353	Deffective Meter Billing	323
16	Consumer-16	58455	287	Deffective Meter Billing	235
17	Consumer-17	58456	123	Deffective Meter Billing	102
18	Consumer-18	58457	257	Deffective Meter Billing	216
19	Consumer-19	58458	52	Deffective Meter Billing	40
20	Consumer-20	58459	189	Deffective Meter Billing	152
21	Consumer-21	58460	453	Deffective Meter Billing	371
22	Consumer-22	58461	745	Deffective Meter Billing	637
23	Consumer-23	58462	287	Deffective Meter Billing	247
24	Consumer-24	58463	286	Deffective Meter Billing	271
25	Consumer-25	58477	206	Deffective Meter Billing	195
26	Consumer-26	58478	287	Deffective Meter Billing	253
27	Consumer-27	58479	489	Deffective Meter Billing	457
28	Consumer-28	58480	147	Deffective Meter Billing	136
29	Consumer-29	58482	168	Deffective Meter Billing	113
30	Consumer-30	58487	136	Deffective Meter Billing	116
TOTAL			**8385**		**7265**

a.	Consumption as per Field Survey	8385
b.	As per Billing Record of Gulbarga Circle	7265
c.	Loss due to Defective Meter Billing	1120
d.	% of Loss w.r.t. Billing Record of Gulbarga Circle	15.416
e.	Total No. of Consumer	715642
f.	Total Defective Meter Consumer	8051
g.	% of Defective Meter w.r.t. Total Consumer	1.125
h.	Total Billing in MU	91.845
i.	Total Input in MU (33 kV Level)	123.305
j.	Total Billing due to Defective Meter in MU (considering equal % of Billing)	1.033
k.	Total Loss due to Defective Meter Billing	0.159
l.	% of Loss w.r.t. Input Energy	0.129

COMMERCIAL LOSS DUE TO DEFECTIVE METER OF CHIKKODI CIRCLE IN KARNATAKA STATE

STUDY ON COMPONENT-WISE AT&C LOSSES ASSESSMENT FOR THE STATE OF KARNATAKA

F. COMMERCIAL LOSS DUE TO DEFFECTIVE METER OF CHIKKODI CIRCLE

Sl. No.	Consumer	Meter No. / ID No.	Consumption as per Field Survey	As per Billing Record of the CESCOM	
				Type of Billing	Unit Consumed (U)
1	Consumer-1	296841846	34	Deffective Meter Billing	14
2	Consumer-2	2596841830	613	Deffective Meter Billing	542
3	Consumer-3	2217841058	157	Deffective Meter Billing	136
4	Consumer-4	6696841868	324	Deffective Meter Billing	275
5	Consumer-5	1996841925	89	Deffective Meter Billing	66
6	Consumer-6	8517841043	63	Deffective Meter Billing	16
7	Consumer-7	1796841861	66	Deffective Meter Billing	35
8	Consumer-8	5328841128	19	Deffective Meter Billing	4
9	Consumer-9	6908841055	189	Deffective Meter Billing	157
10	Consumer-10	3508841978	97	Deffective Meter Billing	71
11	Consumer-11	6408841939	286	Deffective Meter Billing	217
12	Consumer-12	6228841159	476	Deffective Meter Billing	414
13	Consumer-13	518841004	87	Deffective Meter Billing	42
14	Consumer-14	4008841964	357	Deffective Meter Billing	324
15	Consumer-15	6008841994	45	Deffective Meter Billing	8
16	Consumer-16	1008841910	37	Deffective Meter Billing	17
17	Consumer-17	5229841148	214	Deffective Meter Billing	184
18	Consumer-18	9809841939	73	Deffective Meter Billing	28
19	Consumer-19	4178841661	858	Deffective Meter Billing	824
20	Consumer-20	3809841959	46	Deffective Meter Billing	13
21	Consumer-21	9219841000	34	Deffective Meter Billing	13
22	Consumer-22	9819841059	293	Deffective Meter Billing	285
23	Consumer-23	8329841117	301	Deffective Meter Billing	276
24	Consumer-24	3219841051	468	Deffective Meter Billing	444
25	Consumer-25	3719841032	165	Deffective Meter Billing	128
26	Consumer-26	9119841059	157	Deffective Meter Billing	138
27	Consumer-27	9929841238	368	Deffective Meter Billing	314
28	Consumer-28	8039841217	109	Deffective Meter Billing	63
TOTAL			**6025**		**5048**

a.	Consumption as per Field Survey	6025
b.	As per Billing Record of the CESCOM	5048
c.	Loss due to Deffective Meter Billing	977
d.	% of Loss w.r.t. Billing Record of the CESCOM	16.216
e.	Toal No. of Consumer	405834
f.	Total Deffective Meter Consumer	1864
g.	% of Deffective Meter w.r.t. Total Consumer	0.460
h.	Total Billing in MU	90.204
i.	Total Input in MU (11 kV Level)	116.428
j.	Total Billing due to Deffective Meter in MU (considering equal % of Billing)	0.415
k.	Total Loss due to Deffective Meter Billing	0.067
l.	% of Loss w.r.t. Input Energy	0.058

COMMERCIAL LOSS DUE TO NON-AVAILABILITY OF METER/ UNMETERED CONSUMER OF BANGLORE SOUTH CIRCLE IN KARNATAKA STATE

STUDY ON COMPONENT-WISE AT&C LOSSES ASSESSMENT FOR THE STATE OF KARNATAKA

F. COMMERCIAL LOSS DUE TO NON-AVAILABILITY OF OF METER/ UNMETERED CONSUMER OF BANGALORE SOUTH CIRCLE

Sl. No.	Consumer	Meter No. / ID No.	Consumption as per Field Survey	As per Billing Record of Bangalore South Circle	
				Type of Billing	Unit Consumed (U)
1	Consumer-1	1S21927	54	Provisional Billing for Un-metered Consumer	30
2	Consumer-2	1S26499	287	Provisional Billing for Un-metered Consumer	244
3	Consumer-3	1S27839	85	Provisional Billing for Un-metered Consumer	56
4	Consumer-4	1S49806	67	Provisional Billing for Un-metered Consumer	57
5	Consumer-5	1S50090	1159	Provisional Billing for Un-metered Consumer	968
6	Consumer-6	1S53609	1525	Provisional Billing for Un-metered Consumer	1398
7	Consumer-7	1S54252	235	Provisional Billing for Un-metered Consumer	225
8	Consumer-8	1S54253	157	Provisional Billing for Un-metered Consumer	145
9	Consumer-9	1S54293	149	Provisional Billing for Un-metered Consumer	121
10	Consumer-10	1S55025	152	Provisional Billing for Un-metered Consumer	112
11	Consumer-11	1S56716	391	Provisional Billing for Un-metered Consumer	326
12	Consumer-12	1S56717	126	Provisional Billing for Un-metered Consumer	105
13	Consumer-13	1S56718	243	Provisional Billing for Un-metered Consumer	220
14	Consumer-14	1S58004	67	Provisional Billing for Un-metered Consumer	54
15	Consumer-15	1S58005	128	Provisional Billing for Un-metered Consumer	110
16	Consumer-16	1S58006	164	Provisional Billing for Un-metered Consumer	178
17	Consumer-17	1S58007	54	Provisional Billing for Un-metered Consumer	43
18	Consumer-18	1S58008	206	Provisional Billing for Un-metered Consumer	192
19	Consumer-19	1S58009	89	Provisional Billing for Un-metered Consumer	65
20	Consumer-20	1S58010	187	Provisional Billing for Un-metered Consumer	114
21	Consumer-21	1S58011	267	Provisional Billing for Un-metered Consumer	228
22	Consumer-22	1S61734	391	Provisional Billing for Un-metered Consumer	250
23	Consumer-23	1S62065	38	Provisional Billing for Un-metered Consumer	18
24	Consumer-24	1S62078	83	Provisional Billing for Un-metered Consumer	27
25	Consumer-25	1S922	61	Provisional Billing for Un-metered Consumer	48
TOTAL			**6365**		**5334**

a.	Consumption as per Field Survey (U)	6365
b.	As per Billing Record of the Bangalore South Circle (U)	5334
c.	Loss due to Un-metered Consumer & Others Billing (U)	1031
d.	% of Loss w.r.t. Billing Record of the Bangalore South Circle	19.329
e.	Toal No. of Consumer	1270401
f.	Total Un-metered Consumer & Others	139
g.	% of Un-metered Consumer & Others w.r.t. Total meter	0.011
h.	Total Billing in MU	371.60
i.	Total Input in MU (11 kV Level)	423.90
j.	Total Billing due to Un-metered Consumer & Others in MU (considering equal % of Billing)	0.041
k.	Total Loss due to Un-metered Consumer & Others Billing in MU	0.008
l.	% of Loss w.r.t. Input Energy	0.002

COMMERCIAL LOSS DUE TO NON-AVAILABILITY OF METER/ UNMETERED CONSUMER OF HUBLI CIRCLE IN KARNATAKA STATE

STUDY ON COMPONENT-WISE AT&C LOSSES ASSESSMENT FOR THE STATE OF KARNATAKA

G. COMMERCIAL LOSS DUE TO NON-AVAILABILITY OF OF METER/ UNMETERED CONSUMER OF HUBLI CIRCLE

Sl. No.	Consumer	Meter No. / ID No.	Consumption as per Field Survey	As per Billing Record of the HESCOM	
				Type of Billing	Unit Consumed (kWh)
1	Consumer-1	R11409A	54	Provisional Billing for Un-metered Consumer	25
2	Consumer-2	R11475A	42	Provisional Billing for Un-metered Consumer	25
3	Consumer-3	R11486A	34	Provisional Billing for Un-metered Consumer	25
4	Consumer-4	R13485C	38	Provisional Billing for Un-metered Consumer	25
5	Consumer-5	R13766C	54	Provisional Billing for Un-metered Consumer	25
6	Consumer-6	R139C	44	Provisional Billing for Un-metered Consumer	25
7	Consumer-7	R16255C	65	Provisional Billing for Un-metered Consumer	25
8	Consumer-8	R16264C	43	Provisional Billing for Un-metered Consumer	25
9	Consumer-9	R16925	19	Provisional Billing for Un-metered Consumer	25
10	Consumer-10	R20185	13	Provisional Billing for Un-metered Consumer	25
11	Consumer-11	R20973C	47	Provisional Billing for Un-metered Consumer	25
12	Consumer-12	R20974C	124	Provisional Billing for Un-metered Consumer	65
13	Consumer-13	R20975C	116	Provisional Billing for Un-metered Consumer	65
14	Consumer-14	R21578	118	Provisional Billing for Un-metered Consumer	65
15	Consumer-15	R234C	134	Provisional Billing for Un-metered Consumer	65
16	Consumer-16	R23675C	85	Provisional Billing for Un-metered Consumer	65
17	Consumer-17	R23676C	78	Provisional Billing for Un-metered Consumer	65
18	Consumer-18	R23677C	113	Provisional Billing for Un-metered Consumer	65
19	Consumer-19	R2456	114	Provisional Billing for Un-metered Consumer	65
20	Consumer-20	R30014C	154	Provisional Billing for Un-metered Consumer	65
21	Consumer-21	R304552C	163	Provisional Billing for Un-metered Consumer	65
22	Consumer-22	R304914C	89	Provisional Billing for Un-metered Consumer	65
23	Consumer-23	R304915C	34	Provisional Billing for Un-metered Consumer	65
24	Consumer-24	R304916A	32	Provisional Billing for Un-metered Consumer	65
25	Consumer-25	R304917A	106	Provisional Billing for Un-metered Consumer	65
26	Consumer-26	R304918A	119	Provisional Billing for Un-metered Consumer	85
27	Consumer-27	R304919A	132	Provisional Billing for Un-metered Consumer	85
28	Consumer-28	R304920	114	Provisional Billing for Un-metered Consumer	85
29	Consumer-29		120	Provisional Billing for Un-metered Consumer	85
30	Consumer-30		39	Provisional Billing for Un-metered Consumer	85
TOTAL			**2437**		**1610**

a.	Consumption as per Field Survey (U)	2437
b.	As per Billing Record of the Hubli Circle (U)	1610
c.	Loss due to Un-metered Consumer & Others Billing (U)	827
d.	% of Loss w.r.t. Billing Record of the Hunli Circle	51.366
e.	Toal No. of Consumer	656392
f.	Total Un-metered Consumer & Others	53955
g.	% of Un-metered Consumer & Others w.r.t. Total meter	8.22
h.	Total Billing in MU	83.50676
i.	Total Input in MU (11 kV Level)	1138.094
j.	Total Billing due to Un-metered Consumer & Others in MU (considering equal % of Billing)	6.864256
k.	Total Loss due to Un-metered Consumer & Others Billing in MU	3.525894
l.	% of Loss w.r.t. Input Energy	0.309807

COMMERCIAL LOSS DUE TO NON-AVAILABILITY OF METER/ UNMETERED CONSUMER OF GULBERGA CIRCLE IN KARNATAKA STATE

STUDY ON COMPONENT-WISE AT&C LOSSES ASSESSMENT FOR THE STATE OF KARNATAKA

G. COMMERCIAL LOSS DUE TO NON-AVAILABILITY OF OF METER/ UNMETERED CONSUMER OF GULBARGA CIRCLE

Sl. No.	Consumer	Meter No. / ID No.	Consumption as per Field Survey	As per Billing Record of the GESCOM	
				Type of Billing	Unit Consumed (U)
1	Consumer-1	55589	125	Provisional Billing for Un-metered Consumer	84
2	Consumer-2	55627	114	Provisional Billing for Un-metered Consumer	58
3	Consumer-3	46644	43	Provisional Billing for Un-metered Consumer	14
4	Consumer-4	49914	19	Provisional Billing for Un-metered Consumer	30
5	Consumer-5	51305	25	Provisional Billing for Un-metered Consumer	46
6	Consumer-6	53979	205	Provisional Billing for Un-metered Consumer	177
7	Consumer-7	56063	54	Provisional Billing for Un-metered Consumer	34
8	Consumer-8	46026	76	Provisional Billing for Un-metered Consumer	56
9	Consumer-9	46053	35	Provisional Billing for Un-metered Consumer	25
10	Consumer-10	46105	43	Provisional Billing for Un-metered Consumer	26
11	Consumer-11	46129	117	Provisional Billing for Un-metered Consumer	80
12	Consumer-12	46215	119	Provisional Billing for Un-metered Consumer	92
13	Consumer-13	46242	35	Provisional Billing for Un-metered Consumer	17
14	Consumer-14	46286	54	Provisional Billing for Un-metered Consumer	18
15	Consumer-15	46416	56	Provisional Billing for Un-metered Consumer	36
16	Consumer-16	46838	43	Provisional Billing for Un-metered Consumer	11
17	Consumer-17	49048	39	Provisional Billing for Un-metered Consumer	21
18	Consumer-18	49113	76	Provisional Billing for Un-metered Consumer	49
19	Consumer-19	49169	34	Provisional Billing for Un-metered Consumer	15
20	Consumer-20	49363	37	Provisional Billing for Un-metered Consumer	16
21	Consumer-21	49364	65	Provisional Billing for Un-metered Consumer	31
22	Consumer-22	49380	24	Provisional Billing for Un-metered Consumer	10
23	Consumer-23	49556	45	Provisional Billing for Un-metered Consumer	19
24	Consumer-24	49680	117	Provisional Billing for Un-metered Consumer	67
25	Consumer-25	49685	65	Provisional Billing for Un-metered Consumer	40
26	Consumer-26	50051	34	Provisional Billing for Un-metered Consumer	40
27	Consumer-27	50052	31	Provisional Billing for Un-metered Consumer	40
28	Consumer-28	53423	25	Provisional Billing for Un-metered Consumer	12
29	Consumer-29	53910	19	Provisional Billing for Un-metered Consumer	15
30	Consumer-30	53931	26	Provisional Billing for Un-metered Consumer	18
TOTAL			**1800**		**1197**

a.	Consumption as per Field Survey	1800
b.	As per Billing Record of the GESCOM	1197
c.	Loss due to Un-metered Consumer & Others Billing	603
d.	% of Loss w.r.t. Billing Record of the GESCOM	50.376
e.	Toal No. of Consumer	715642
f.	Total Un-metered Consumer & Others	115791
g.	% of Un-metered Consumer & Others w.r.t. Total meter	16.18
h.	Total Billing in MU	91.84512
i.	Total Input in MU (33 kV Level)	1233.046
j.	Total Billing due to Un-metered Consumer & Others in MU (considering equal % of Billing)	14.86054
k.	Total Loss due to Un-metered Consumer & Others Billing	7.486146
l.	% of Loss w.r.t. Input Energy	0.607

COMMERCIAL LOSS DUE TO NON-AVAILABILITY OF METER/ UNMETERED CONSUMER OF CHIKKODI CIRCLE IN KARNATAKA STATE

STUDY ON COMPONENT-WISE AT&C LOSSES ASSESSMENT FOR THE STATE OF KARNATAKA

G. COMMERCIAL LOSS DUE TO NON-AVAILABILITY OF OF METER/ UNMETERED CONSUMER OF CHIKKODI CIRCLE

Sl. No.	Consumer	Meter No. / ID No.	Consumption as per Field Survey	As per Billing Record of the CESCOM	
				Type of Billing	Unit Consumed (U)
1	Consumer-1	5129841123	62	Provisional Billing for Un-metered Consumer	40
2	Consumer-2	6029841137	85	Provisional Billing for Un-metered Consumer	40
3	Consumer-3	7129841122	55	Provisional Billing for Un-metered Consumer	40
4	Consumer-4	2319841014	87	Provisional Billing for Un-metered Consumer	40
5	Consumer-5	8909841052	96	Provisional Billing for Un-metered Consumer	40
6	Consumer-6	519841006	78	Provisional Billing for Un-metered Consumer	40
7	Consumer-7	2110941099	69	Provisional Billing for Un-metered Consumer	40
8	Consumer-8	1310941022	114	Provisional Billing for Un-metered Consumer	40
9	Consumer-9	121941170	128	Provisional Billing for Un-metered Consumer	40
10	Consumer-10	6121941138	130	Provisional Billing for Un-metered Consumer	40
11	Consumer-11	9701941920	114	Provisional Billing for Un-metered Consumer	40
12	Consumer-12	5911941167	25	Provisional Billing for Un-metered Consumer	40
13	Consumer-13	5315841002	117	Provisional Billing for Un-metered Consumer	60
14	Consumer-14	5715841030	110	Provisional Billing for Un-metered Consumer	60
15	Consumer-15	7994841992	119	Provisional Billing for Un-metered Consumer	60
16	Consumer-16	8494841895	126	Provisional Billing for Un-metered Consumer	60
17	Consumer-17	6196841893	35	Provisional Billing for Un-metered Consumer	60
18	Consumer-18	3107841968	117	Provisional Billing for Un-metered Consumer	60
19	Consumer-19	6717841012	145	Provisional Billing for Un-metered Consumer	60
20	Consumer-20	8496841899	140	Provisional Billing for Un-metered Consumer	60
21	Consumer-21	1207841990	112	Provisional Billing for Un-metered Consumer	80
22	Consumer-22	2107841991	168	Provisional Billing for Un-metered Consumer	80
23	Consumer-23	4007841962	172	Provisional Billing for Un-metered Consumer	80
24	Consumer-24	217841009	117	Provisional Billing for Un-metered Consumer	80
25	Consumer-25	2617841069	135	Provisional Billing for Un-metered Consumer	80
TOTAL			**2656**		**1360**

a.	Consumption as per Field Survey	2656
b.	As per Billing Record of the CESCOM	1360
c.	Loss due to Un-metered Consumer & Others Billing	1296
d.	% of Loss w.r.t. Billing Record of the CESCOM	95.294
e.	Toal No. of Consumer	405834
f.	Total Un-metered Consumer & Others	21301
g.	% of Un-metered Consumer & Others w.r.t. Total meter	5.249
h.	Total Billing in MU	90.2041
i.	Total Input in MU (11 kV Level)	116.43
j.	Total Billing due to Un-metered Consumer & Others in MU (considering equal % of Billing)	4.734813
k.	Total Loss due to Un-metered Consumer & Others Billing	4.511993
l.	% of Loss w.r.t. Input Energy	3.875364

DIVISION-WISE BILLING & COLLECTION OF DATA FOR BANGLORE SOUTH CIRCLE IN KARNATAKA STATE

STUDY ON COMPONENT-WISE AT&C LOSSES ASSESSMENT FOR THE STATE OF KARNATAKA

G) BILLING & COLLECTION DATA DIVISION-WISE FOR BANGLORE SOUTH CIRCLE FOR THE MONTH OF JULY 2013

Sl. No.	Customer Category	Energy Billing (in MU)				Billing (Rs. in Lakhs)				Collection (Rs. in Lakhs)			
		Jayanagar	KML	HSR	Total City Cirle	Jayanagar	KML	HSR	Total City Cirle	Jayanagar	KML	HSR	Total City Cirle
1	Domestic + Commercial + Industrial (LT) + Government + others (Public, Religious, Street Light & Water) including 11 kV Bulk Consumers	171.30	129.63	70.67	**371.60**	11831.78	8953.61	4881.21	**25666.60**	11459.53	8671.92	4727.63	**24859.08**
	TOTAL	**171.30**	**129.63**	**70.67**	**371.60**	**11831.78**	**8953.61**	**4881.21**	**25666.60**	**11459.53**	**8671.92**	**4727.63**	**24859.08**

DIVISION-WISE BILLING & COLLECTION OF DATA FOR HUBLI CIRCLE IN KARNATAKA STATE

STUDY ON COMPONENT-WISE AT&C LOSSES ASSESSMENT FOR THE STATE OF KARNATAKA

H. BILLING & COLLECTION DATA DIVISION-WISE FOR HUBLI CIRCLE FOR THE MONTH OF JULY 2013

Sl. No.	Customer Category	Energy Billing				Billing				Collection			
		(in MU)	(in MU)			(Rs. in Lakhs)				(Rs. in Lakhs)			
		Gadag Division	Dharwad Division	Hubli Division	Total Hubli Cirle	Gadag Division	Dharwad Division	Hubli Division	Total Hubli Cirle	Gadag Division	Dharwad Division	Hubli Division	Total Hubli Cirle
1	11 kV HT Bulk (Centralized as well as De-Centralized)	0.015	0.014	0.020	0.050	0.620	0.844	1.137	2.602	0.619	0.844	1.131	2.593
2	Domestic, Commercial, Industrial (LT), Government & others	25.262	24.128	34.066	83.457	1033.054	1405.901	1894.373	4333.328	1030.497	1406.051	1883.039	4319.588
TOTAL		**25.277**	**24.143**	**34.086**	**83.507**	**1033.675**	**1406.745**	**1895.510**	**4335.930**	**1031.116**	**1406.895**	**1884.170**	**4322.181**

DIVISION-WISE BILLING & COLLECTION OF DATA FOR GULBERGA CIRCLE IN KARNATAKA STATE

STUDY ON COMPONENT-WISE AT&C LOSSES ASSESSMENT FOR THE STATE OF KARNATAKA

H. BILLING & COLLECTION DATA DIVISION WISE FOR GULBARGA CIRCLE FOR THE MONTH OF JULY 2013

Sl. No	Customer Category	Energy Billing					Billing					Collection				
		(in MU)	(in MU)				(Rs. in Lakhs)					(Rs. in Lakhs)				
		Gulbarga-I Division	Gulbarga-II Division	Yadgir Division	Sedem Division	Total Gulbarga Cirle	Gulbarga-I Division	Gulbarga-II Division	Yadgir Division	Sedem Division	Total Gulbarga Cirle	Gulbarga-I Division	Gulbarga-II Division	Yadgir Division	Sedem Division	Total Gulbarga Cirle
1	Domestic, Commercial, Industrial (LT), Government & others (including Bulk Consumers)	37.129	11.949	16.471	26.296	91.845	2061.561	682.039	949.969	1634.319	5327.888	1948.530	547.101	860.651	1526.423	4882.705
	TOTAL	**37.129**	**11.949**	**16.471**	**26.296**	**91.845**	**2061.561**	**682.039**	**949.969**	**1634.319**	**5327.888**	**1948.530**	**547.101**	**860.651**	**1526.423**	**4882.705**

DIVISION-WISE BILLING & COLLECTION OF DATA FOR CHIKKODI CIRCLE IN KARNATAKA STATE

STUDY ON COMPONENT-WISE AT&C LOSSES ASSESSMENT FOR THE STATE OF KARNATAKA

H. BILLING & COLLECTION DATA DIVISION WISE FOR CHIKKODI CIRCLE FOR THE MONTH OF JULY 2013

Sl. No	Customer Category	Energy Billing (in MU)				Billing (Rs. in Lakhs)				Collection (Rs. in Lakhs)			
		Athani	Chikkodi	Raibag	Total	Athani	Chikkodi	Raibag	Total	Athani	Chikkodi	Raibag	Total
1	Domestic + Commercial + Industrial (LT) + Government + others(Public, Religious, Street Light & Water) including Bulk Consumers	28.605	31.459	30.140	**90.204**	1321.532	1498.930	1451.164	**4271.626**	1248.120	1450.525	1439.111	**4137.756**
	TOTAL	**28.605**	**31.459**	**30.140**	**90.204**	**1321.532**	**1498.930**	**1451.164**	**4271.626**	**1248.120**	**1450.525**	**1439.111**	**4137.756**

COMPONENT-WISE AT&C LOSS
OF
BANGLORE SOUTH CIRCLE
IN
KARNATAKA STATE

STUDY ON COMPONENT-WISE AT&C LOSSES ASSESSMENT FOR THE STATE OF KARNATAKA

H) Component-wise AT&C Loss for Bangalore South Circle for the Month of July 2013

Sl. No.	Particulars	Unit	Reading	Description
1	Energy Input	MU	423.90	11 kV Level
2	Metered Energy Sales	MU	371.60	
3	Energy Billed	MU	371.60	
4	Energy Loss in MU	MU	52.30	
5	Revenue Billed	Rs. lac	25666.60	
6	Revenue Collected	Rs. lac	24859.08	Against Billed Amount
7	Billing Efficiency	%	87.66	Metered Energy in MU / Total energy in MU
8	Collection Efficiency	%	96.85	Revenue collected in Rs. Lakh / Revenue billed in Rs. Lakh
9	% of AT&C Losses	%	15.096	[1-(Billing Efficiency x Collection Efficiency)] x100
10	AT&C Loss	MU	63.99	[Energy Loss (MU) + Unrealized Revenue MU)] or (Input Energy x AT&C Loss as wrt Input Energy)
11	Unrealized Revenue	MU	11.69	AT&C Loss in MU - Energy Loss in MU
12	% of Unrealized Revenue w.r.t. Input Energy	%	2.758	
13	11 kV Line Loss	MU	20.26	
14	% 11 kV Line Loss w.r.t. Input Energy	%	4.778	
15	LT Line Loss	MU	23.34	
16	% LT line loss w.r.t. Input Energy	%	5.506	
17	Commercial Loss due to Defective Meter	MU	0.20	
18	% Commercial Loss due to Defective Meter w.r.t. Input Energy	%	0.046	
19	Commercial Loss due to Unmetered & others	MU	0.01	
20	% Commercial Loss due to Unmetered & others w.r.t. Input Energy	%	0.002	
21	Commercial Loss due to theft/ pilferage	MU	8.50	Energy loss- 11 kV line loss - LT line loss-loss due to Unmetered & others - loss due to Defective Meter
22	% of Commercial Loss due to theft/ pilferage w.r.t. Input Energy	%	2.006	

COMPONENT-WISE AT&C LOSS
OF
HUBLI CIRCLE
IN
KARNATAKA STATE

STUDY ON COMPONENT-WISE AT&C LOSSES ASSESSMENT FOR THE STATE OF KARNATAKA

I. Component wise AT&C Loss for Hubli Circle for the Month of July 2013

Sl. No.	Particulars	Unit	Reading	Description
1	Energy Input	MU	113.809	11 kV Level
2	Metered Energy Sales	MU	83.507	
3	Energy Billed	MU	83.507	
4	Energy Loss in MU	MU	30.303	
5	Revenue Billed	Rs. lac	4335.930	
6	Revenue collected	Rs. lac	4322.181	Against Billed Amount
7	Billing Efficiency	%	73.374	Metered Energy in MU / Total energy in MU
8	Collection Efficiency	%	99.683	Revenue collected in Rs. Lakh / Revenue billed in Rs. Lakh
9	% of AT&C Losses	%	26.858	[1-(Billing Efficiency x Collection Efficiency)] x100
10	AT&C Loss	MU	30.567	[Energy Loss (MU) + Unrealized Revenue MU)] or (Input Energy x AT&C Loss as wrt Input Energy)
11	Unrealized Revenue	MU	0.265	AT&C Loss in MU - Energy Loss in MU
12	% of Unrealized Revenue wrt input energy	%	0.233	
13	11 kV line loss	MU	6.64	
14	% 11 kV line loss wrt input energy	%	5.83	
15	LT line loss	MU	10.81	
16	% LT line loss wrt input energy	%	9.502	
17	Commercial loss due to Defective meter	MU	0.057	
18	% Commercial loss due to Defective meter wrt input energy	%	0.050	
19	Commercial loss due to Unmetered & others	MU	3.526	
20	% Commercial loss due to Unmetered & others wrt input energy	%	3.098	
21	Commercial loss due to theft/ pilferage	MU	9.268	Energy loss- 11 kV line loss - LT line loss-loss due to Unmetered & others - loss due to Defective meter
22	% of Commercial loss due to theft/ pilferage w.r.t Input Energy	%	8.143	

COMPONENT-WISE AT&C LOSS
OF
GULBERGA CIRCLE
IN
KARNATAKA STATE

STUDY ON COMPONENT-WISE AT&C LOSSES ASSESSMENT FOR THE STATE OF KARNATAKA

I. COMPONENT-WISE AT&C LOSS FOR GULBARGA CIRCLE FOR THE MONTH OF JULY 2013

Sl. No.	Particulars	Unit	Reading	Description
1	Energy Input	MU	123.305	11 kV Level
2	Metered Energy Sales	MU	91.845	
3	Energy Billed	MU	91.845	
4	Energy Loss in MU	MU	31.460	
5	Revenue Billed	Rs. lac	5327.888	
6	Revenue collected	Rs. lac	4882.705	Against Billed Amount
7	Billing Efficiency	%	74.486	Metered Energy in MU / Total energy in MU
8	Collection Efficiency	%	91.644	Revenue collected in Rs. Lakh / Revenue billed in Rs. Lakh
9	% of AT&C Losses	%	31.737	[1-(Billing Efficiency x Collection Efficiency)] x100
10	AT&C Loss	MU	39.134	[Energy Loss (MU) + Unrealized Revenue MU)] or (Input Energy x AT&C Loss as wrt Input Energy)
11	Unrealized Revenue	MU	7.674	AT&C Loss in MU - Energy Loss in MU
12	% of Unrealized Revenue wrt input energy	%	6.224	
15	11 kV line loss	MU	6.290	
16	% 11 kV line loss wrt input energy	%	5.101	
17	LT line loss	MU	10.708	
18	% LT line loss wrt input energy	%	8.684	
19	Commercial loss due to Defective meter	MU	0.159	
20	% Commercial loss due to Defective meter wrt input energy	%	0.129	
21	Commercial loss due to Unmetered & others	MU	7.486	
22	% Commercial loss due to Unmetered & others wrt input energy	%	6.071	
23	Commercial loss due to theft/ pilferage	MU	6.817	Energy loss- 11 kV line loss - LT line loss-loss due to Unmetered & others - loss due to Defective meter
24	% of Commercial loss due to theft/ pilferage w.r.t Input Energy	%	5.528	

COMPONENT-WISE AT&C LOSS
OF
CHIKKODI CIRCLE
IN
KARNATAKA STATE

I. Component-wise AT&C Loss for Chikkodi Circle for the Month of July 2013

Sl. No.	Particulars	Unit	Reading	Description
1	Energy Input	MU	116.428	11 kV Level
2	Metered Energy Sales	MU	90.204	
3	Energy Billed	MU	90.204	
4	Energy Loss in MU	MU	26.223	
5	Revenue Billed	Rs. lac	4271.626	
6	Revenue collected	Rs. lac	4137.756	Against Billed Amount
7	Billing Efficiency	%	77.477	Metered Energy in MU / Total energy in MU
8	Collection Efficiency	%	96.866	Revenue collected in Rs. Lakh / Revenue billed in Rs. Lakh
9	% of AT&C Losses	%	24.951	[1-(Billing Efficiency x Collection Efficiency)] x100
10	AT&C Loss	MU	29.050	[Energy Loss (MU) + Unrealized Revenue MU)] or (Input Energy x AT&C Loss as wrt Input Energy)
11	Unrealized Revenue	MU	2.827	AT&C Loss in MU - Energy Loss in MU
12	% of Unrealized Revenue wrt input energy	%	2.428	
15	11 kV line loss	MU	6.12	
16	% 11 kV line loss wrt input energy	%	5.259	
17	LT line loss	MU	6.78	
18	% LT line loss wrt input energy	%	5.825	
19	Commercial loss due to Defective meter	MU	0.067	
20	% Commercial loss due to Defective meter wrt input energy	%	0.058	
21	Commercial loss due to Unmetered & others	MU	4.512	
22	% Commercial loss due to Unmetered & others wrt input energy	%	3.875	
23	Commercial loss due to theft/ pilferage	MU	8.739	Energy loss- 11 kV line loss - LT line loss-loss due to Unmetered & others - loss due to Defective meter
24	% of Commercial loss due to theft/ pilferage w.r.t Input Energy	%	7.506	

KARNATAKA STATE AT A GLANCE

COMPONENT-WISE AT&C LOSS								
NAME OF THE CIRCLE/ STATE	11 kV INPUT ENERGY (MU)	% OF TECHNICAL LOSS DUE TO		% OF COMMERCIAL LOSS DUE TO				% OF AT&C LOSS
		11 kV LINE	LT LINE	PILFERAGE/ THEFT	DEFECTIVE METERS	UNMETERED/ AVERAGE BILLING	UNREALIZED REVENUE	
	(a)	(b)	(c)	(d)	(e)	(f)	(g)	
BANGALORE SOUTH	423.900	4.778	5.506	2.006	0.046	0.002	2.758	15.096
HUBLI	113.809	5.83	9.502	8.143	0.050	3.098	0.233	26.858
GULBERGA	123.305	5.101	8.664	5.528	0.129	6.071	6.224	31.737
CHIKODI	116.428	5.259	5.825	7.506	0.058	3.875	2.428	24.951
KARNATAKA STATE	**3655.100**	**5.060**	**6.640**	**4.290**	**0.060**	**1.990**	**2.890**	**20.940**

PIE DIAGRAM FOR % OF COMPONENT WISE AT&C LOSSES

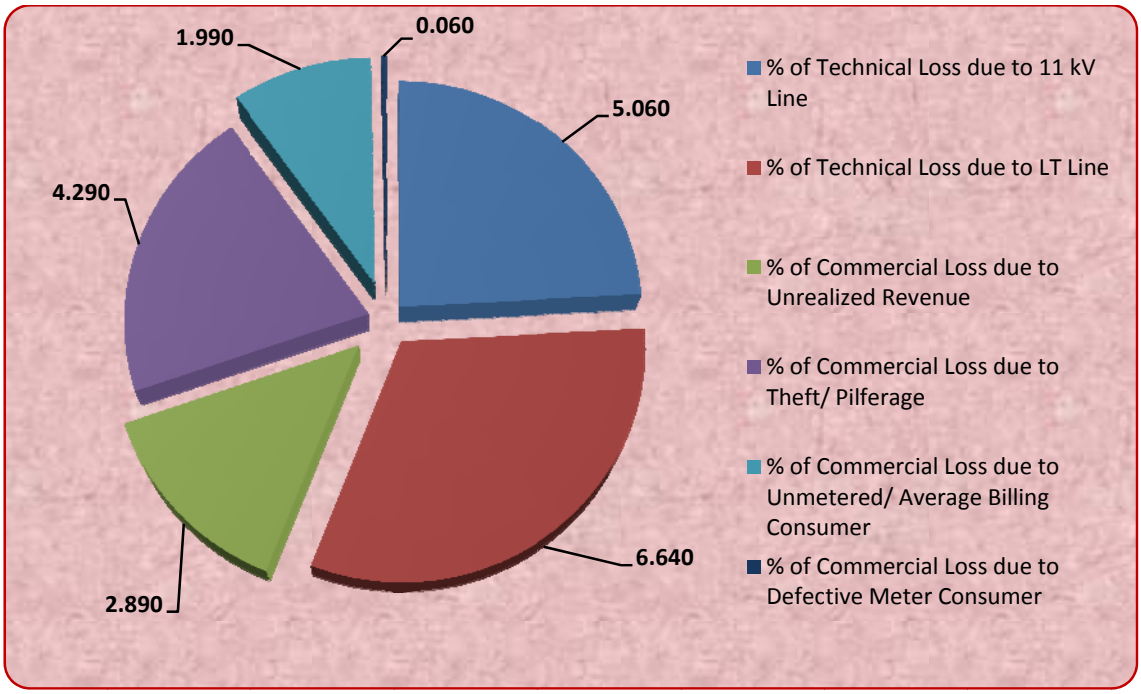

Percentage of AT&C Losses of Karnataka State is 20.94

FOR FURTHER DETAILS, PLEASE CONTACT:

- **PRADIP ROY**
  GENERAL MANAGER
  MECON LIMITED
  50, Chowringhee Road, Kolkata - 700071
  Mob: +918902499968
  Fax No.: 033-22824441
  E-mail : kolkata@meconlimied.co.in, meconkol@gmail.com

- **ROBIN DAS**
  DEPUTY GENERAL MANAGER
  MECON LIMITED
  50, Chowringhee Road, Kolkata - 700071,
  Mob: +919433331937
  Fax No.: 033-22824441
  E-mail : kolkata@meconlimied.co.in, meconkol@gmail.com

MECON TEAM

REPORT APPROVED BY :

1. **SHRI PRADIP ROY,** GENERAL MANAGER, MECON, KOLKATA

REPORT CHECKED BY :

2. **SHRI ROBIN DAS,** DGM (ELEC.) & SIC, MECON, KOLKATA
3. **SHRI RAMESH IYER,** DGM (ELEC.), MECON, BANGALORE

REPORT PREPARED BY :

4. **SHRI NIKHILESWAR CHOWDHURY,** DESIGN ENGINEER, MECON, KOLKATA
5. **SHRI SHAHNAWAZ AHMAD,** DESIGN ENGINEER, MECON, RANCHI
6. **SHRI MUKESH KUMAR JAISWARA,** DESIGN ENGINEER, MECON, KOLKATA
7. **SHRI MOINAK SARKAR,** ASST. PROJECT ENGINEER, MECON, KOLKATA

DRAWINGS AND DIAGRAMS
ON
ASSESSMENT OF COMPONENT-WISE AT&C LOSSES FOR KARNATAKA STATE

VOLUME-III

REPORT BY

MECON LIMITED

(A Govt. of India Enterprise)

MARCH 2014

SL NO	DRAWING DESCRIPTION	DRWING NO	REV	NO OF SHEETS
DRAWING LIST FOR BANGALORE SOUTH CIRCLE				
01	66KV POWER INTERCONNECTION DIAGRAM OF BANGALORE SOUTH CIRCLE.	MEC/19.56/Q707/BSC/ID/001	00	01
02	SUB-STATION SLD WITH 11KV FEEDER DETAILS FOR JAYANAGAR DIVISION UNDER BANGALORE SOUTH CIRCLE.	MEC/19.56/Q707/BSC/ID/002	00	09
03	SUB-STATION SLD WITH 11KV FEEDER DETAILS FOR KORAMANGALA (KML) DIVISION UNDER BANGALORE SOUTH CIRCLE	MEC/19.56/Q707/BSC/ID/003	00	11
04	SUB-STATION SLD WITH 11KV FEEDER DETAILS FOR HSR DIVISION UNDER BANGALORE SOUTH CIRCLE	MEC/19.56/Q707/BSC/ID/004	00	10
DRAWING LIST FOR HUBLI CIRCLE				
01	110KV & 33KV POWER INTERCONNECTION DIAGRAM AND 33KV HT CONSUMER DETAILS OF HUBLI CIRCLE.	MEC/19.56/Q707/HBL/ID/001	01	01
02	SUB-STATION SLD WITH 11KV FEEDER DETAILS FOR HUBLI DIVISION UNDER HUBLI CIRCLE.	MEC/19.56/Q707/HBL/ID/002	00	06
03	SUB-STATION SLD WITH 11KV FEEDER DETAILS FOR DHARWAD DIVISION UNDER HUBLI CIRCLE.	MEC/19.56/Q707/HBL/ID/003	00	06
04	SUB-STATION SLD WITH 11KV FEEDER DETAILS FOR GADAG DIVISION UNDER HUBLI CIRCLE.	MEC/19.56/Q707/HBL/ID/004	00	08
DRAWING LIST FOR CHIKODI CIRCLE				
01	110KV & 33KV POWER INTERCONNECTION DIAGRAM OF CHIKODI CIRCLE.	MEC/19.56/Q707/CKD/ID/001	00	01
02	SUB-STATION SLD WITH 11KV FEEDER DETAILS FOR RAIBAG DIVISION UNDER CHIKODI CIRCLE.	MEC/19.56/Q707/CKD/ID/002	00	06
03	SUB-STATION SLD WITH 11KV FEEDER DETAILS FOR CHIKODI DIVISION UNDER CHIKODI CIRCLE.	MEC/19.56/Q707/CKD/ID/003	00	07
04	SUB-STATION SLD WITH 11KV FEEDER DETAILS FOR ATHANI DIVISION UNDER CHIKODI CIRCLE.	MEC/19.56/Q707/CKD/ID/004	00	06
DRAWING LIST FOR GULBARGA CIRCLE				
01	110KV & 33KV POWER INTERCONNECTION DIAGRAM AND 33KV HT CONSUMER DETAILS OF GULBARGA CIRCLE.	MEC/19.56/Q707/GLB/ID/001	00	01

02	SUB-STATION SLD WITH 11KV FEEDER DETAILS FOR GULBARGA DIVISION-I UNDER GULBARGA CIRCLE.	MEC/19.56/Q707/GLB/ID/002	00	10
03	SUB-STATION SLD WITH 11KV FEEDER DETAILS FOR GULBARGA DIVISION-II UNDER GULBARGA CIRCLE.	MEC/19.56/Q707/GLB/ID/003	00	05
04	SUB-STATION SLD WITH 11KV FEEDER DETAILS FOR YADGIR DIVISION UNDER GULBARGA CIRCLE.	MEC/19.56/Q707/GLB/ID/004	00	07
05	SUB-STATION SLD WITH 11KV FEEDER DETAILS FOR SEDAM DIVISION UNDER GULBARGA CIRCLE.	MEC/19.56/Q707/GLB/ID/005	00	04

DRAWINGS AND DIAGRAMS
OF
BANGALORE SOUTH CIRCLE

DRAWING DESCRIPTION : 66KV POWER INTERCONNECTION DIAGRAM OF BANGALORE SOUTH CIRCLE.

DRAWING NO. : MEC/19.56/Q707/BSC/ID/001

NO. OF SHEETS : 01

DRG.NO.MEC/19.56/Q707/BSC/ID/001

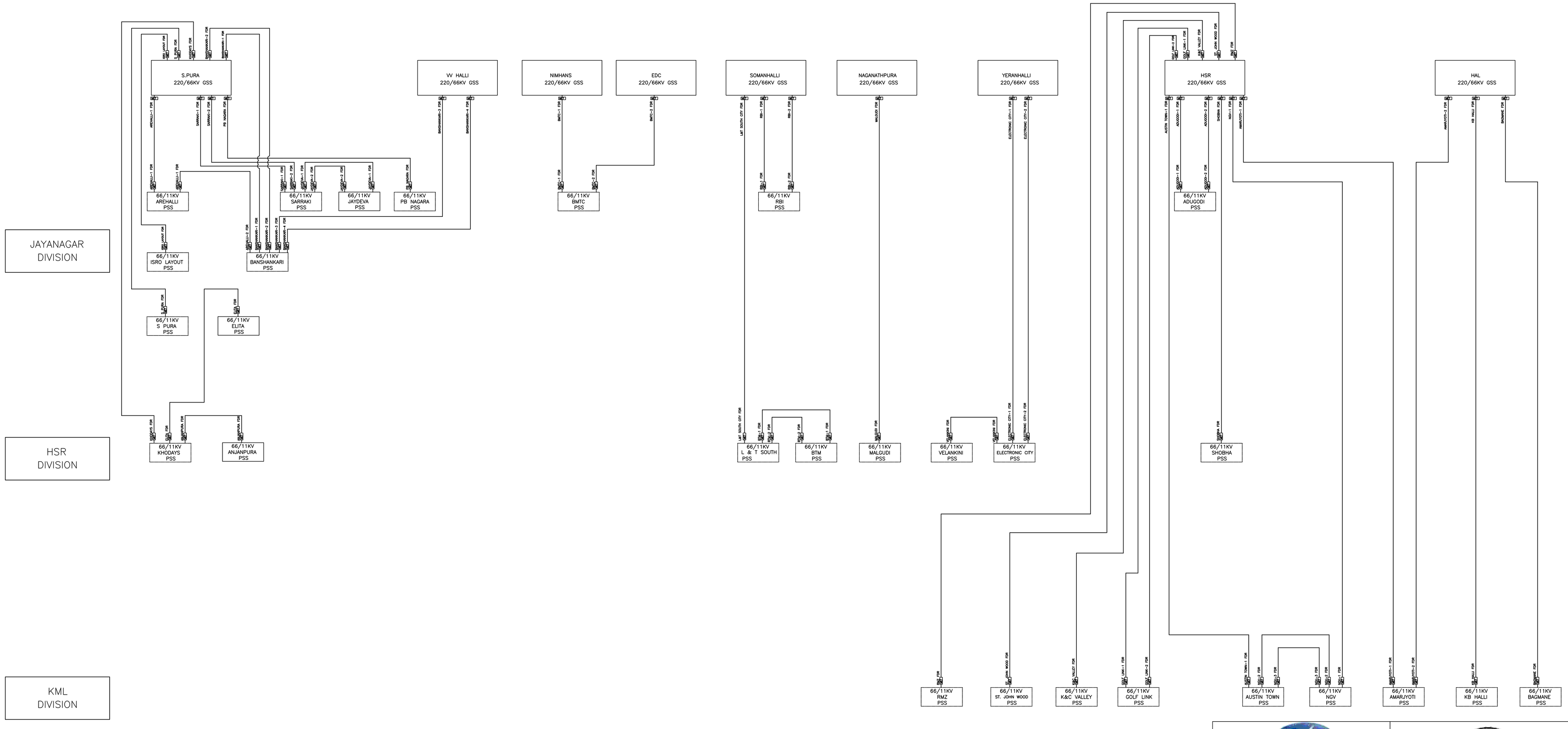

POWER FINANCE CORPORATION. NEW DELHI.

CENTRAL ELECTRICITY REGULATORY COMMISSION. NEW DELHI.

मेकॉन लिमिटेड

MECON LIMITED

ISO 9001 COMPANY

NOTE: –

THIS DRAWING PREPARED BASED ON INFORMATION RECEIVED FROM BESCOM FOR SELECTED CIRCLE AND OUR FIELD VISIT.

REV. NO.	DATE	ZONE	DESCRIPTION	BY	VERIFIED

REVISIONS

REFERENCES | DRG. NO.

THIS DRAWING IS THE PROPERTY OF MECON AND IS ISSUED FOR THE SPECIFIC PROJECT MENTIONED THEREIN. THIS IS NOT TO BE COPIED OR USED FOR OTHER PROJECTS UNLESS EXPRESSLY PERMITTED BY MECON.

REV. / SEC. | CONCURRED BY

SECTION	ELECTRICAL
LOCATION	KOLKATA
DESIGNED	M.K.JAISWARA
DRAWN	M.K.JAISWARA
CHECKED AND VERIFIED	ROBIN DAS
APPROVED	PRADIP ROY

ASSESMENT OF COMPONENT WISE AT&C LOSS FOR KARNATAKA STATE

66KV POWER INTERCONNECTION DIAGRAM OF BANGALORE SOUTH CIRCLE.

SCALE – N.T.S.

DRG.NO.MEC/19.56/Q707/BSC/ID/001

SHEET 1 OF 1 | REV. 0

DRAWING DESCRIPTION : SUB-STATION SLD WITH 11KV FEEDER DETAILS FOR JAYANAGAR DIVISION UNDER BANGALORE SOUTH CIRCLE.

DRAWING NO. : MEC/19.56/Q707/BSC/ID/002

NO. OF SHEETS : 09

DRG.NO.MEC/19.56/Q707/BSC/ID/002

JAYANAGAR DIVISION

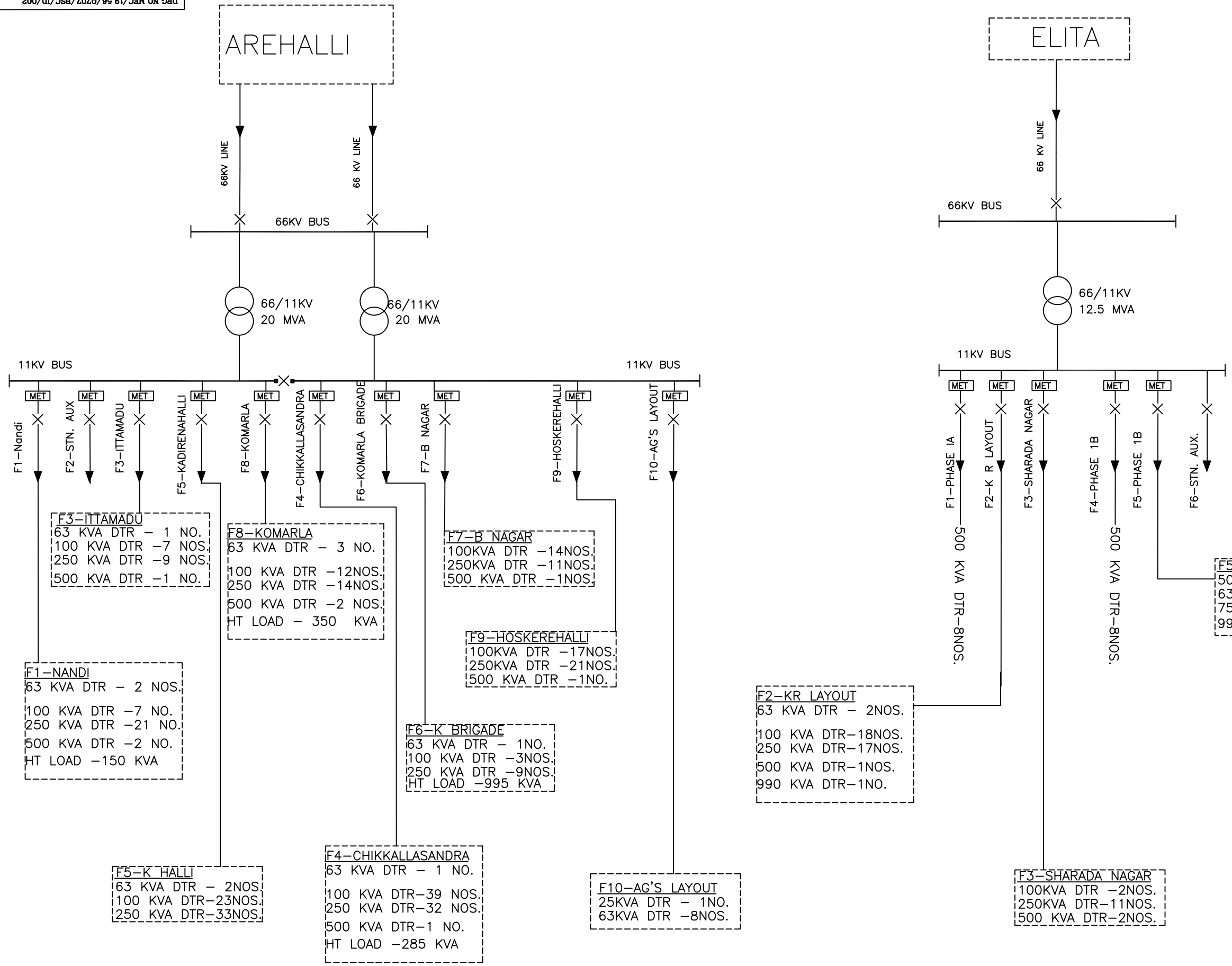

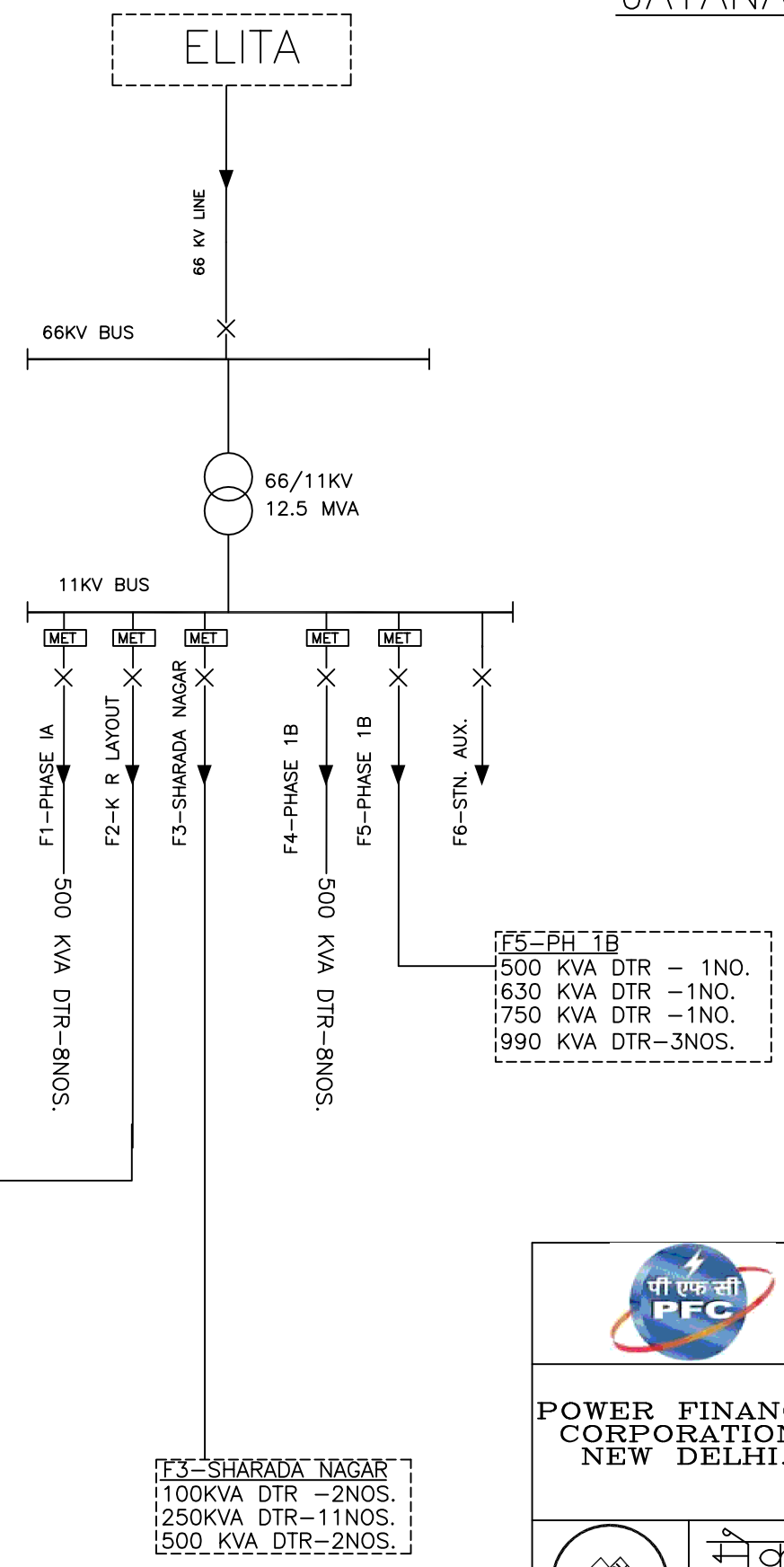

POWER FINANCE CORPORATION. NEW DELHI.

CENTRAL ELECTRICITY REGULATORY COMMISSION. NEW DELHI.

मेकॉन लिमिटेड

MECON LIMITED

NOTE: –

THIS DRAWING PREPARED BASED ON FIRST HAND INFORMATION RECEIVED FROM BESCOM FOR SELECTED CIRCLE AND OUR FIELD VISIT.

REV. NO.	DATE	ZONE	DESCRIPTION	BY	VERIFIED

REVISIONS

REV./SEC. — CONCURRED BY

REFERENCES — DRG. NO.

THIS DRAWING IS THE PROPERTY OF MECON AND IS ISSUED FOR THE SPECIFIC PROJECT MENTIONED THEREIN. THIS IS NOT TO BE COPIED OR USED FOR OTHER PROJECTS UNLESS EXPRESSLY PERMITTED BY MECON.

SECTION	ELECTRICAL
LOCATION	KOLKATA
DESIGNED	J DASGUPTA
DRAWN	A SENGUPTA
CHECKED AND VERIFIED	RAMESH IYER
APPROVED	PRADIP ROY

ASSESMENT OF COMPONENT WISE AT&C LOSS FOR KARNATAKA.

SUB–STATION SINLE LINE DIAGRAM WITH 11KV FEEDER DETAILS FOR JAYANAGAR DIVISION UNDER B'LORE SOUTH CIRCLE.

SCALE – N.T.S.

DRG.NO.MEC/19.56/Q707/BSC/ID/002

SHEET 1 OF 9 — REV. 1

DRG.NO.MEC/19.56/Q707/BSC/ID/002

JAYANAGAR DIVISION

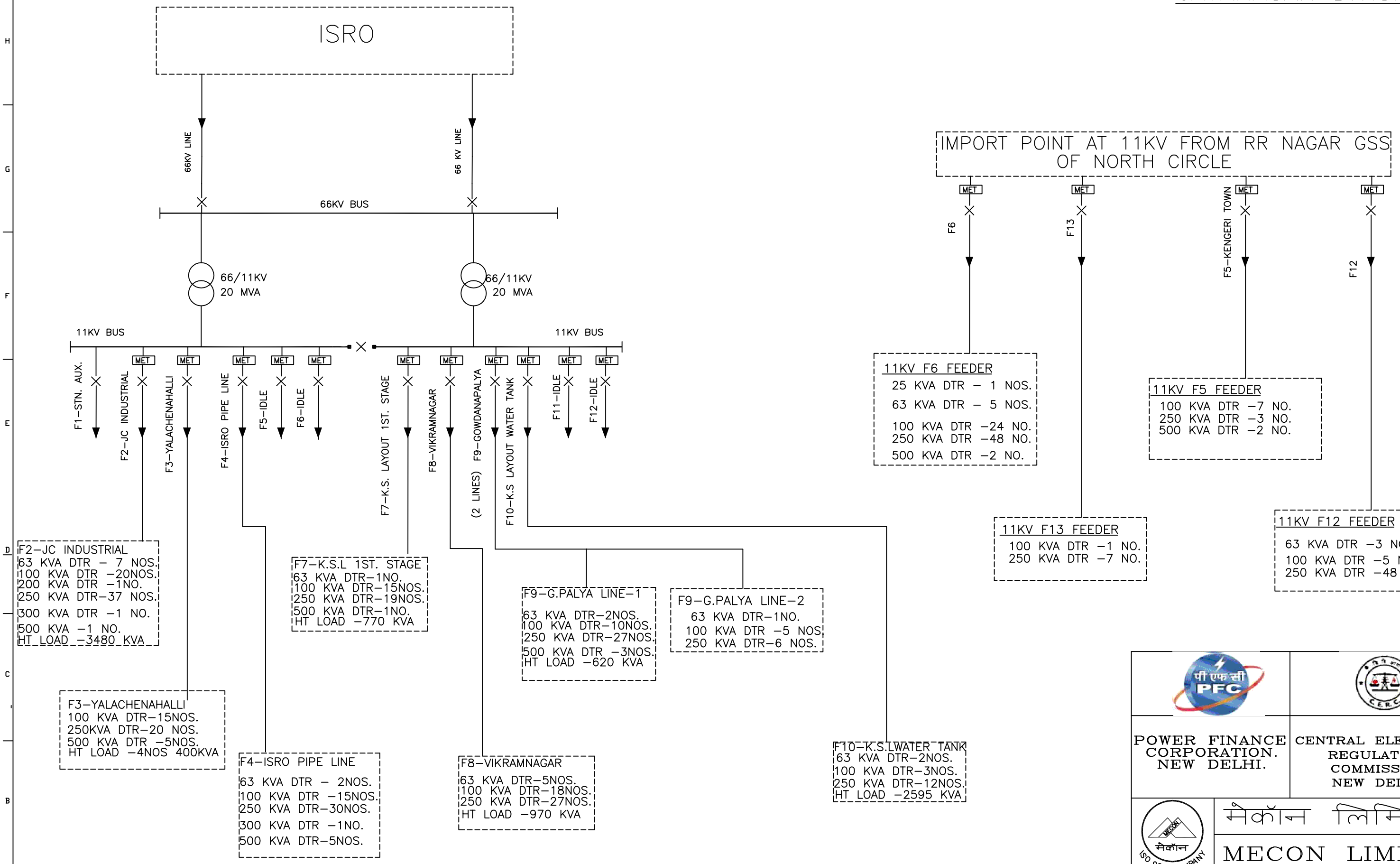

POWER FINANCE CORPORATION. NEW DELHI.

CENTRAL ELECTRICITY REGULATORY COMMISSION. NEW DELHI.

मेकॉन लिमिटेड

MECON LIMITED

NOTE: –

THIS DRAWING PREPARED BASED ON FIRST HAND INFORMATION RECEIVED FROM BESCOM FOR SELECTED CIRCLE AND OUR FIELD VISIT.

REV. NO.	DATE	ZONE	DESCRIPTION	BY	VERIFIED

REVISIONS

REFERENCES | DRG. NO.

THIS DRAWING IS THE PROPERTY OF MECON AND IS ISSUED FOR THE SPECIFIC PROJECT MENTIONED THEREIN. THIS IS NOT TO BE COPIED OR USED FOR OTHER PROJECTS UNLESS EXPRESSLY PERMITTED BY MECON.

CONCURRED BY

SECTION	ELECTRICAL
LOCATION	KOLKATA
DESIGNED	J DASGUPTA
DRAWN	A SENGUPTA
CHECKED AND VERIFIED	RAMESH IYER
APPROVED	PRADIP ROY

ASSESMENT OF COMPONENT WISE AT&C LOSS FOR KARNATAKA.

SUB-STATION SINLE LINE DIAGRAM WITH 11KV FEEDER DETAILS FOR JAYANAGAR DIVISION UNDER B'LORE SOUTH CIRCLE.

SCALE – N.T.S.

DRG.NO.MEC/19.56/Q707/BSC/ID/002

SHEET 2 OF 9

REV. 1

DRG.NO.MEC/19.56/Q707/BSC/ID/002

JAYANAGAR DIVISION

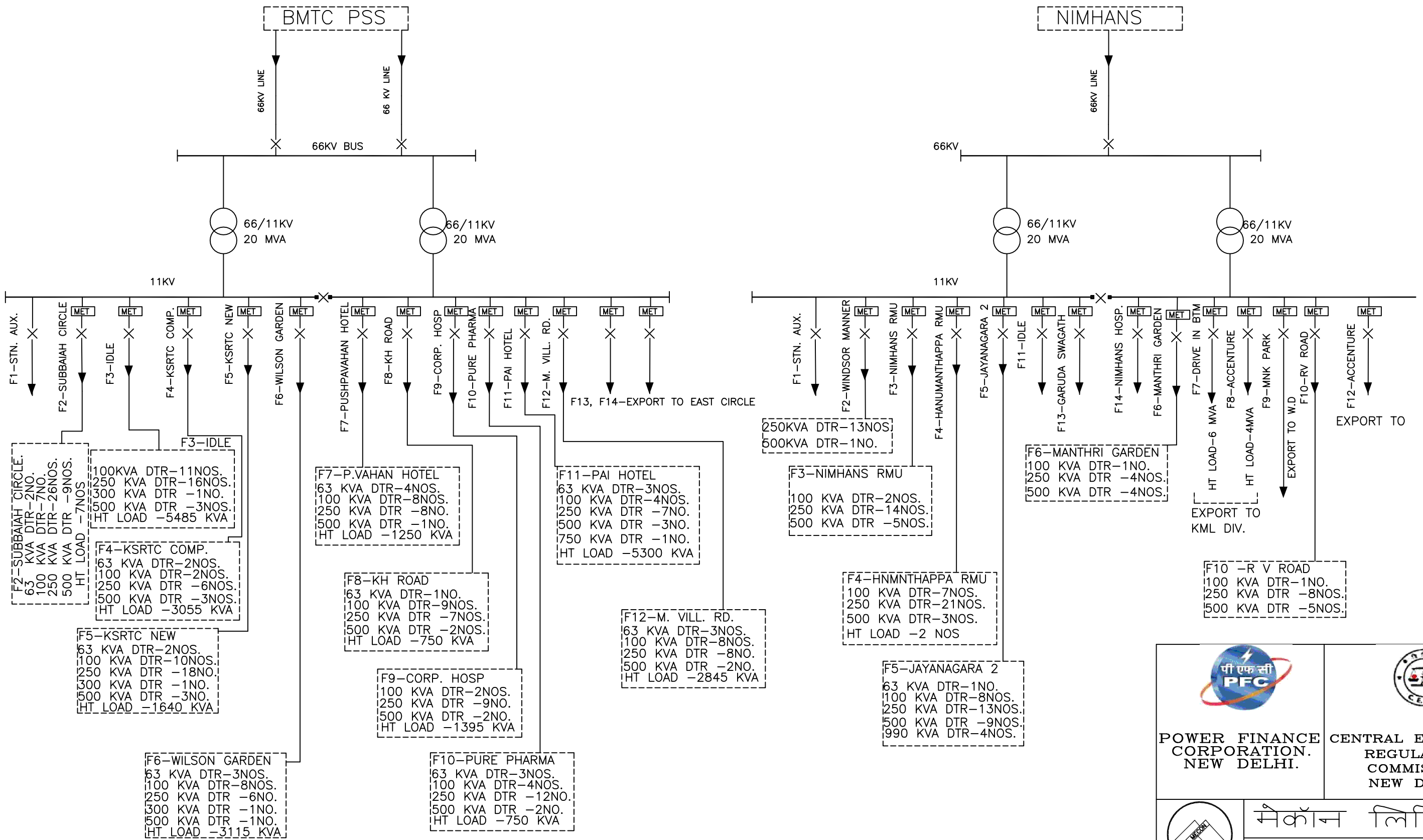

Note: For Load details pertaining to export points, refer drg. for concerned division.

POWER FINANCE CORPORATION. NEW DELHI.

CENTRAL ELECTRICITY REGULATORY COMMISSION. NEW DELHI.

मेकॉन लिमिटेड

MECON LIMITED

ISO 9001 COMPANY

NOTE: –

THIS DRAWING PREPARED BASED ON FIRST HAND INFORMATION RECEIVED FROM BESCOM FOR SELECTED CIRCLE AND OUR FIELD VISIT.

REV. NO.	DATE	ZONE	DESCRIPTION	BY	VERIFIED

REVISIONS

REV./SEC. — CONCURRED BY

REFERENCES	DRG. NO.

THIS DRAWING IS THE PROPERTY OF MECON AND IS ISSUED FOR THE SPECIFIC PROJECT MENTIONED THEREIN. THIS IS NOT TO BE COPIED OR USED FOR OTHER PROJECTS UNLESS EXPRESSLY PERMITTED BY MECON.

SECTION	ELECTRICAL
LOCATION	KOLKATA
DESIGNED	J DASGUPTA
DRAWN	A SENGUPTA
CHECKED AND VERIFIED	RAMESH IYER
APPROVED	PRADIP ROY

ASSESMENT OF COMPONENT WISE AT&C LOSS FOR KARNATAKA.

SUB-STATION SINLE LINE DIAGRAM WITH 11KV FEEDER DETAILS FOR JAYANAGAR DIVISION UNDER B'LORE SOUTH CIRCLE.

SCALE – N.T.S.

DRG.NO.MEC/19.56/Q707/BSC/ID/002

SHEET 3 OF 9

REV. 1

DRG.NO.MEC/19.56/Q707/BSC/ID/002

JAYANAGAR DIVISION

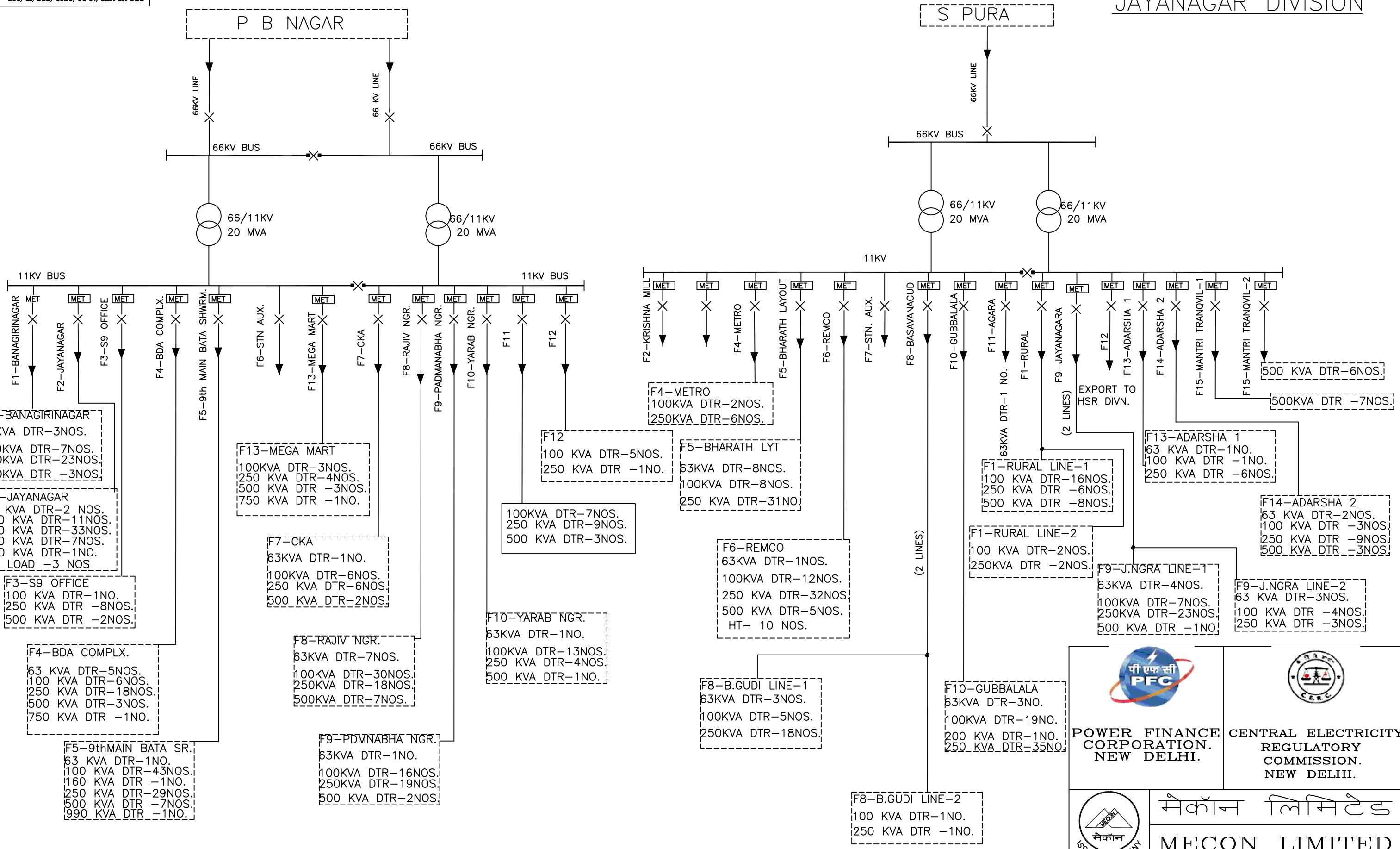

Note: For Load details pertaining to export points, refer drg. for concerned division.

POWER FINANCE CORPORATION. NEW DELHI.

CENTRAL ELECTRICITY REGULATORY COMMISSION. NEW DELHI.

मेकॉन लिमिटेड

MECON LIMITED

ISO 9001 COMPANY

NOTE: –

THIS DRAWING PREPARED BASED ON FIRST HAND INFORMATION RECEIVED FROM BESCOM FOR SELECTED CIRCLE AND OUR FIELD VISIT.

REV. NO.	DATE	ZONE	DESCRIPTION	BY	VERIFIED

REVISIONS

REV./SEC. — CONCURRED BY

REFERENCES	DRG. NO.

THIS DRAWING IS THE PROPERTY OF MECON AND IS ISSUED FOR THE SPECIFIC PROJECT MENTIONED THEREIN. THIS IS NOT TO BE COPIED OR USED FOR OTHER PROJECTS UNLESS EXPRESSLY PERMITTED BY MECON.

SECTION	ELECTRICAL
LOCATION	KOLKATA
DESIGNED	J DASGUPTA
DRAWN	A SENGUPTA
CHECKED AND VERIFIED	RAMESH IYER
APPROVED	PRADIP ROY

ASSESMENT OF COMPONENT WISE AT&C LOSS FOR KARNATAKA.

SUB-STATION SINLE LINE DIAGRAM WITH 11KV FEEDER DETAILS FOR JAYANAGAR DIVISION UNDER B'LORE SOUTH CIRCLE.

SCALE – N.T.S.

DRG.NO.MEC/19.56/Q707/BSC/ID/002

SHEET 4 OF 9 — REV. 1

DRG.NO.MEC/19.56/Q707/BSC/ID/002

JAYANAGAR DIVISION

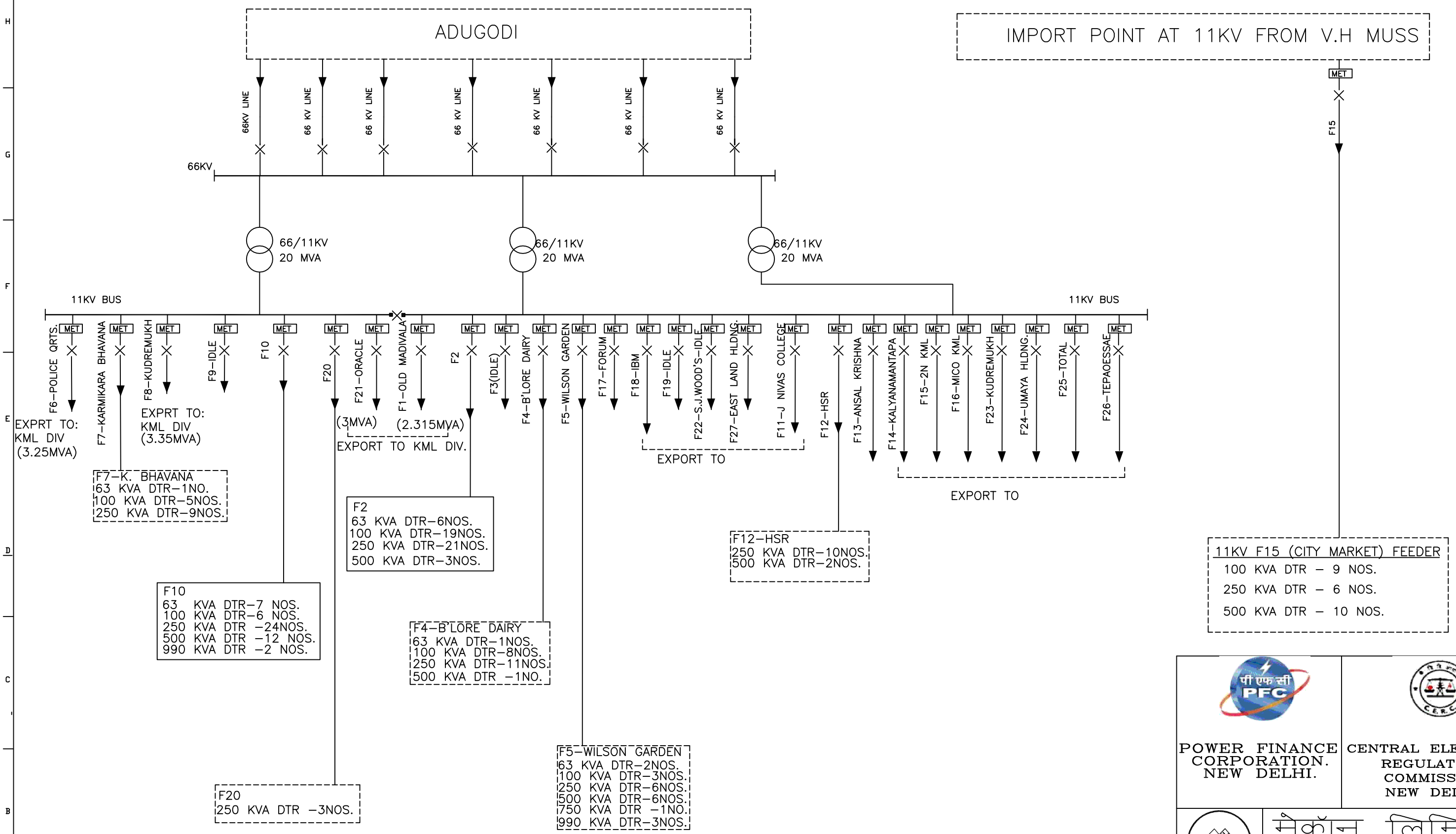

Note: For Load details pertaining to export points, refer drg. for concerned division.

POWER FINANCE CORPORATION. NEW DELHI.

CENTRAL ELECTRICITY REGULATORY COMMISSION. NEW DELHI.

मेकॉन लिमिटेड

MECON LIMITED

NOTE: –

THIS DRAWING PREPARED BASED ON FIRST HAND INFORMATION RECEIVED FROM BESCOM FOR SELECTED CIRCLE AND OUR FIELD VISIT.

REV. NO.	DATE	ZONE	DESCRIPTION	BY	VERIFIED

REVISIONS

REFERENCES | DRG. NO.

THIS DRAWING IS THE PROPERTY OF MECON AND IS ISSUED FOR THE SPECIFIC PROJECT MENTIONED THEREIN. THIS IS NOT TO BE COPIED OR USED FOR OTHER PROJECTS UNLESS EXPRESSLY PERMITTED BY MECON.

SECTION	ELECTRICAL
LOCATION	KOLKATA
DESIGNED	J DASGUPTA
DRAWN	A SENGUPTA
CHECKED AND VERIFIED	RAMESH IYER
APPROVED	PRADIP ROY

ASSESMENT OF COMPONENT WISE AT&C LOSS FOR KARNATAKA.

SUB–STATION SINLE LINE DIAGRAM WITH 11KV FEEDER DETAILS FOR JAYANAGAR DIVISION UNDER B'LORE SOUTH CIRCLE.

SCALE – N.T.S.

DRG.NO.MEC/19.56/Q707/BSC/ID/002

SHEET 5 OF 9

REV. 1

CONCURRED BY

REV./SEC.

DRG.NO.MEC/19.56/Q707/BSC/ID/002

JAYANAGAR DIVISION

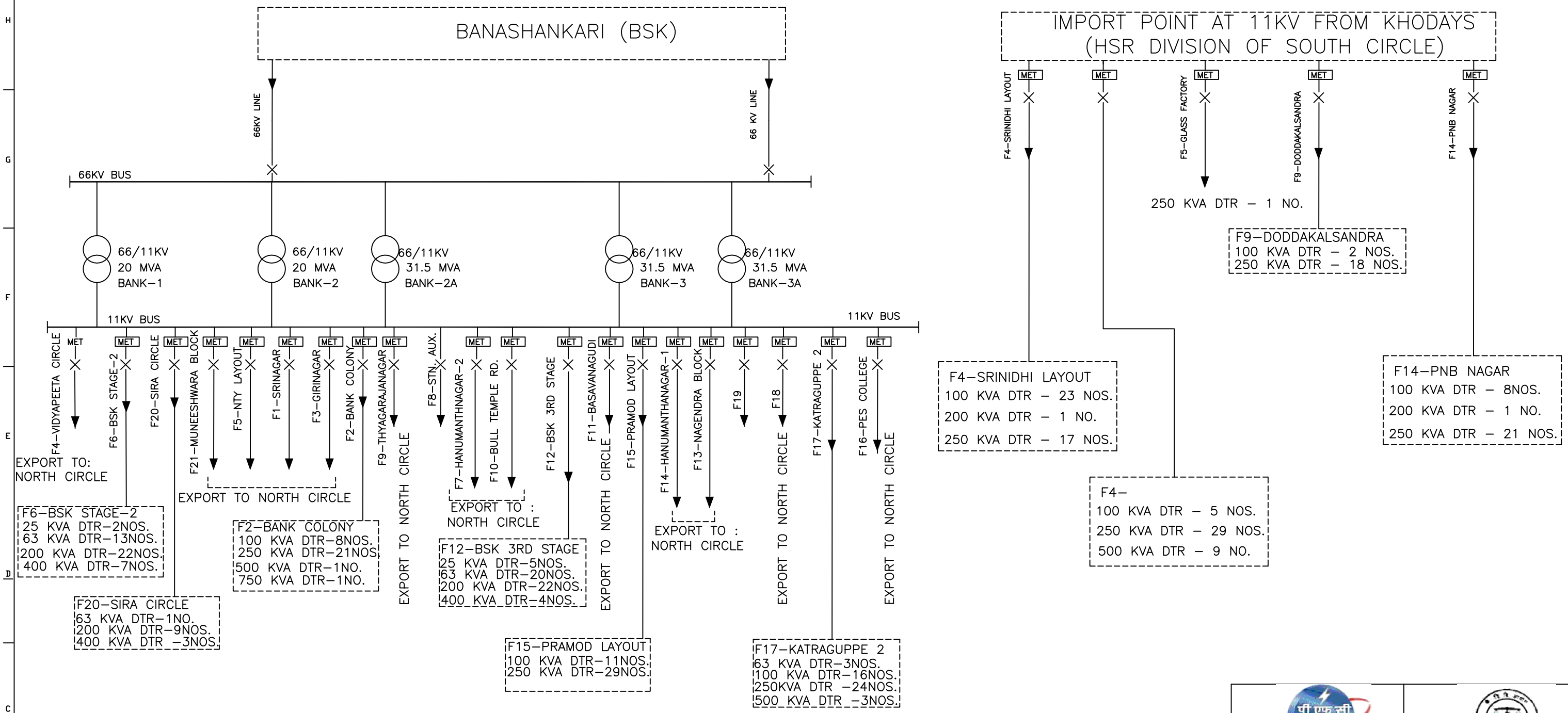

POWER FINANCE CORPORATION. NEW DELHI.

CENTRAL ELECTRICITY REGULATORY COMMISSION. NEW DELHI.

मेकॉन लिमिटेड

MECON LIMITED

NOTE: –

THIS DRAWING PREPARED BASED ON FIRST HAND INFORMATION RECEIVED FROM BESCOM FOR SELECTED CIRCLE AND OUR FIELD VISIT.

REV. NO.	DATE	ZONE	DESCRIPTION	BY	VERIFIED

REVISIONS

REV./SEC. — CONCURRED BY

REFERENCES — DRG. NO.

THIS DRAWING IS THE PROPERTY OF MECON AND IS ISSUED FOR THE SPECIFIC PROJECT MENTIONED THEREIN. THIS IS NOT TO BE COPIED OR USED FOR OTHER PROJECTS UNLESS EXPRESSLY PERMITTED BY MECON.

SECTION	ELECTRICAL
LOCATION	KOLKATA
DESIGNED	J DASGUPTA
DRAWN	A SENGUPTA
CHECKED AND VERIFIED	RAMESH IYER
APPROVED	PRADIP ROY

ASSESMENT OF COMPONENT WISE AT&C LOSS FOR KARNATAKA.

SUB-STATION SINLE LINE DIAGRAM WITH 11KV FEEDER DETAILS FOR JAYANAGAR DIVISION UNDER B'LORE SOUTH CIRCLE.

SCALE – N.T.S.

DRG.NO.MEC/19.56/Q707/BSC/ID/002

SHEET 6 OF 9

REV. 1

DRG.NO.MEC/19.56/Q707/BSC/ID/002

JAYANAGAR DIVISION

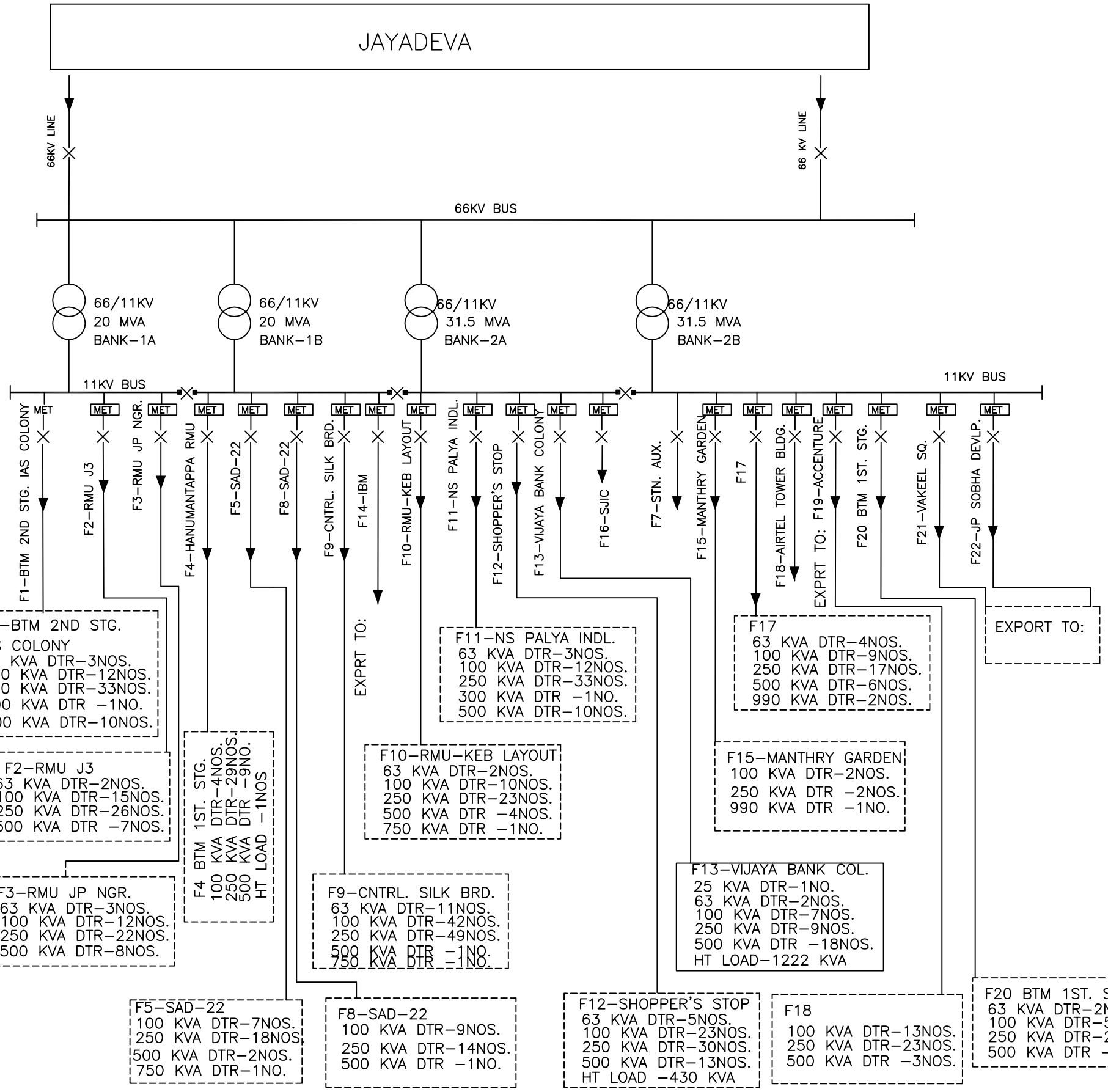

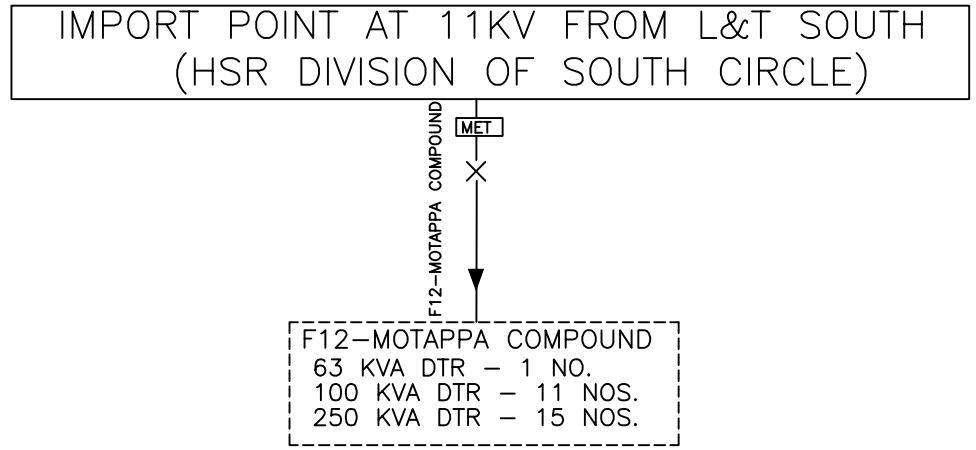

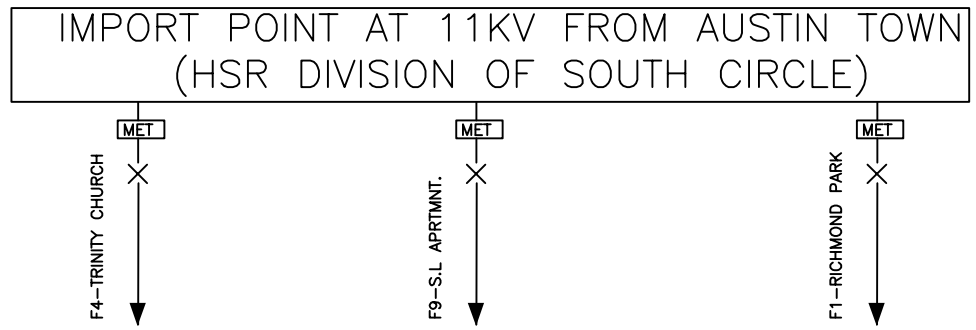

Note: For Load details pertaining to export points, refer drg. for concerned division.

POWER FINANCE CORPORATION. NEW DELHI.

CENTRAL ELECTRICITY REGULATORY COMMISSION. NEW DELHI.

मेकॉन लिमिटेड

MECON LIMITED

NOTE: –

THIS DRAWING PREPARED BASED ON FIRST HAND INFORMATION RECEIVED FROM BESCOM FOR SELECTED CIRCLE AND OUR FIELD VISIT.

REV. NO.	DATE	ZONE	DESCRIPTION	BY	VERIFIED

REVISIONS

REV./SEC. CONCURRED BY

REFERENCES | DRG. NO.

THIS DRAWING IS THE PROPERTY OF MECON AND IS ISSUED FOR THE SPECIFIC PROJECT MENTIONED THEREIN. THIS IS NOT TO BE COPIED OR USED FOR OTHER PROJECTS UNLESS EXPRESSLY PERMITTED BY MECON.

SECTION	ELECTRICAL
LOCATION	KOLKATA
DESIGNED	J DASGUPTA
DRAWN	A SENGUPTA
CHECKED AND VERIFIED	RAMESH IYER
APPROVED	PRADIP ROY

ASSESMENT OF COMPONENT WISE AT&C LOSS FOR KARNATAKA.

SUB-STATION SINLE LINE DIAGRAM WITH 11KV FEEDER DETAILS FOR JAYANAGAR DIVISION UNDER B'LORE SOUTH CIRCLE.

SCALE – N.T.S.

SHEET 7 OF 9 | REV. 1

DRG.NO.MEC/19.56/Q707/BSC/ID/002

DRG.NO.MEC/19.56/Q707/BSC/ID/002

JAYANAGAR DIVISION

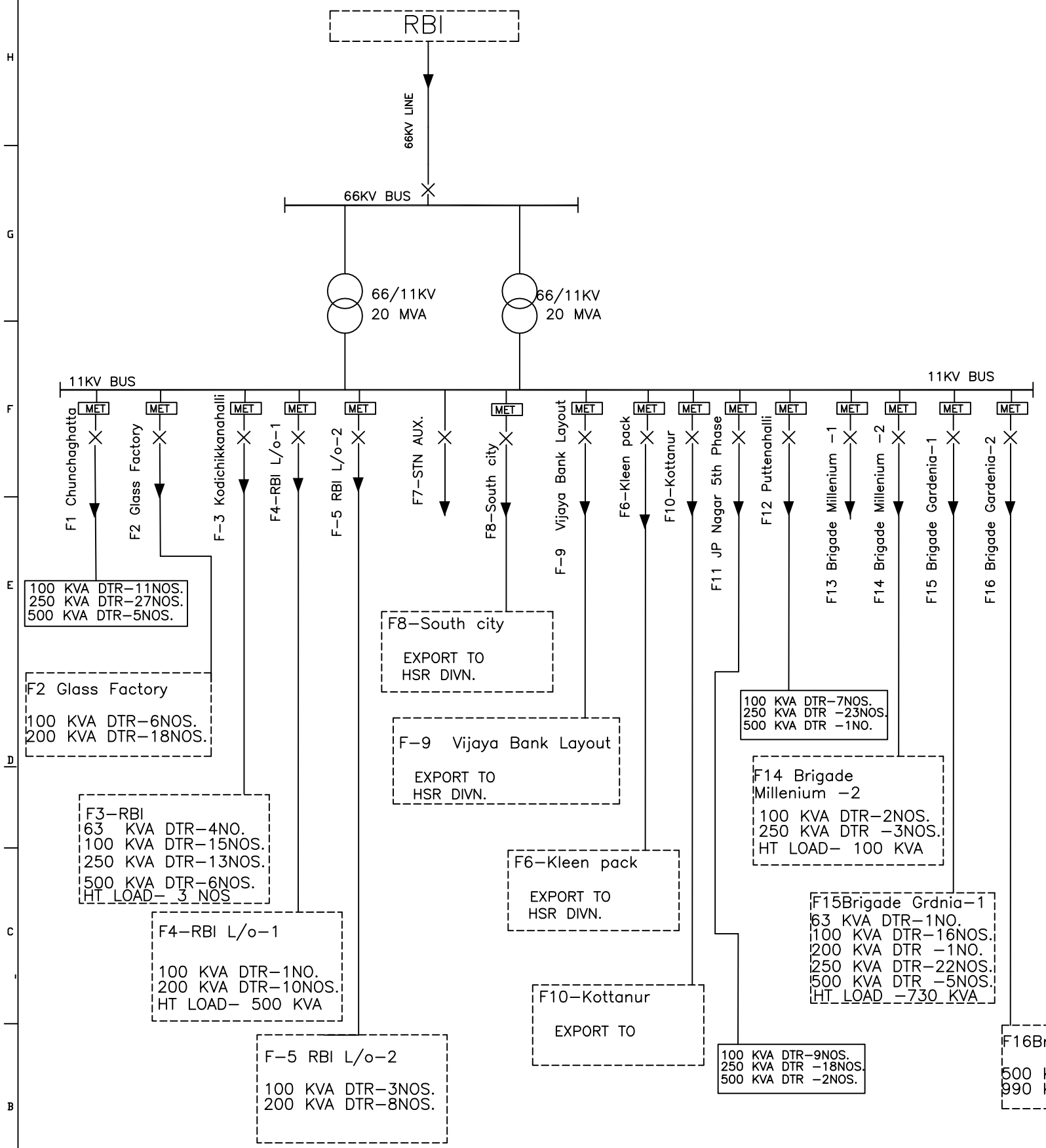

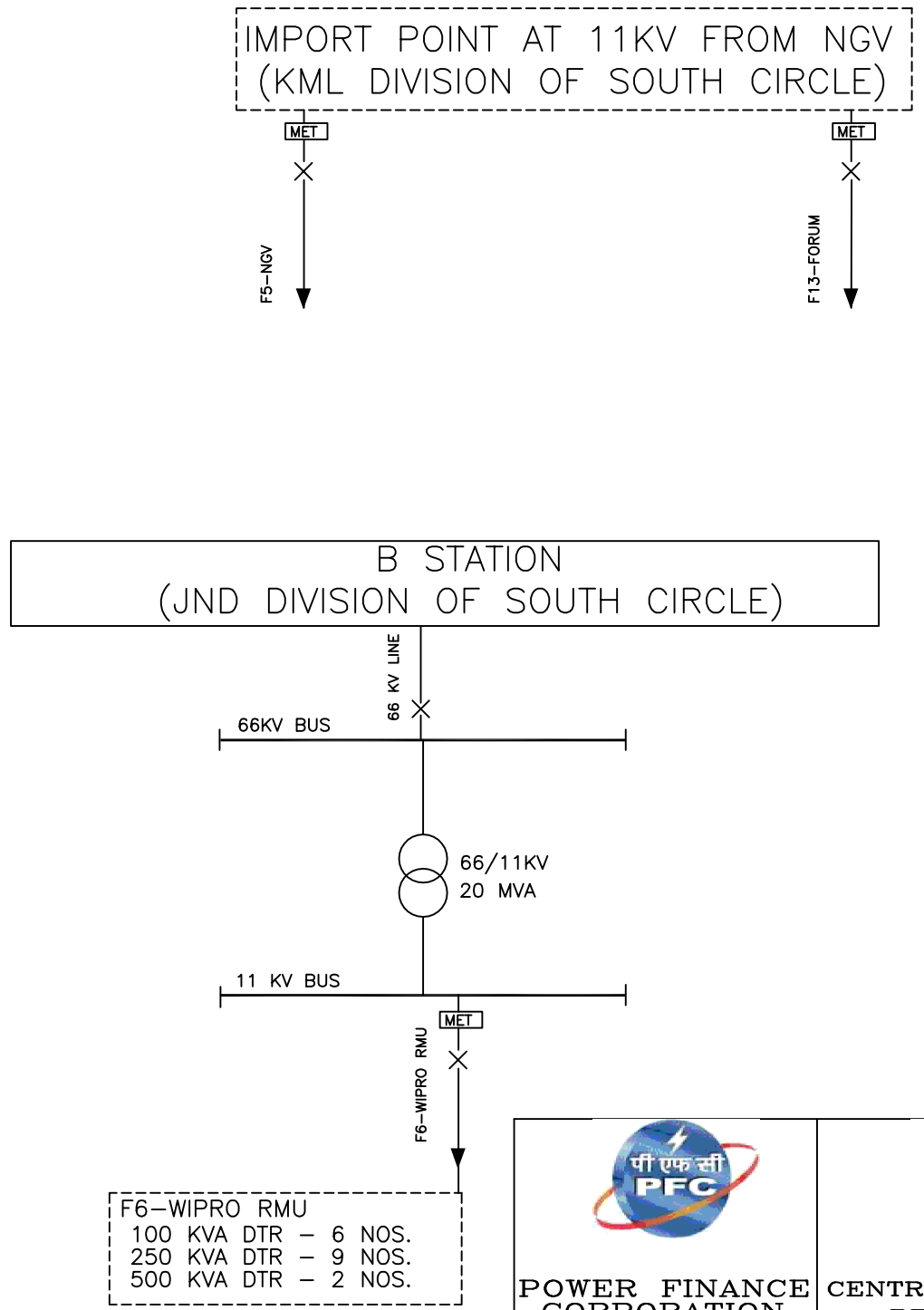

Note: For Load details pertaining to export points, refer drg. for concerned division.

POWER FINANCE CORPORATION. NEW DELHI.

CENTRAL ELECTRICITY REGULATORY COMMISSION. NEW DELHI.

मेकॉन लिमिटेड

MECON LIMITED

NOTE: –

THIS DRAWING PREPARED BASED ON FIRST HAND INFORMATION RECEIVED FROM BESCOM FOR SELECTED CIRCLE AND OUR FIELD VISIT.

REV. NO.	DATE	ZONE	DESCRIPTION	BY	VERIFIED

REVISIONS

REFERENCES | DRG. NO.

THIS DRAWING IS THE PROPERTY OF MECON AND IS ISSUED FOR THE SPECIFIC PROJECT MENTIONED THEREIN. THIS IS NOT TO BE COPIED OR USED FOR OTHER PROJECTS UNLESS EXPRESSLY PERMITTED BY MECON.

SECTION	ELECTRICAL
LOCATION	KOLKATA
DESIGNED	J DASGUPTA
DRAWN	A SENGUPTA
CHECKED AND VERIFIED	RAMESH IYER
APPROVED	PRADIP ROY

ASSESMENT OF COMPONENT WISE AT&C LOSS FOR KARNATAKA.

SUB-STATION SINLE LINE DIAGRAM WITH 11KV FEEDER DETAILS FOR JAYANAGAR DIVISION UNDER B'LORE SOUTH CIRCLE.

SCALE – N.T.S.

DRG.NO.MEC/19.56/Q707/BSC/ID/002

SHEET 8 OF 9

REV. 1

REV./SEC. | CONCURRED BY

DRG.NO.MEC/19.56/Q707/BSC/ID/002

JAYANAGAR DIVISION

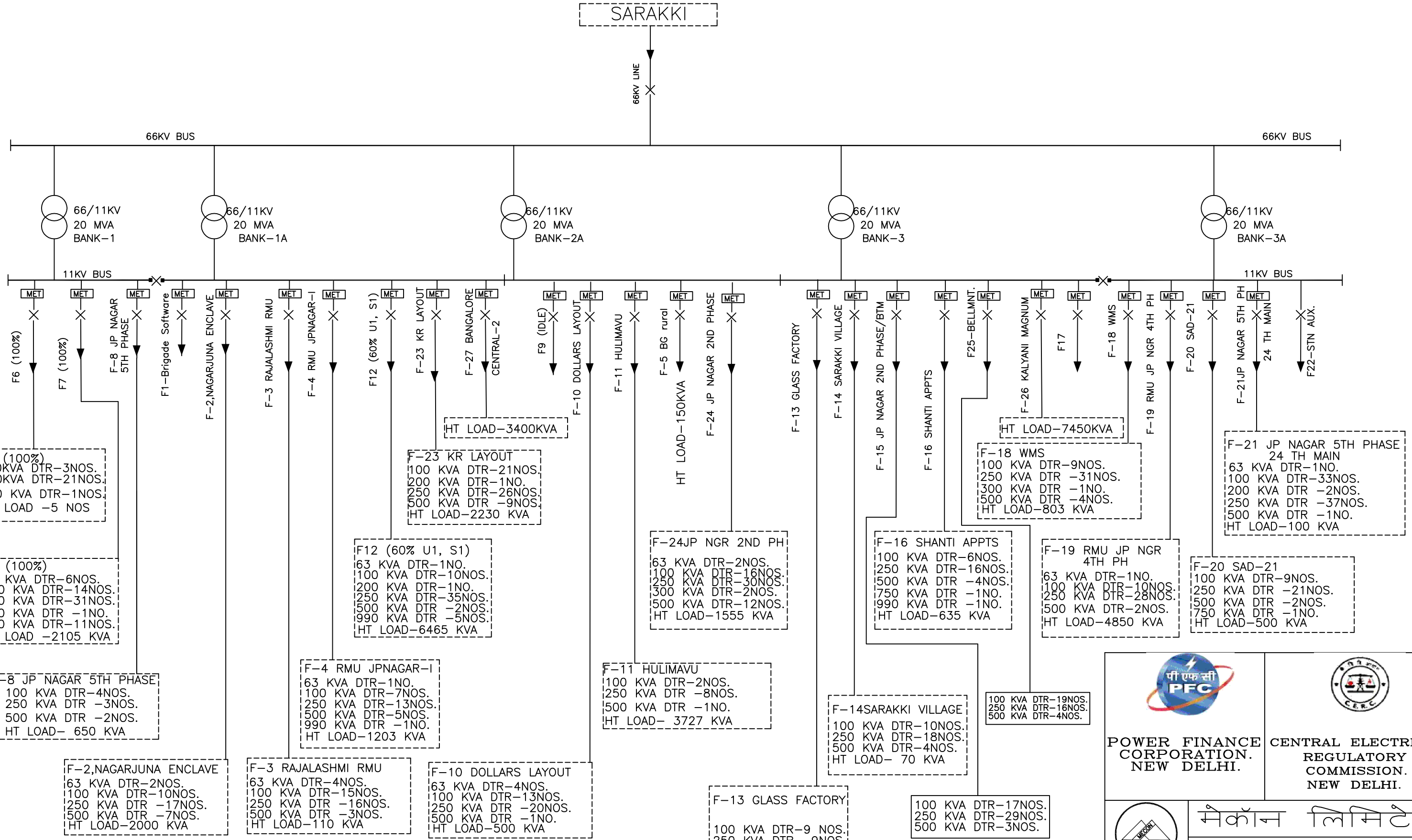

POWER FINANCE CORPORATION. NEW DELHI.

CENTRAL ELECTRICITY REGULATORY COMMISSION. NEW DELHI.

मेकॉन लिमिटेड

MECON LIMITED

ISO 9001 COMPANY

NOTE: –

THIS DRAWING PREPARED BASED ON FIRST HAND INFORMATION RECEIVED FROM BESCOM FOR SELECTED CIRCLE AND OUR FIELD VISIT.

REV. NO.	DATE	ZONE	DESCRIPTION	BY	VERIFIED

REVISIONS

REFERENCES | DRG. NO.

THIS DRAWING IS THE PROPERTY OF MECON AND IS ISSUED FOR THE SPECIFIC PROJECT MENTIONED THEREIN. THIS IS NOT TO BE COPIED OR USED FOR OTHER PROJECTS UNLESS EXPRESSLY PERMITTED BY MECON.

SECTION	ELECTRICAL
LOCATION	KOLKATA
DESIGNED	J DASGUPTA
DRAWN	A SENGUPTA
CHECKED AND VERIFIED	RAMESH IYER
APPROVED	PRADIP ROY

ASSESMENT OF COMPONENT WISE AT&C LOSS FOR KARNATAKA.

SUB-STATION SINLE LINE DIAGRAM WITH 11KV FEEDER DETAILS FOR JAYANAGAR DIVISION UNDER B'LORE SOUTH CIRCLE.

SCALE – N.T.S. | SHEET 9 OF 9 | REV. 1

DRG.NO.MEC/19.56/Q707/BSC/ID/002

REV./SEC. | CONCURRED BY

DRAWING DESCRIPTION : SUB-STATION SLD WITH 11KV FEEDER DETAILS FOR KORAMANGALA (KML) DIVISION UNDER BANGALORE SOUTH CIRCLE

DRAWING NO. : MEC/19.56/Q707/BSC/ID/003

NO. OF SHEETS : 11

DRG.NO.MEC/19.56/Q707/BSC/ID/003

KML DIVISION

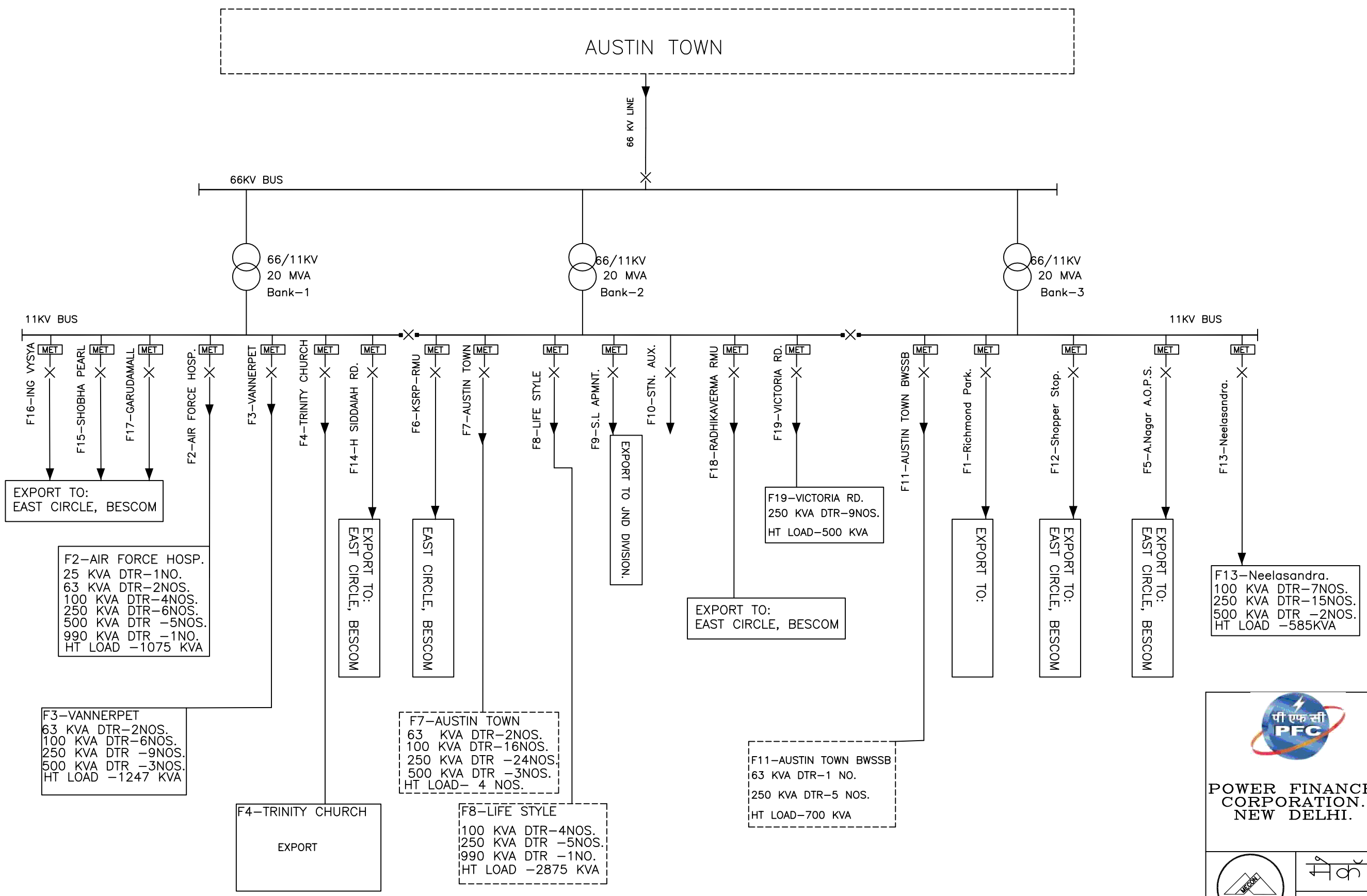

Note: For Load details pertaining to export points, refer drg. for concerned division.

POWER FINANCE CORPORATION. NEW DELHI.

CENTRAL ELECTRICITY REGULATORY COMMISSION. NEW DELHI.

मेकॉन लिमिटेड

MECON LIMITED

NOTE: –

THIS DRAWING PREPARED BASED ON FIRST HAND INFORMATION RECEIVED FROM BESCOM FOR SELECTED CIRCLE AND OUR FIELD VISIT.

REV. NO.	DATE	ZONE	DESCRIPTION	BY	VERIFIED

REVISIONS

REFERENCES | DRG. NO.

THIS DRAWING IS THE PROPERTY OF MECON AND IS ISSUED FOR THE SPECIFIC PROJECT MENTIONED THEREIN. THIS IS NOT TO BE COPIED OR USED FOR OTHER PROJECTS UNLESS EXPRESSLY PERMITTED BY MECON.

SECTION	ELECTRICAL
LOCATION	KOLKATA
DESIGNED	J DASGUPTA
DRAWN	A SENGUPTA
CHECKED AND VERIFIED	RAMESH IYER
APPROVED	PRADIP ROY

ASSESMENT OF COMPONENT WISE AT&C LOSS FOR KARNATAKA.

SUB-STATION SINLE LINE DIAGRAM WITH 11KV FEEDER DETAILS FOR KORAMANGALA (KML) DIVISION UNDER B'LORE SOUTH CIRCLE.

SCALE – N.T.S.

DRG.NO.MEC/19.56/Q707/BSC/ID/003

SHEET 1 OF 11

REV. 0

REV./SEC.

CONCURRED BY

DRG.NO.MEC/19.56/Q707/BSC/ID/003

KML DIVISION

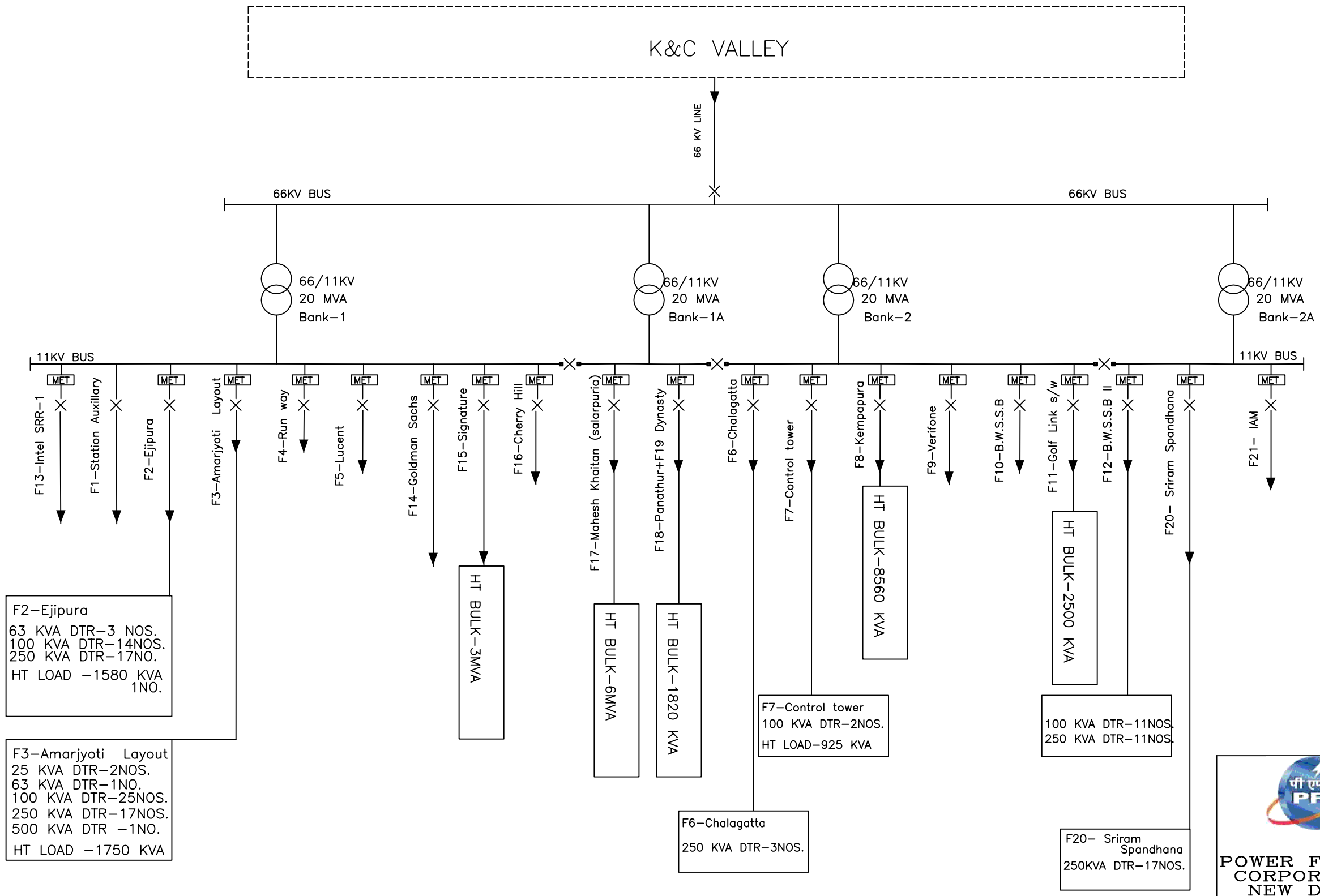

POWER FINANCE CORPORATION. NEW DELHI.

CENTRAL ELECTRICITY REGULATORY COMMISSION. NEW DELHI.

मेकॉन लिमिटेड

MECON LIMITED

NOTE: –

THIS DRAWING PREPARED BASED ON FIRST HAND INFORMATION RECEIVED FROM BESCOM FOR SELECTED CIRCLE AND OUR FIELD VISIT.

REV. NO.	DATE	ZONE	DESCRIPTION	BY	VERIFIED

REVISIONS

REV./SEC. — CONCURRED BY

REFERENCES — DRG. NO.

THIS DRAWING IS THE PROPERTY OF MECON AND IS ISSUED FOR THE SPECIFIC PROJECT MENTIONED THEREIN. THIS IS NOT TO BE COPIED OR USED FOR OTHER PROJECTS UNLESS EXPRESSLY PERMITTED BY MECON.

SECTION	ELECTRICAL
LOCATION	KOLKATA
DESIGNED	J DASGUPTA
DRAWN	A SENGUPTA
CHECKED AND VERIFIED	RAMESH IYER
APPROVED	PRADIP ROY

ASSESMENT OF COMPONENT WISE AT&C LOSS FOR KARNATAKA.

SUB-STATION SINLE LINE DIAGRAM WITH 11KV FEEDER DETAILS FOR KORAMANGALA (KML) DIVISION UNDER B'LORE SOUTH CIRCLE.

SCALE – N.T.S.

SHEET 2 OF 11

REV. 0

DRG.NO.MEC/19.56/Q707/BSC/ID/003

DRG.NO.MEC/19.56/Q707/BSC/ID/003

KML DIVISION

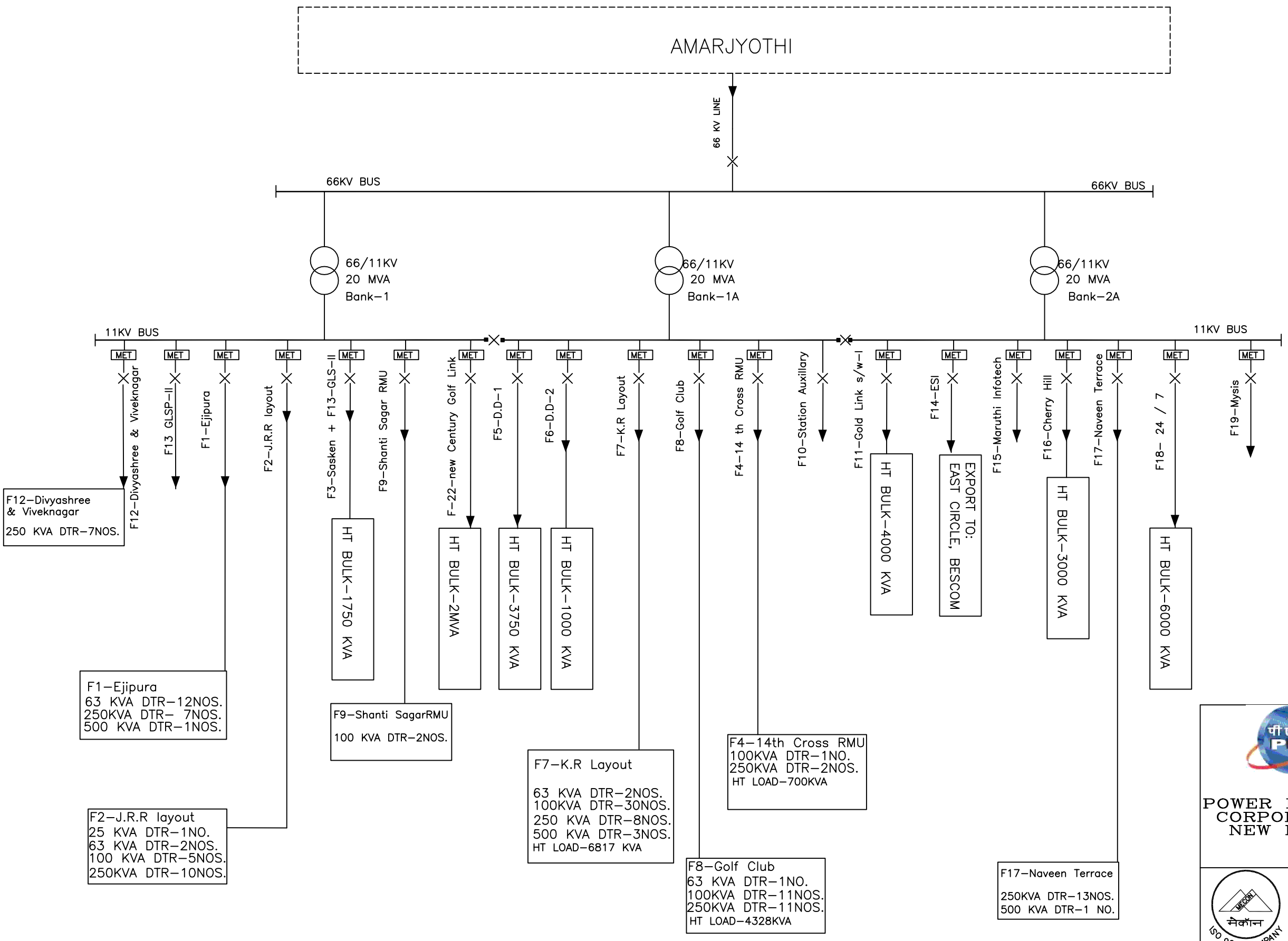

POWER FINANCE CORPORATION. NEW DELHI.

CENTRAL ELECTRICITY REGULATORY COMMISSION. NEW DELHI.

मेकॉन लिमिटेड

MECON LIMITED

NOTE: –

THIS DRAWING PREPARED BASED ON FIRST HAND INFORMATION RECEIVED FROM BESCOM FOR SELECTED CIRCLE AND OUR FIELD VISIT.

REV. NO.	DATE	ZONE	DESCRIPTION	BY	VERIFIED

REVISIONS

REFERENCES | DRG. NO.

THIS DRAWING IS THE PROPERTY OF MECON AND IS ISSUED FOR THE SPECIFIC PROJECT MENTIONED THEREIN. THIS IS NOT TO BE COPIED OR USED FOR OTHER PROJECTS UNLESS EXPRESSLY PERMITTED BY MECON.

SECTION	ELECTRICAL
LOCATION	KOLKATA
DESIGNED	J DASGUPTA
DRAWN	A SENGUPTA
CHECKED AND VERIFIED	RAMESH IYER
APPROVED	PRADIP ROY

ASSESMENT OF COMPONENT WISE AT&C LOSS FOR KARNATAKA.

SUB–STATION SINLE LINE DIAGRAM WITH 11KV FEEDER DETAILS FOR KORAMANGALA (KML) DIVISION UNDER B'LORE SOUTH CIRCLE.

SCALE – N.T.S.

DRG.NO.MEC/19.56/Q707/BSC/ID/003

SHEET 3 OF 11 | REV. 0

CONCURRED BY

REV. / SEC.

DRG.NO.MEC/19.56/Q707/BSC/ID/003

KML DIVISION

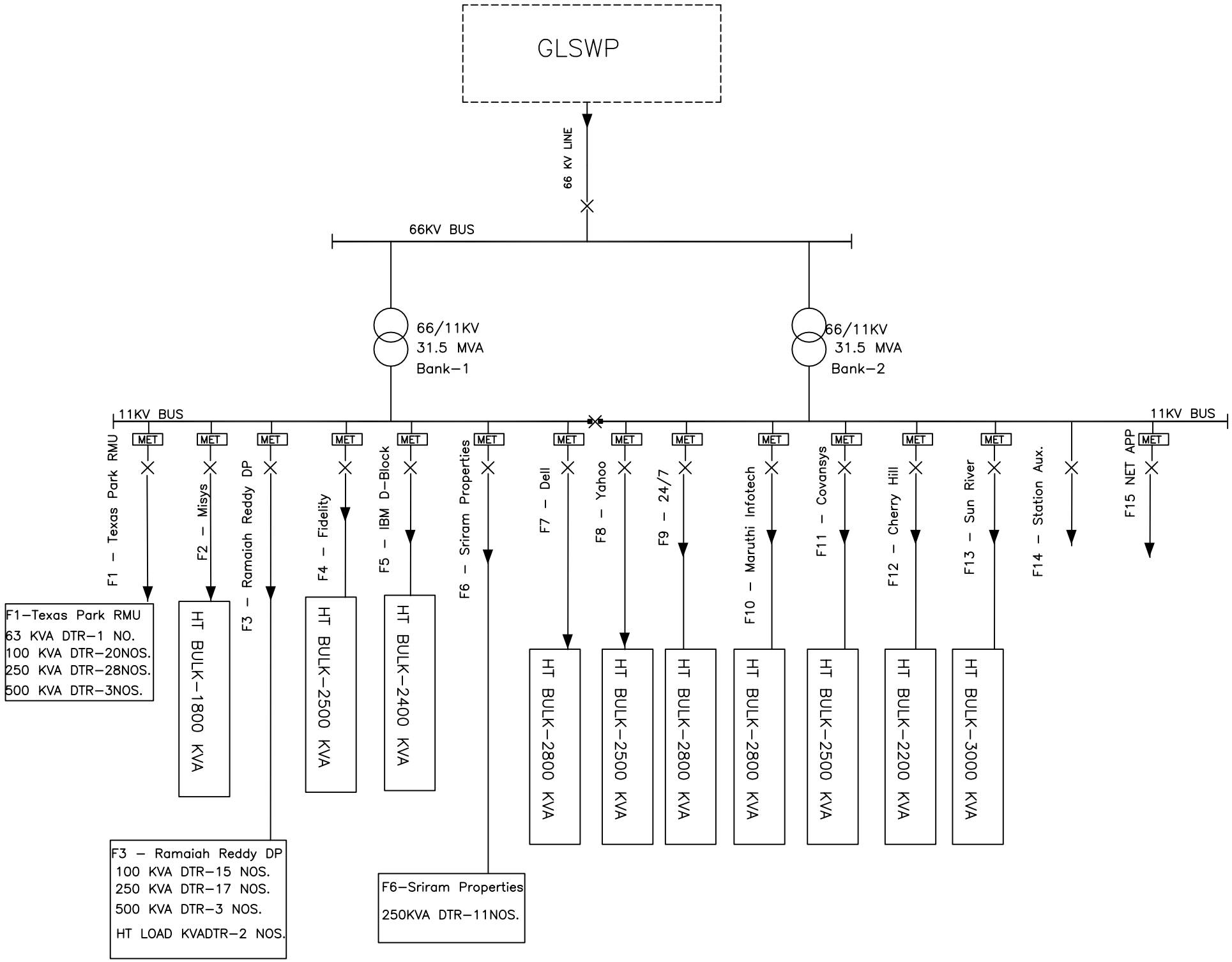

POWER FINANCE CORPORATION. NEW DELHI.

CENTRAL ELECTRICITY REGULATORY COMMISSION. NEW DELHI.

मेकॉन लिमिटेड

MECON LIMITED

ISO 9001 COMPANY

NOTE: –

THIS DRAWING PREPARED BASED ON FIRST HAND INFORMATION RECEIVED FROM BESCOM FOR SELECTED CIRCLE AND OUR FIELD VISIT.

REV. NO.	DATE	ZONE	DESCRIPTION	BY	VERIFIED

REVISIONS

REV./SEC. — CONCURRED BY

REFERENCES — DRG. NO.

THIS DRAWING IS THE PROPERTY OF MECON AND IS ISSUED FOR THE SPECIFIC PROJECT MENTIONED THEREIN. THIS IS NOT TO BE COPIED OR USED FOR OTHER PROJECTS UNLESS EXPRESSLY PERMITTED BY MECON.

SECTION	ELECTRICAL
LOCATION	KOLKATA
DESIGNED	J DASGUPTA
DRAWN	A SENGUPTA
CHECKED AND VERIFIED	RAMESH IYER
APPROVED	PRADIP ROY

ASSESMENT OF COMPONENT WISE AT&C LOSS FOR KARNATAKA.

SUB–STATION SINLE LINE DIAGRAM WITH 11KV FEEDER DETAILS FOR KORAMANGALA (KML) DIVISION UNDER B'LORE SOUTH CIRCLE.

SCALE – N.T.S.

DRG.NO.MEC/19.56/Q707/BSC/ID/003

SHEET 4 OF 11 — REV. 0

DRG.NO.MEC/19.56/Q707/BSC/ID/003

KML DIVISION

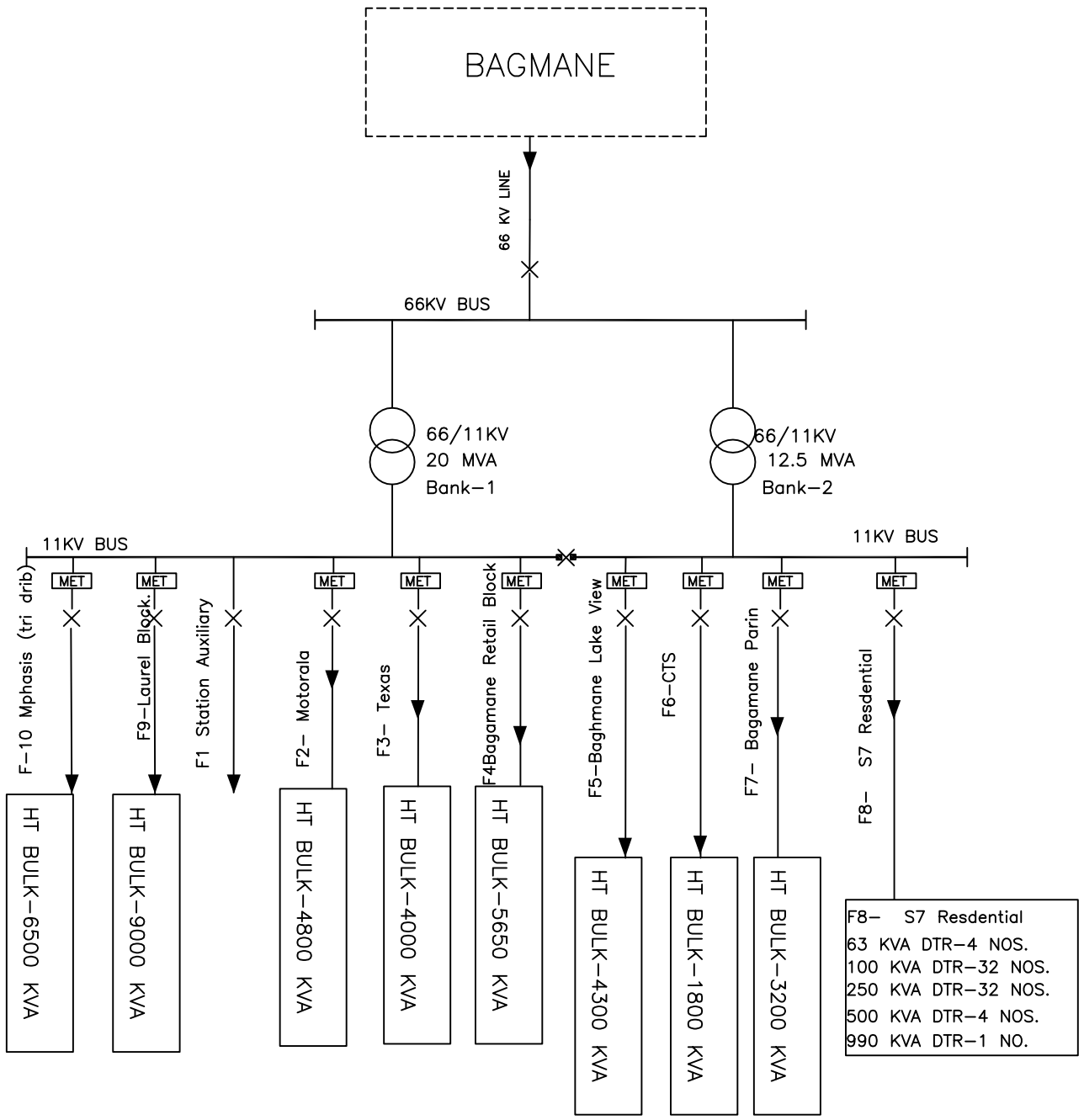

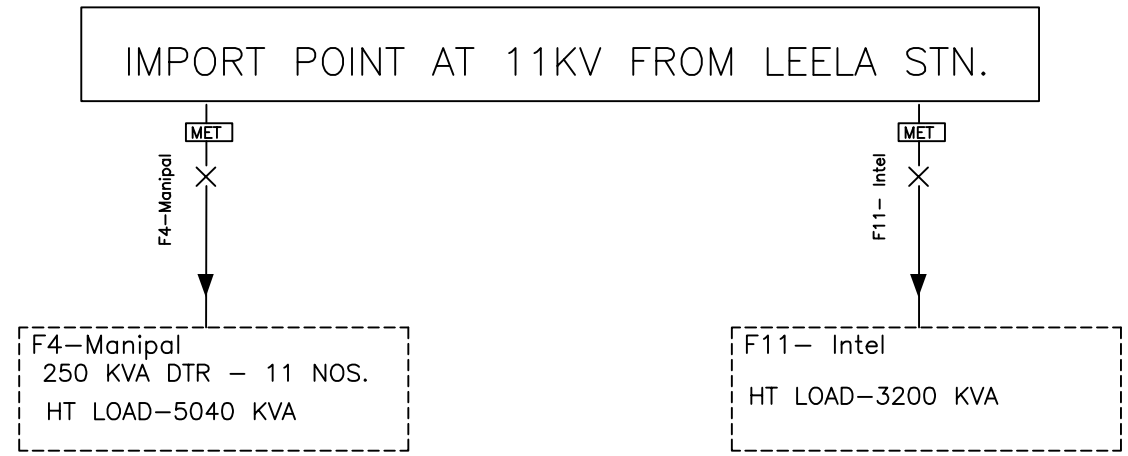

POWER FINANCE CORPORATION. NEW DELHI.

CENTRAL ELECTRICITY REGULATORY COMMISSION. NEW DELHI.

मेकॉन लिमिटेड

MECON LIMITED

NOTE: -

THIS DRAWING PREPARED BASED ON FIRST HAND INFORMATION RECEIVED FROM BESCOM FOR SELECTED CIRCLE AND OUR FIELD VISIT.

REV. NO.	DATE	ZONE	DESCRIPTION	BY	VERIFIED

REVISIONS

REFERENCES	DRG. NO.

THIS DRAWING IS THE PROPERTY OF MECON AND IS ISSUED FOR THE SPECIFIC PROJECT MENTIONED THEREIN. THIS IS NOT TO BE COPIED OR USED FOR OTHER PROJECTS UNLESS EXPRESSLY PERMITTED BY MECON.

SECTION	ELECTRICAL
LOCATION	KOLKATA
DESIGNED	J DASGUPTA
DRAWN	A SENGUPTA
CHECKED AND VERIFIED	RAMESH IYER
APPROVED	PRADIP ROY

ASSESMENT OF COMPONENT WISE AT&C LOSS FOR KARNATAKA.

SUB-STATION SINLE LINE DIAGRAM WITH 11KV FEEDER DETAILS FOR KORAMANGALA (KML) DIVISION UNDER B'LORE SOUTH CIRCLE.

SCALE - N.T.S.

DRG.NO.MEC/19.56/Q707/BSC/ID/003

SHEET 5 OF 11

REV. 0

CONCURRED BY

REV. SEC.

DRG.NO.MEC/19.56/Q707/BSC/ID/003

KML DIVISION

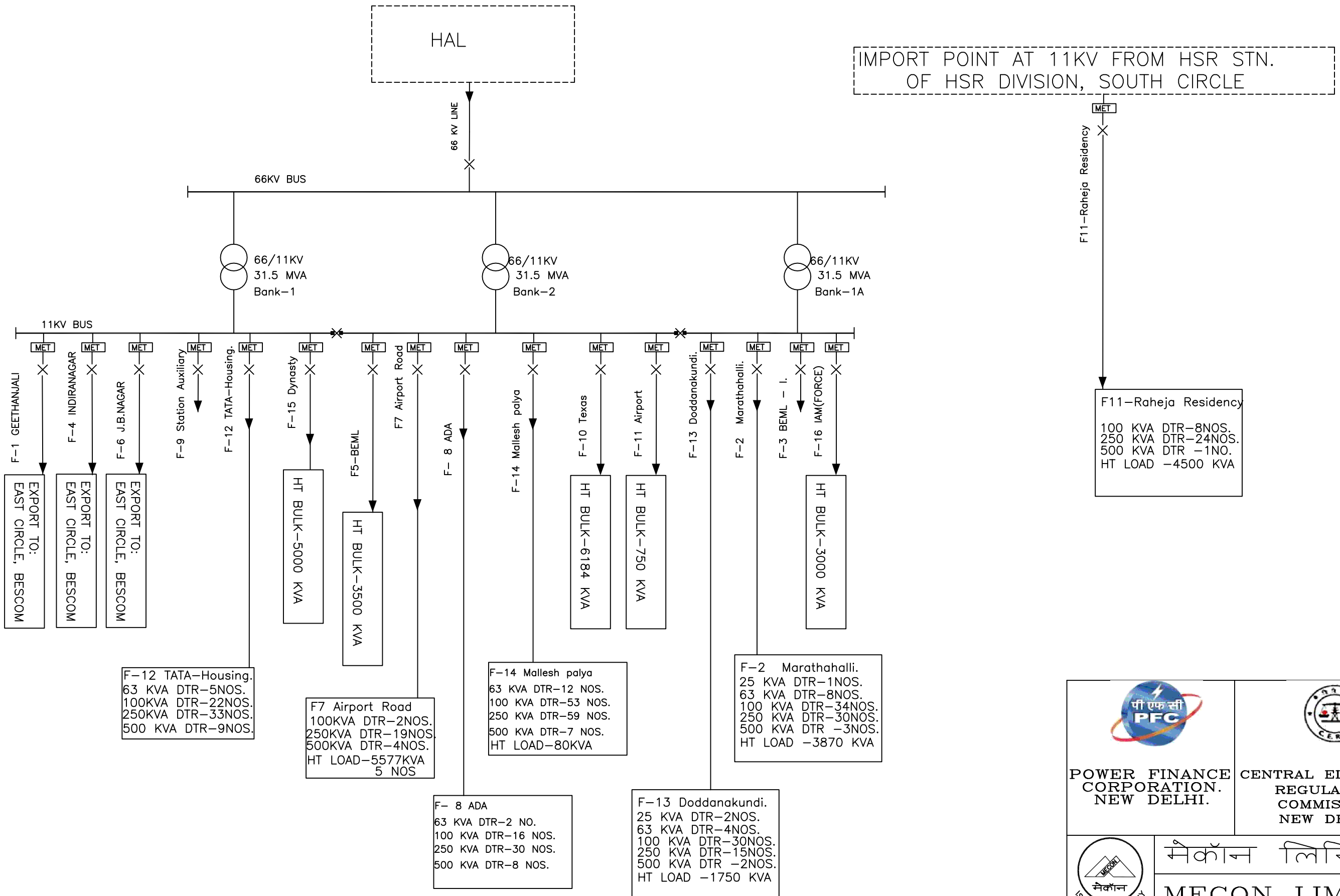

POWER FINANCE CORPORATION. NEW DELHI.

CENTRAL ELECTRICITY REGULATORY COMMISSION. NEW DELHI.

मेकॉन लिमिटेड

MECON LIMITED

ISO 9001 COMPANY

NOTE: –

THIS DRAWING PREPARED BASED ON FIRST HAND INFORMATION RECEIVED FROM BESCOM FOR SELECTED CIRCLE AND OUR FIELD VISIT.

REV. NO.	DATE	ZONE	DESCRIPTION	BY	VERIFIED

REVISIONS

REFERENCES | DRG. NO.

THIS DRAWING IS THE PROPERTY OF MECON AND IS ISSUED FOR THE SPECIFIC PROJECT MENTIONED THEREIN. THIS IS NOT TO BE COPIED OR USED FOR OTHER PROJECTS UNLESS EXPRESSLY PERMITTED BY MECON.

SECTION	ELECTRICAL
LOCATION	KOLKATA
DESIGNED	J DASGUPTA
DRAWN	A SENGUPTA
CHECKED AND VERIFIED	RAMESH IYER
APPROVED	PRADIP ROY

ASSESMENT OF COMPONENT WISE AT&C LOSS FOR KARNATAKA.

SUB-STATION SINLE LINE DIAGRAM WITH 11KV FEEDER DETAILS FOR KORAMANGALA (KML) DIVISION UNDER B'LORE SOUTH CIRCLE.

SCALE – N.T.S.

DRG.NO.MEC/19.56/Q707/BSC/ID/003

SHEET 6 OF 11

REV. 0

REV./SEC.

CONCURRED BY

DRG.NO.MEC/19.56/Q707/BSC/ID/003

KML DIVISION

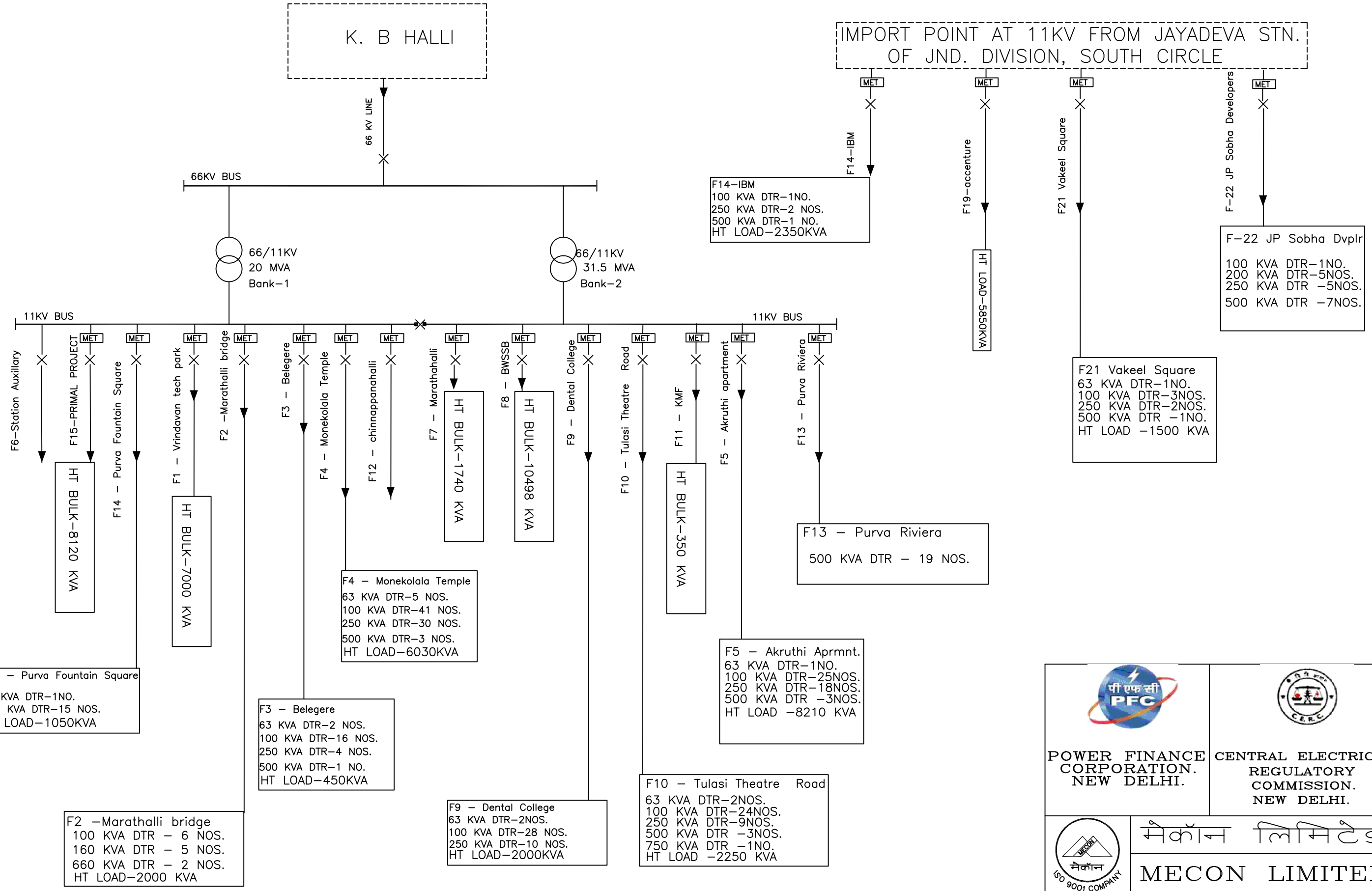

POWER FINANCE CORPORATION. NEW DELHI.

CENTRAL ELECTRICITY REGULATORY COMMISSION. NEW DELHI.

मेकॉन लिमिटेड

MECON LIMITED

NOTE: –

THIS DRAWING PREPARED BASED ON FIRST HAND INFORMATION RECEIVED FROM BESCOM FOR SELECTED CIRCLE AND OUR FIELD VISIT.

REV.	DATE	ZONE	DESCRIPTION	BY	VERIFIED

REVISIONS

REFERENCES | DRG. NO.

THIS DRAWING IS THE PROPERTY OF MECON AND IS ISSUED FOR THE SPECIFIC PROJECT MENTIONED THEREIN. THIS IS NOT TO BE COPIED OR USED FOR OTHER PROJECTS UNLESS EXPRESSLY PERMITTED BY MECON.

CONCURRED BY

SECTION	ELECTRICAL
LOCATION	KOLKATA
DESIGNED	J DASGUPTA
DRAWN	A SENGUPTA
CHECKED AND VERIFIED	RAMESH IYER
APPROVED	PRADIP ROY

ASSESMENT OF COMPONENT WISE AT&C LOSS FOR KARNATAKA.

SUB-STATION SINLE LINE DIAGRAM WITH 11KV FEEDER DETAILS FOR KORAMANGALA (KML) DIVISION UNDER B'LORE SOUTH CIRCLE.

SCALE – N.T.S.

DRG.NO.MEC/19.56/Q707/BSC/ID/003

SHEET 7 OF 11

REV. 0

DRG.NO.MEC/19.56/Q707/BSC/ID/003

KML DIVISION

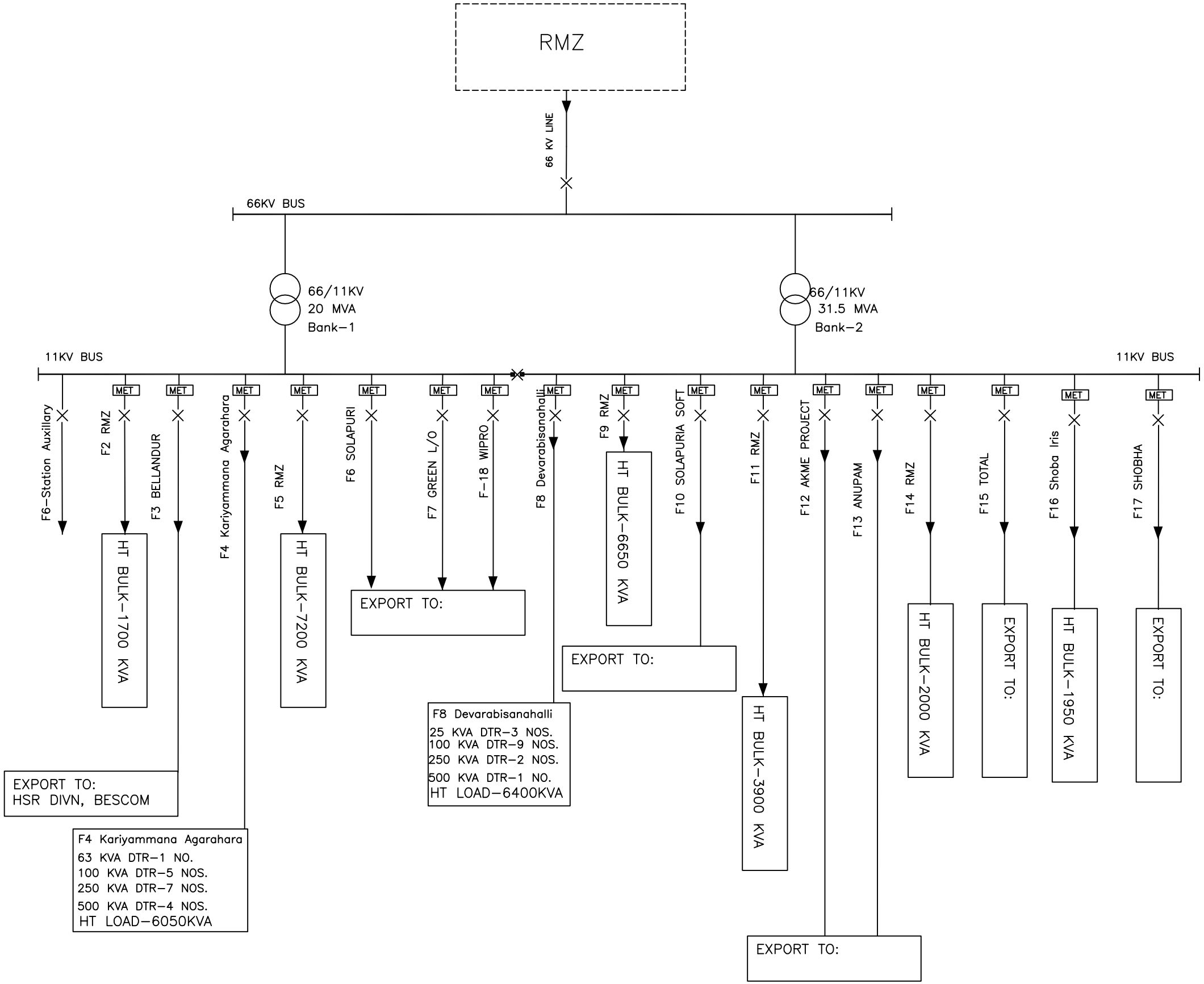

POWER FINANCE CORPORATION. NEW DELHI.

CENTRAL ELECTRICITY REGULATORY COMMISSION. NEW DELHI.

मेकॉन लिमिटेड

MECON LIMITED

NOTE: –

THIS DRAWING PREPARED BASED ON FIRST HAND INFORMATION RECEIVED FROM BESCOM FOR SELECTED CIRCLE AND OUR FIELD VISIT.

REV. NO.	DATE	ZONE	DESCRIPTION	BY	VERIFIED

REVISIONS

CONCURRED BY

REV./SEC.

REFERENCES | DRG. NO.

THIS DRAWING IS THE PROPERTY OF MECON AND IS ISSUED FOR THE SPECIFIC PROJECT MENTIONED THEREIN. THIS IS NOT TO BE COPIED OR USED FOR OTHER PROJECTS UNLESS EXPRESSLY PERMITTED BY MECON.

SECTION	ELECTRICAL
LOCATION	KOLKATA
DESIGNED	J DASGUPTA
DRAWN	A SENGUPTA
CHECKED AND VERIFIED	RAMESH IYER
APPROVED	PRADIP ROY

ASSESMENT OF COMPONENT WISE AT&C LOSS FOR KARNATAKA.

SUB-STATION SINLE LINE DIAGRAM WITH 11KV FEEDER DETAILS FOR KORAMANGALA (KML) DIVISION UNDER B'LORE SOUTH CIRCLE.

SCALE – N.T.S.

DRG.NO.MEC/19.56/Q707/BSC/ID/003

SHEET 8 OF 11

REV. 0

DRG.NO.MEC/19.56/Q707/BSC/ID/003

KML DIVISION

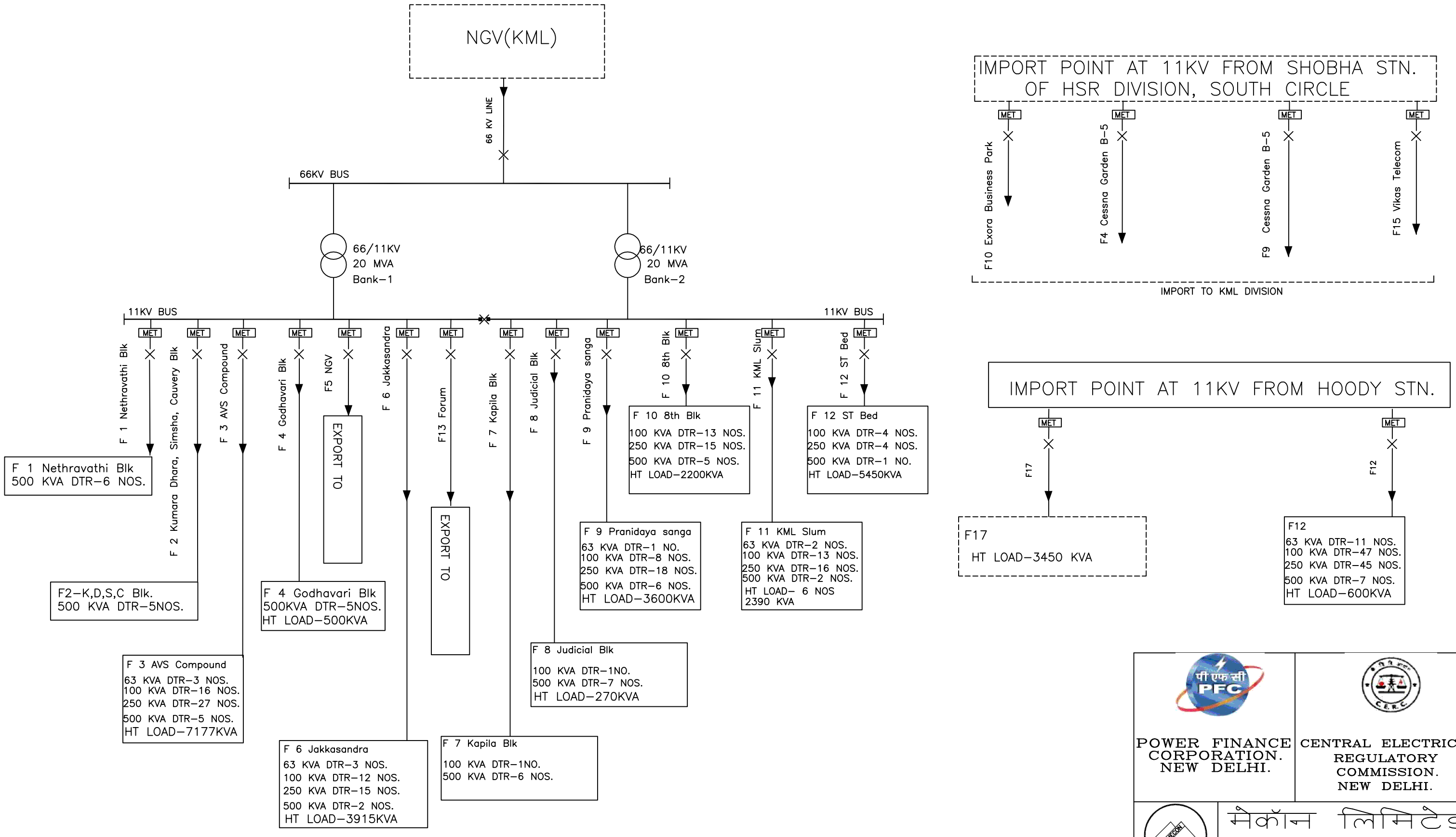

POWER FINANCE CORPORATION. NEW DELHI.

CENTRAL ELECTRICITY REGULATORY COMMISSION. NEW DELHI.

मेकॉन लिमिटेड

MECON LIMITED

NOTE: –

THIS DRAWING PREPARED BASED ON FIRST HAND INFORMATION RECEIVED FROM BESCOM FOR SELECTED CIRCLE AND OUR FIELD VISIT.

REV. NO.	DATE	ZONE	DESCRIPTION	BY	VERIFIED

REVISIONS

REFERENCES | DRG. NO.

THIS DRAWING IS THE PROPERTY OF MECON AND IS ISSUED FOR THE SPECIFIC PROJECT MENTIONED THEREIN. THIS IS NOT TO BE COPIED OR USED FOR OTHER PROJECTS UNLESS EXPRESSLY PERMITTED BY MECON.

SECTION	ELECTRICAL
LOCATION	KOLKATA
DESIGNED	J DASGUPTA
DRAWN	A SENGUPTA
CHECKED AND VERIFIED	RAMESH IYER
APPROVED	PRADIP ROY

ASSESMENT OF COMPONENT WISE AT&C LOSS FOR KARNATAKA.

SUB-STATION SINLE LINE DIAGRAM WITH 11KV FEEDER DETAILS FOR KORAMANGALA (KML) DIVISION UNDER B'LORE SOUTH CIRCLE.

SCALE – N.T.S.

DRG.NO.MEC/19.56/Q707/BSC/ID/003

SHEET 9 OF 11 | REV. 1

CONCURRED BY

REV. / SEC.

DRG.NO.MEC/19.56/Q707/BSC/ID/003

KML DIVISION

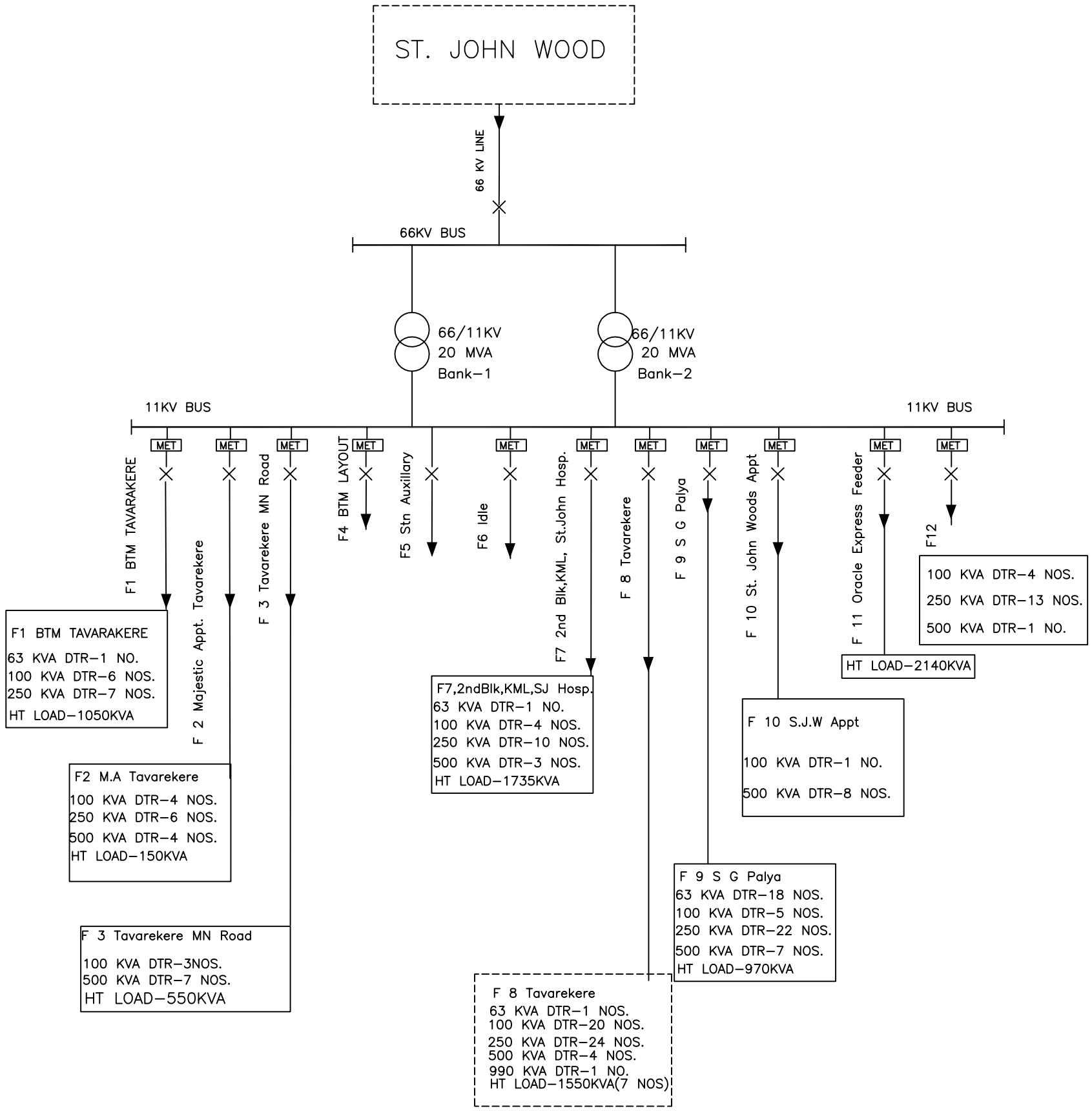

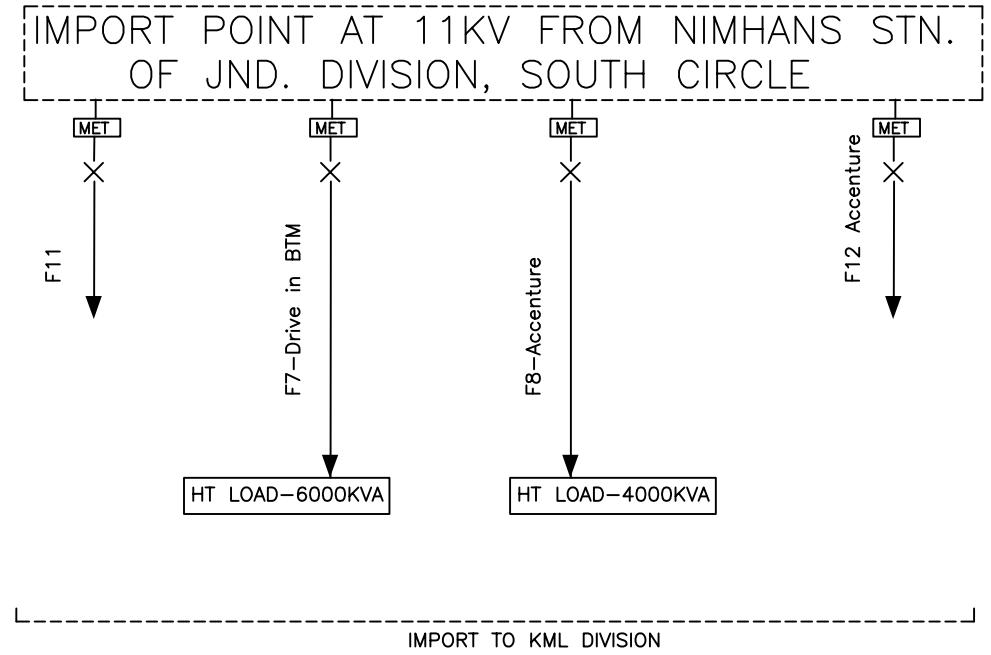

POWER FINANCE CORPORATION. NEW DELHI.

CENTRAL ELECTRICITY REGULATORY COMMISSION. NEW DELHI.

मेकॉन लिमिटेड

MECON LIMITED

NOTE: –

THIS DRAWING PREPARED BASED ON FIRST HAND INFORMATION RECEIVED FROM BESCOM FOR SELECTED CIRCLE AND OUR FIELD VISIT.

REV. NO.	DATE	ZONE	DESCRIPTION	BY	VERIFIED

REVISIONS

REV./SEC. — CONCURRED BY

REFERENCES — DRG. NO.

THIS DRAWING IS THE PROPERTY OF MECON AND IS ISSUED FOR THE SPECIFIC PROJECT MENTIONED THEREIN. THIS IS NOT TO BE COPIED OR USED FOR OTHER PROJECTS UNLESS EXPRESSLY PERMITTED BY MECON.

SECTION	ELECTRICAL
LOCATION	KOLKATA
DESIGNED	J DASGUPTA
DRAWN	A SENGUPTA
CHECKED AND VERIFIED	RAMESH IYER
APPROVED	PRADIP ROY

ASSESMENT OF COMPONENT WISE AT&C LOSS FOR KARNATAKA.

SUB-STATION SINLE LINE DIAGRAM WITH 11KV FEEDER DETAILS FOR KORAMANGALA (KML) DIVISION UNDER B'LORE SOUTH CIRCLE.

SCALE – N.T.S.

DRG.NO.MEC/19.56/Q707/BSC/ID/003

SHEET 10 OF 11 — REV. 0

DRG.NO.MEC/19.56/Q707/BSC/ID/003

KML DIVISION

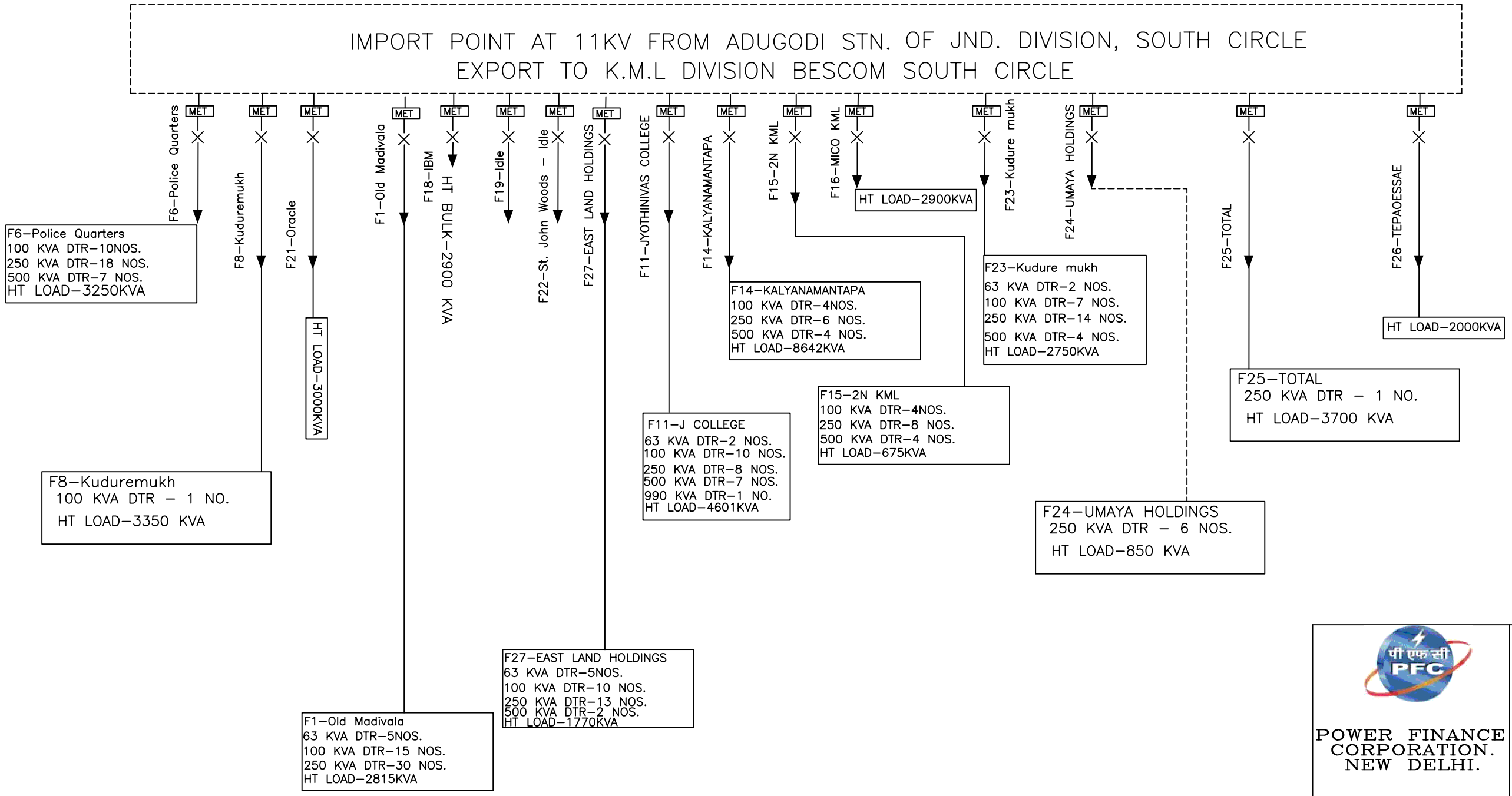

POWER FINANCE CORPORATION. NEW DELHI.

CENTRAL ELECTRICITY REGULATORY COMMISSION. NEW DELHI.

मेकॉन लिमिटेड

MECON LIMITED

NOTE: –

THIS DRAWING PREPARED BASED ON FIRST HAND INFORMATION RECEIVED FROM BESCOM FOR SELECTED CIRCLE AND OUR FIELD VISIT.

REV. NO.	DATE	ZONE	DESCRIPTION	BY	VERIFIED

REVISIONS

REV./SEC. — CONCURRED BY

REFERENCES — DRG. NO.

THIS DRAWING IS THE PROPERTY OF MECON AND IS ISSUED FOR THE SPECIFIC PROJECT MENTIONED THEREIN. THIS IS NOT TO BE COPIED OR USED FOR OTHER PROJECTS UNLESS EXPRESSLY PERMITTED BY MECON.

SECTION	ELECTRICAL
LOCATION	KOLKATA
DESIGNED	J DASGUPTA
DRAWN	A SENGUPTA
CHECKED AND VERIFIED	RAMESH IYER
APPROVED	PRADIP ROY

ASSESMENT OF COMPONENT WISE AT&C LOSS FOR KARNATAKA.

SUB–STATION SINLE LINE DIAGRAM WITH 11KV FEEDER DETAILS FOR KORAMANGALA (KML) DIVISION UNDER B'LORE SOUTH CIRCLE.

SCALE – N.T.S. | SHEET 11 OF 11 | REV. 0

DRG.NO.MEC/19.56/Q707/BSC/ID/003

DRAWING DESCRIPTION : SUB-STATION SLD WITH 11KV FEEDER DETAILS FOR HSR DIVISION UNDER BANGALORE SOUTH CIRCLE

DRAWING NO. : MEC/19.56/Q707/BSC/ID/004

NO. OF SHEETS : 10

DRG.NO.MEC/19.56/Q707/BSC/ID/004

HSR DIVISION

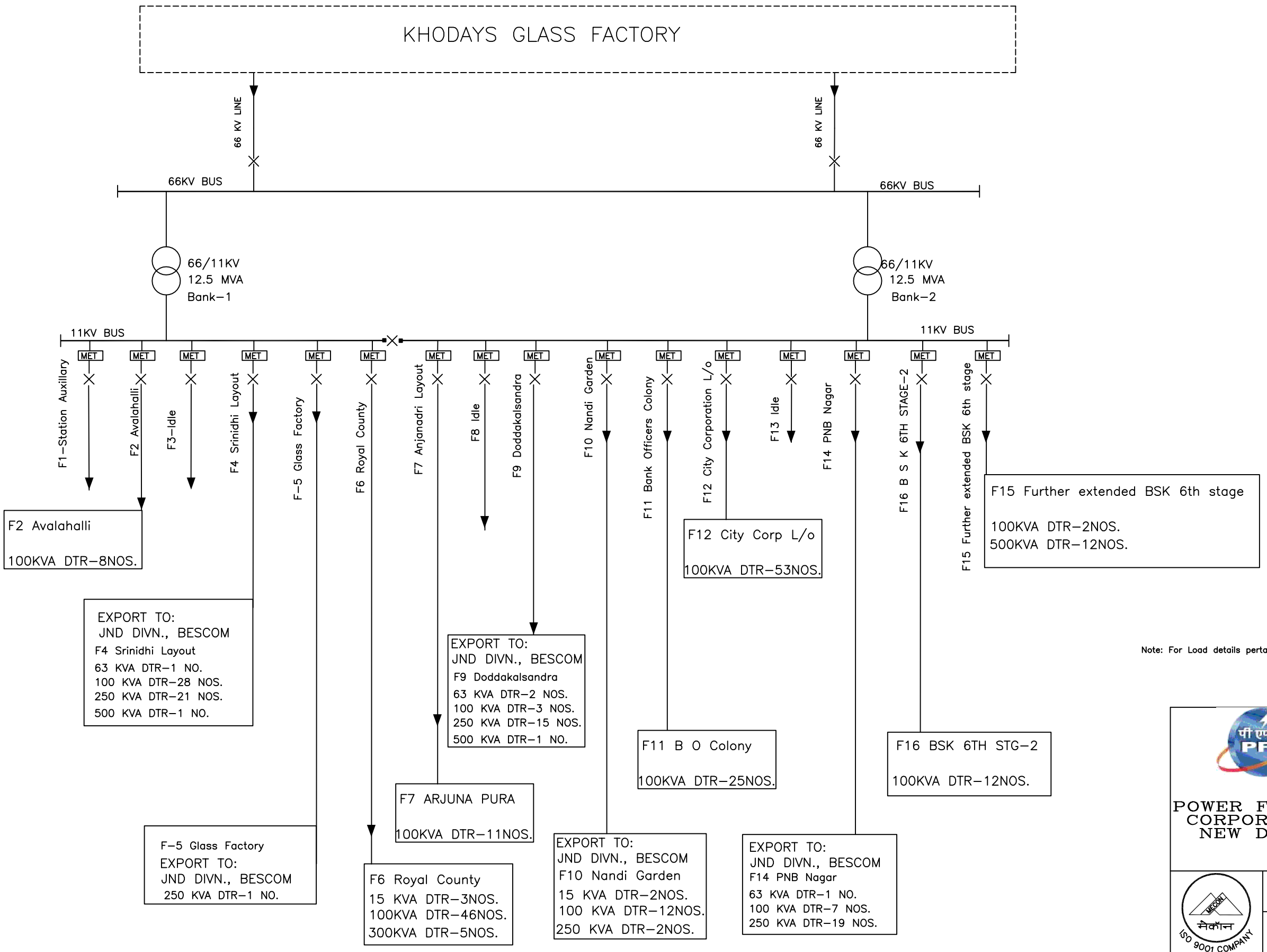

Note: For Load details pertaining to export points, refer drg. for concerned division.

POWER FINANCE CORPORATION. NEW DELHI.

CENTRAL ELECTRICITY REGULATORY COMMISSION. NEW DELHI.

मेकॉन लिमिटेड

MECON LIMITED

NOTE: –

THIS DRAWING PREPARED BASED ON FIRST HAND INFORMATION RECEIVED FROM BESCOM FOR SELECTED CIRCLE AND OUR FIELD VISIT.

REV. NO.	DATE	ZONE	DESCRIPTION	BY	VERIFIED

REVISIONS

REFERENCES | DRG. NO.

THIS DRAWING IS THE PROPERTY OF MECON AND IS ISSUED FOR THE SPECIFIC PROJECT MENTIONED THEREIN. THIS IS NOT TO BE COPIED OR USED FOR OTHER PROJECTS UNLESS EXPRESSLY PERMITTED BY MECON.

REV. / SEC. | CONCURRED BY

SECTION	ELECTRICAL
LOCATION	KOLKATA
DESIGNED	J DASGUPTA
DRAWN	A SENGUPTA
CHECKED AND VERIFIED	RAMESH IYER
APPROVED	PRADIP ROY

ASSESMENT OF COMPONENT WISE AT&C LOSS FOR KARNATAKA.

SUB-STATION SINLE LINE DIAGRAM WITH 11KV FEEDER DETAILS FOR HSR DIVISION UNDER B'LORE SOUTH CIRCLE.

SCALE – N.T.S.

DRG.NO.MEC/19.56/Q707/BSC/ID/004

SHEET 1 OF 10

REV. 0

DRG.NO.MEC/19.56/Q707/BSC/ID/004

HSR DIVISION

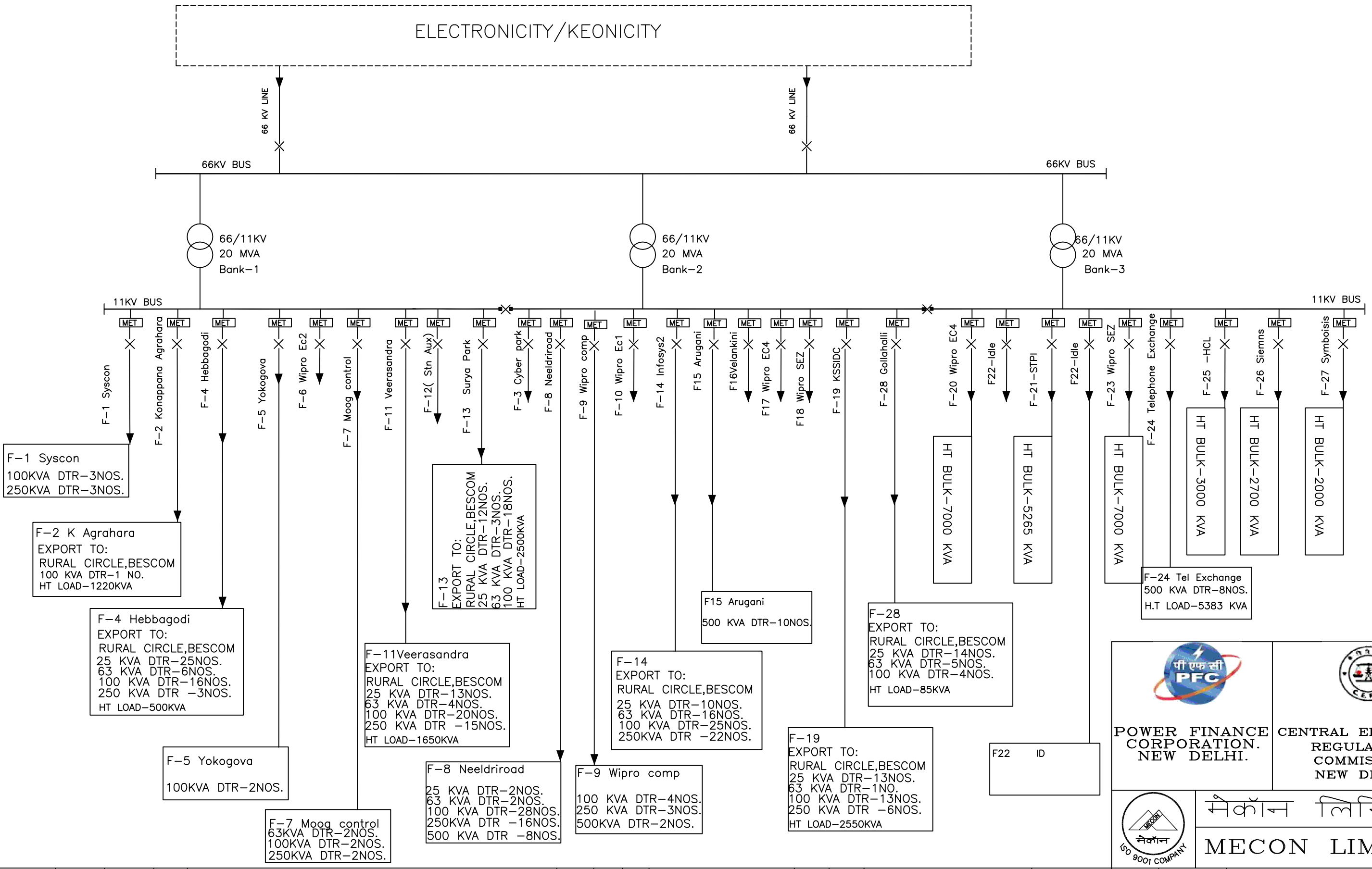

POWER FINANCE CORPORATION. NEW DELHI.

CENTRAL ELECTRICITY REGULATORY COMMISSION. NEW DELHI.

मेकॉन लिमिटेड

MECON LIMITED

NOTE: –

THIS DRAWING PREPARED BASED ON FIRST HAND INFORMATION RECEIVED FROM BESCOM FOR SELECTED CIRCLE AND OUR FIELD VISIT.

REV. NO.	DATE	ZONE	DESCRIPTION	BY	VERIFIED

REVISIONS

REFERENCES | DRG. NO.

THIS DRAWING IS THE PROPERTY OF MECON AND IS ISSUED FOR THE SPECIFIC PROJECT MENTIONED THEREIN. THIS IS NOT TO BE COPIED OR USED FOR OTHER PROJECTS UNLESS EXPRESSLY PERMITTED BY MECON.

REV. / SEC. | CONCURRED BY

SECTION	ELECTRICAL
LOCATION	KOLKATA
DESIGNED	J DASGUPTA
DRAWN	A SENGUPTA
CHECKED AND VERIFIED	RAMESH IYER
APPROVED	PRADIP ROY

ASSESMENT OF COMPONENT WISE AT&C LOSS FOR KARNATAKA.

SUB-STATION SINLE LINE DIAGRAM WITH 11KV FEEDER DETAILS FOR HSR DIVISION UNDER B'LORE SOUTH CIRCLE.

SCALE – N.T.S.

DRG.NO.MEC/19.56/Q707/BSC/ID/004

SHEET 2 OF 10

REV. 0

DRG.NO.MEC/19.56/Q707/BSC/ID/004

HSR DIVISION

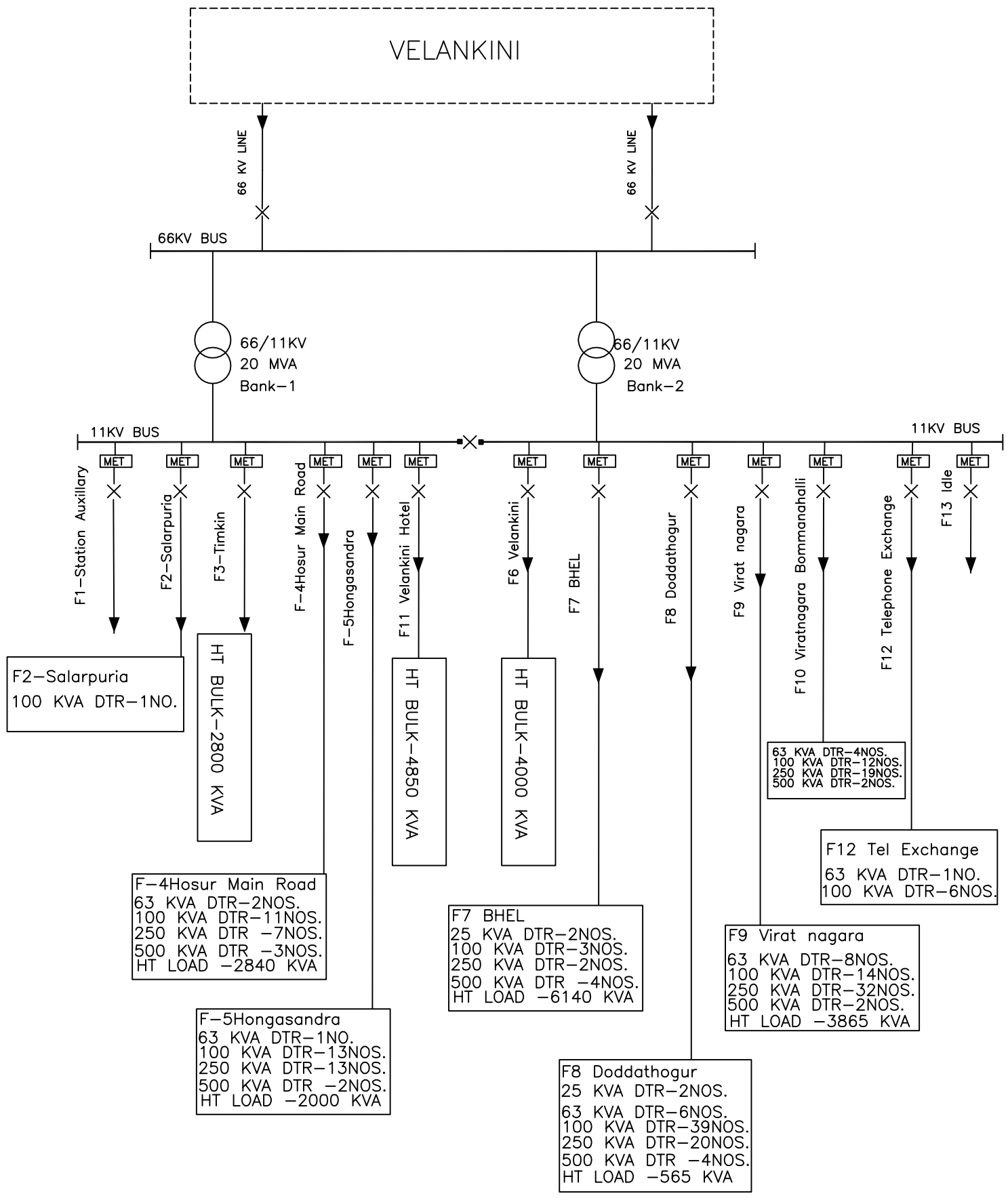

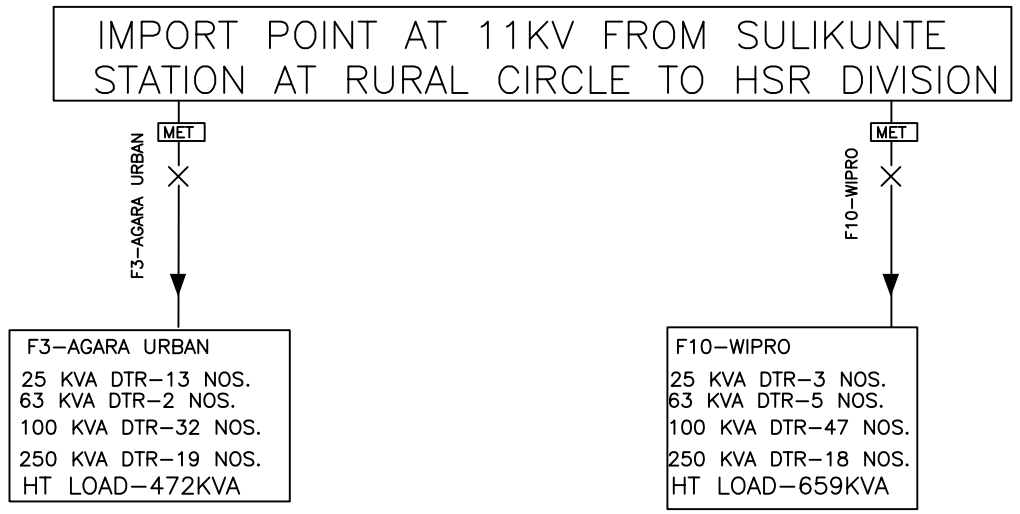

POWER FINANCE CORPORATION. NEW DELHI.

CENTRAL ELECTRICITY REGULATORY COMMISSION. NEW DELHI.

मेकॉन लिमिटेड

MECON LIMITED

NOTE: –

THIS DRAWING PREPARED BASED ON FIRST HAND INFORMATION RECEIVED FROM BESCOM FOR SELECTED CIRCLE AND OUR FIELD VISIT.

REV. NO.	DATE	ZONE	DESCRIPTION	BY	VERIFIED

REVISIONS

REFERENCES | DRG. NO.

THIS DRAWING IS THE PROPERTY OF MECON AND IS ISSUED FOR THE SPECIFIC PROJECT MENTIONED THEREIN. THIS IS NOT TO BE COPIED OR USED FOR OTHER PROJECTS UNLESS EXPRESSLY PERMITTED BY MECON.

SECTION	ELECTRICAL
LOCATION	KOLKATA
DESIGNED	J DASGUPTA
DRAWN	A SENGUPTA
CHECKED AND VERIFIED	RAMESH IYER
APPROVED	PRADIP ROY

ASSESMENT OF COMPONENT WISE AT&C LOSS FOR KARNATAKA.

SUB-STATION SINLE LINE DIAGRAM WITH 11KV FEEDER DETAILS FOR HSR DIVISION UNDER B'LORE SOUTH CIRCLE.

SCALE – N.T.S.

DRG.NO.MEC/19.56/Q707/BSC/ID/004

SHEET 3 OF 10

REV. 0

REV./SEC.

CONCURRED BY

DRG.NO.MEC/19.56/Q707/BSC/ID/004

HSR DIVISION

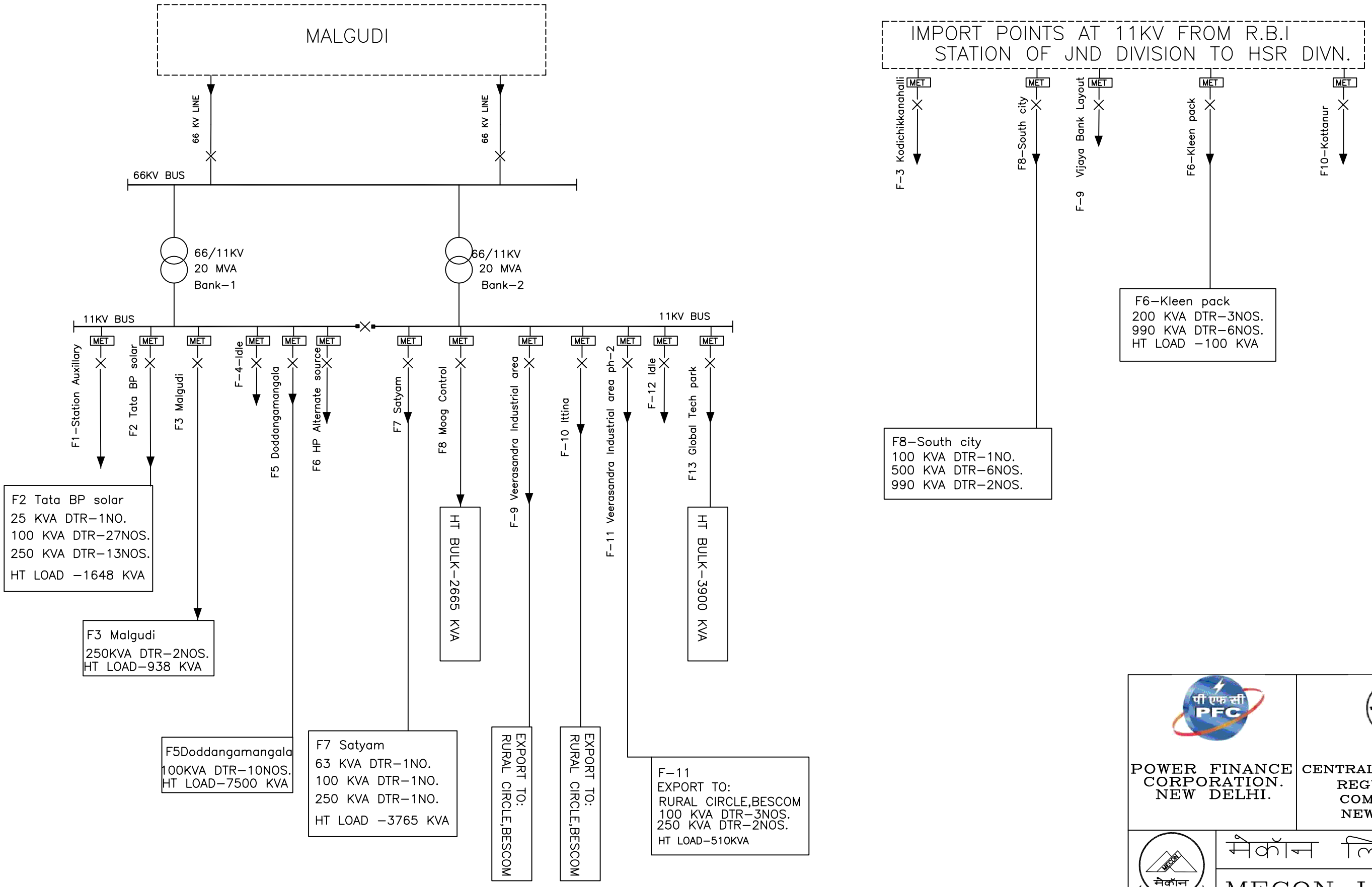

POWER FINANCE CORPORATION. NEW DELHI.

CENTRAL ELECTRICITY REGULATORY COMMISSION. NEW DELHI.

मेकॉन लिमिटेड

MECON LIMITED

NOTE: –

THIS DRAWING PREPARED BASED ON FIRST HAND INFORMATION RECEIVED FROM BESCOM FOR SELECTED CIRCLE AND OUR FIELD VISIT.

REV. NO.	DATE	ZONE	DESCRIPTION	BY	VERIFIED

REVISIONS

REFERENCES | DRG. NO.

THIS DRAWING IS THE PROPERTY OF MECON AND IS ISSUED FOR THE SPECIFIC PROJECT MENTIONED THEREIN. THIS IS NOT TO BE COPIED OR USED FOR OTHER PROJECTS UNLESS EXPRESSLY PERMITTED BY MECON.

SECTION	ELECTRICAL
LOCATION	KOLKATA
DESIGNED	J DASGUPTA
DRAWN	A SENGUPTA
CHECKED AND VERIFIED	RAMESH IYER
APPROVED	PRADIP ROY

ASSESMENT OF COMPONENT WISE AT&C LOSS FOR KARNATAKA.

SUB-STATION SINLE LINE DIAGRAM WITH 11KV FEEDER DETAILS FOR HSR DIVISION UNDER B'LORE SOUTH CIRCLE.

SCALE – N.T.S.

DRG.NO.MEC/19.56/Q707/BSC/ID/004

SHEET 4 OF 10

REV. 0

REV./SEC.

CONCURRED BY

DRG.NO.MEC/19.56/Q707/BSC/ID/004

HSR DIVISION

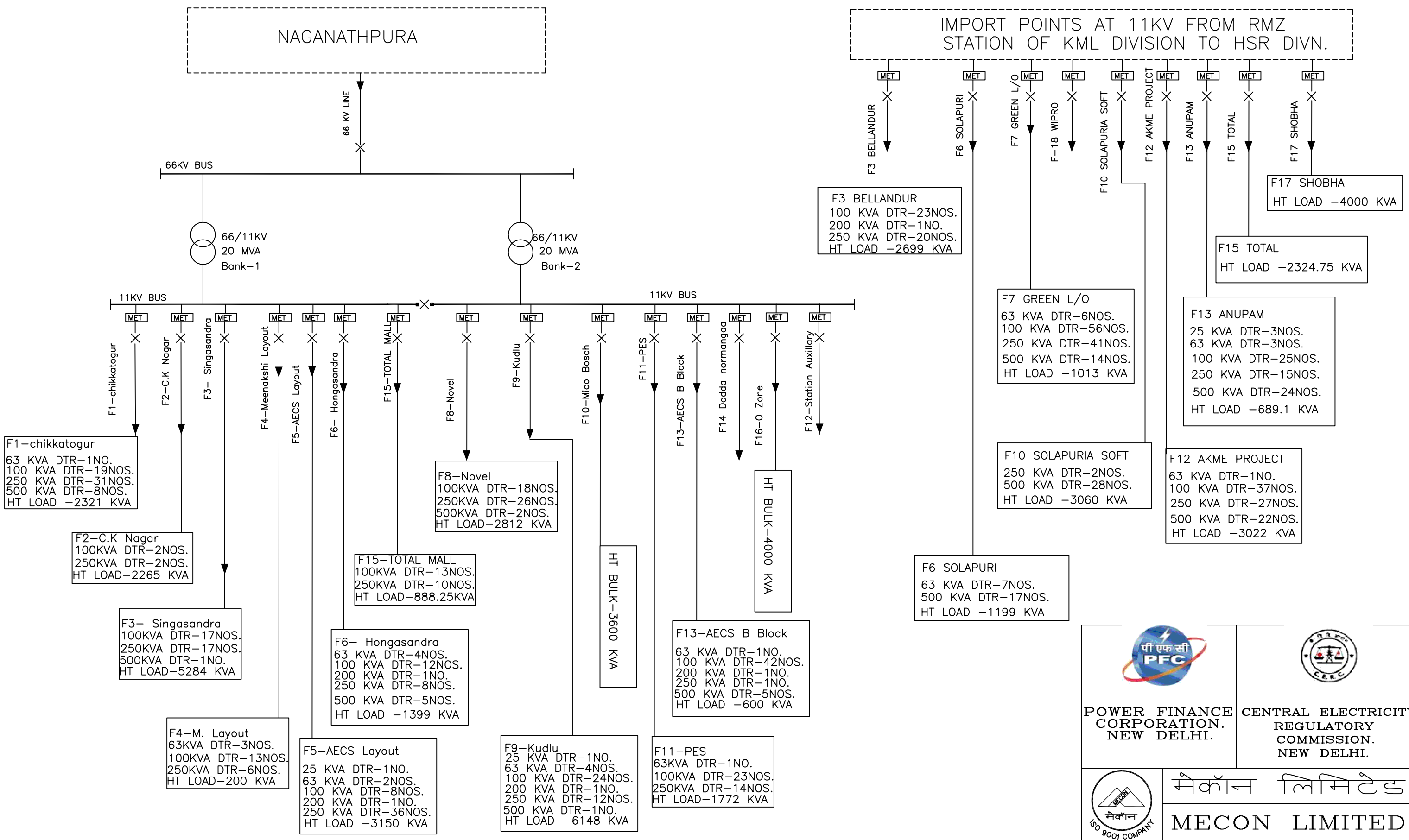

POWER FINANCE CORPORATION. NEW DELHI.

CENTRAL ELECTRICITY REGULATORY COMMISSION. NEW DELHI.

मेकॉन लिमिटेड

MECON LIMITED

NOTE: –

THIS DRAWING PREPARED BASED ON FIRST HAND INFORMATION RECEIVED FROM BESCOM FOR SELECTED CIRCLE AND OUR FIELD VISIT.

REV. NO.	DATE	ZONE	DESCRIPTION	BY	VERIFIED

REVISIONS

REV./SEC. — CONCURRED BY

REFERENCES — DRG. NO.

THIS DRAWING IS THE PROPERTY OF MECON AND IS ISSUED FOR THE SPECIFIC PROJECT MENTIONED THEREIN. THIS IS NOT TO BE COPIED OR USED FOR OTHER PROJECTS UNLESS EXPRESSLY PERMITTED BY MECON.

SECTION	ELECTRICAL
LOCATION	KOLKATA
DESIGNED	J DASGUPTA
DRAWN	A SENGUPTA
CHECKED AND VERIFIED	RAMESH IYER
APPROVED	PRADIP ROY

ASSESMENT OF COMPONENT WISE AT&C LOSS FOR KARNATAKA.

SUB-STATION SINLE LINE DIAGRAM WITH 11KV FEEDER DETAILS FOR HSR DIVISION UNDER B'LORE SOUTH CIRCLE.

SCALE – N.T.S.

DRG.NO.MEC/19.56/Q707/BSC/ID/004

SHEET 5 OF 10 — REV. 0

DRG.NO.MEC/19.56/Q707/BSC/ID/004

HSR DIVISION

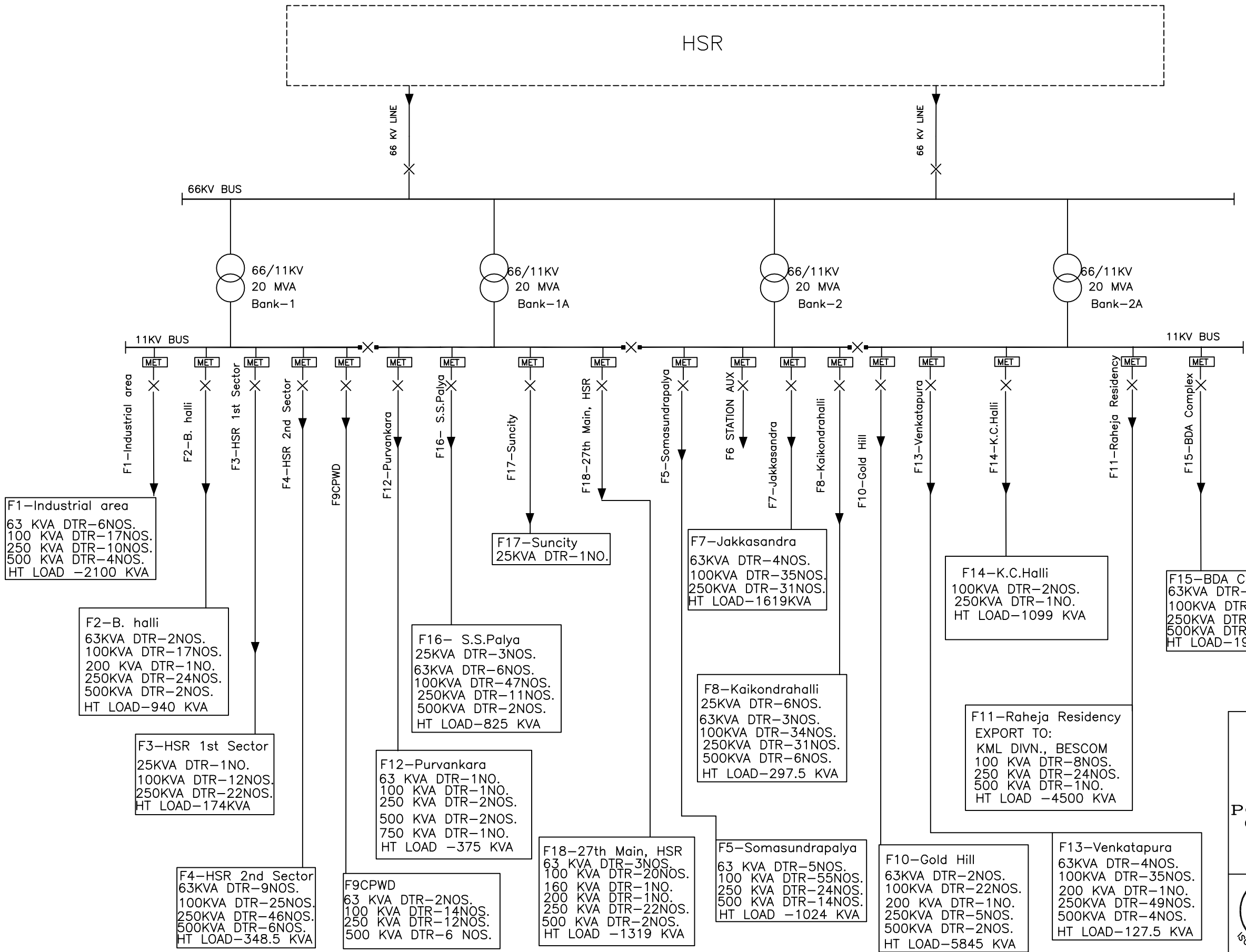

POWER FINANCE CORPORATION. NEW DELHI.

CENTRAL ELECTRICITY REGULATORY COMMISSION. NEW DELHI.

मेकॉन लिमिटेड

MECON LIMITED

ISO 9001 COMPANY

NOTE: –

THIS DRAWING PREPARED BASED ON FIRST HAND INFORMATION RECEIVED FROM BESCOM FOR SELECTED CIRCLE AND OUR FIELD VISIT.

REV. NO.	DATE	ZONE	DESCRIPTION	BY	VERIFIED

REVISIONS

REFERENCES | DRG. NO.

THIS DRAWING IS THE PROPERTY OF MECON AND IS ISSUED FOR THE SPECIFIC PROJECT MENTIONED THEREIN. THIS IS NOT TO BE COPIED OR USED FOR OTHER PROJECTS UNLESS EXPRESSLY PERMITTED BY MECON.

REV./SEC. | CONCURRED BY

SECTION	ELECTRICAL
LOCATION	KOLKATA
DESIGNED	J DASGUPTA
DRAWN	A SENGUPTA
CHECKED AND VERIFIED	RAMESH IYER
APPROVED	PRADIP ROY

ASSESMENT OF COMPONENT WISE AT&C LOSS FOR KARNATAKA.

SUB-STATION SINLE LINE DIAGRAM WITH 11KV FEEDER DETAILS FOR HSR DIVISION UNDER B'LORE SOUTH CIRCLE.

SCALE – N.T.S. | SHEET 6 OF 10 | REV. 0

DRG.NO.MEC/19.56/Q707/BSC/ID/004

DRG.NO.MEC/19.56/Q707/BSC/ID/004

HSR DIVISION

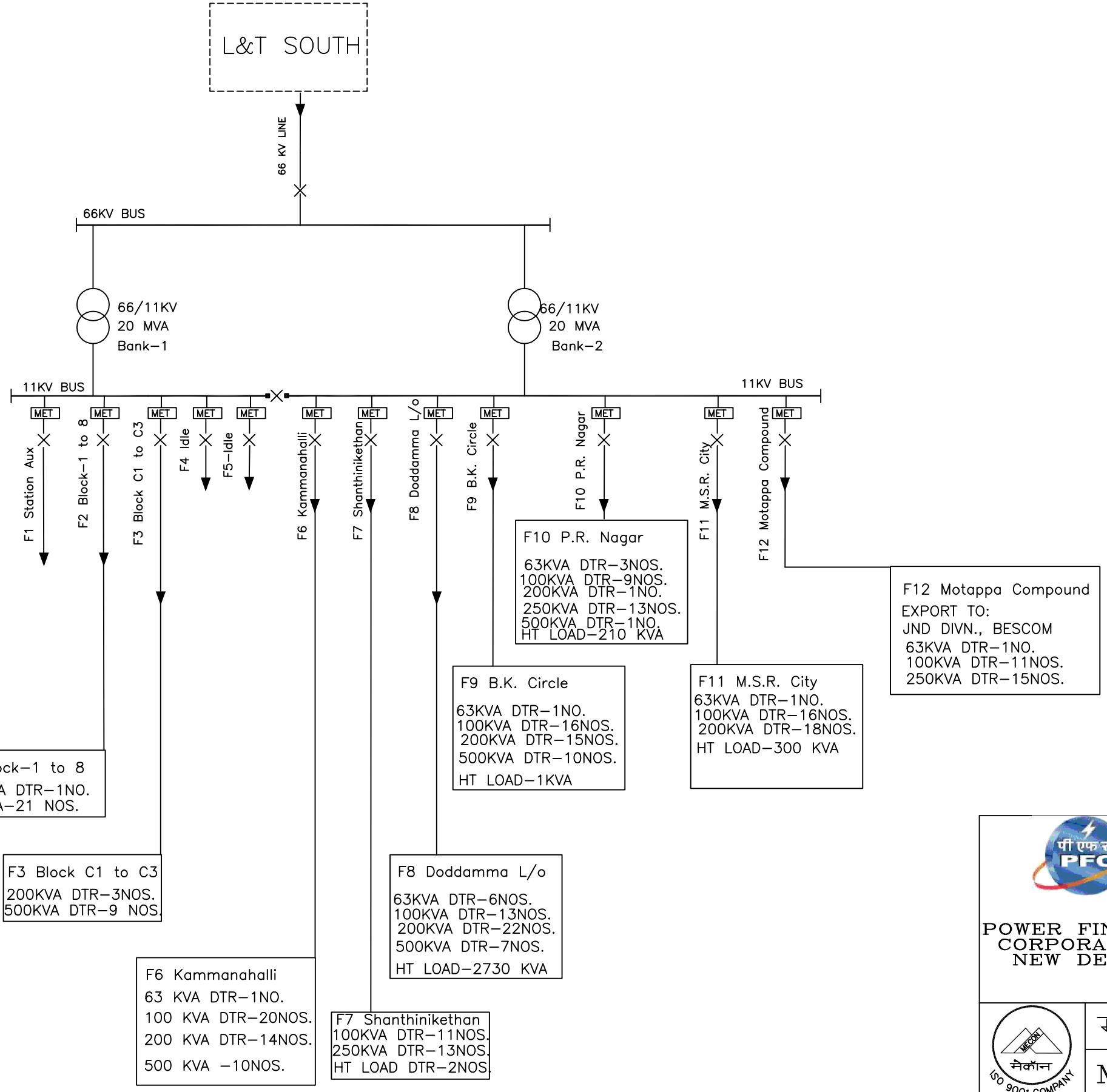

POWER FINANCE CORPORATION. NEW DELHI.

CENTRAL ELECTRICITY REGULATORY COMMISSION. NEW DELHI.

मेकॉन लिमिटेड

MECON LIMITED

NOTE: –

THIS DRAWING PREPARED BASED ON FIRST HAND INFORMATION RECEIVED FROM BESCOM FOR SELECTED CIRCLE AND OUR FIELD VISIT.

REV. NO.	DATE	ZONE	DESCRIPTION	BY	VERIFIED

REVISIONS

REV./SEC. — CONCURRED BY

REFERENCES — DRG. NO.

THIS DRAWING IS THE PROPERTY OF MECON AND IS ISSUED FOR THE SPECIFIC PROJECT MENTIONED THEREIN. THIS IS NOT TO BE COPIED OR USED FOR OTHER PROJECTS UNLESS EXPRESSLY PERMITTED BY MECON.

SECTION	ELECTRICAL
LOCATION	KOLKATA
DESIGNED	J DASGUPTA
DRAWN	A SENGUPTA
CHECKED AND VERIFIED	RAMESH IYER
APPROVED	PRADIP ROY

ASSESMENT OF COMPONENT WISE AT&C LOSS FOR KARNATAKA.

SUB-STATION SINLE LINE DIAGRAM WITH 11KV FEEDER DETAILS FOR HSR DIVISION UNDER B'LORE SOUTH CIRCLE.

SCALE – N.T.S.

DRG.NO.MEC/19.56/Q707/BSC/ID/004

SHEET 7 OF 10

REV. 0

DRG.NO.MEC/19.56/Q707/BSC/ID/004

HSR DIVISION

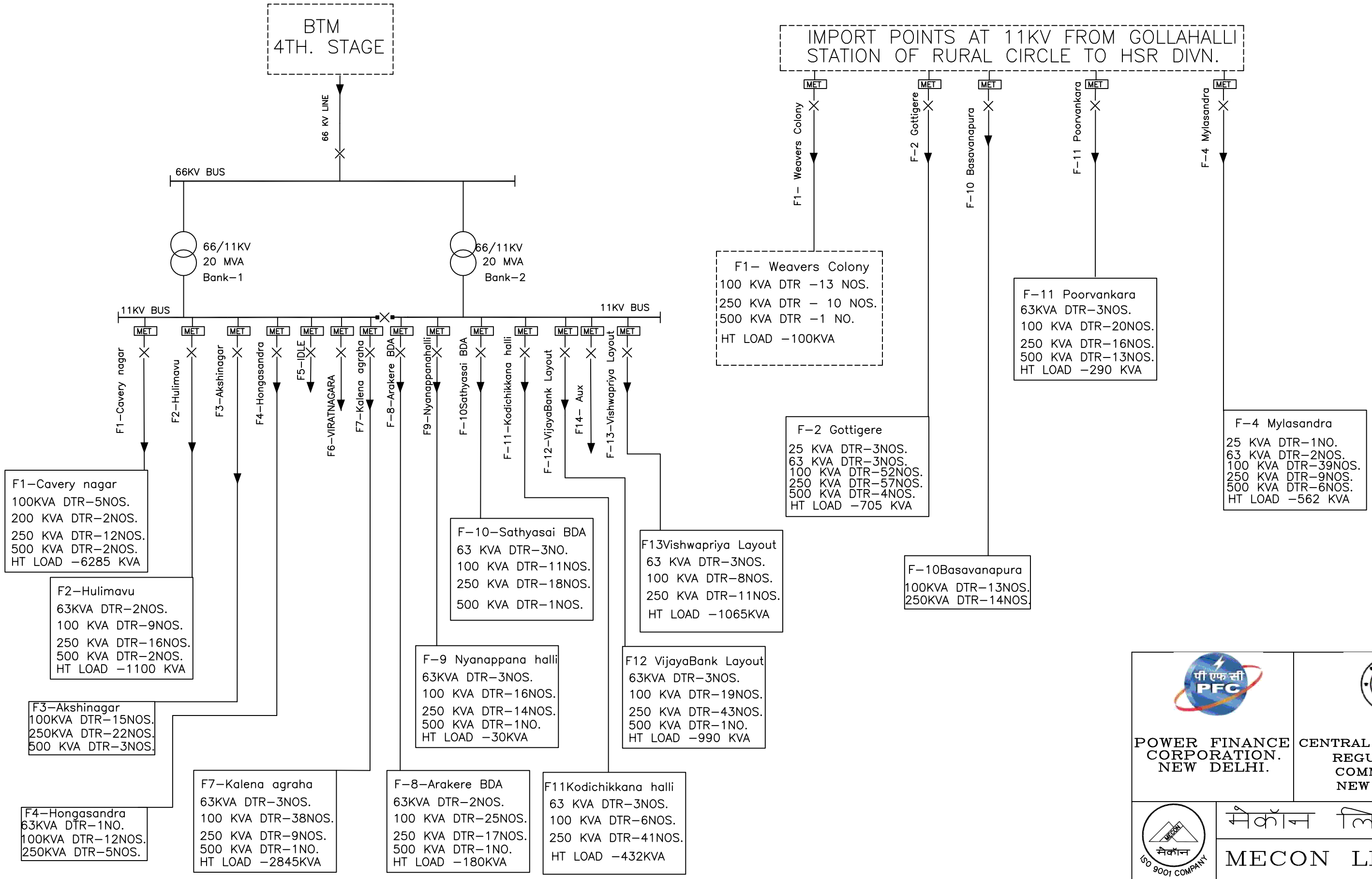

POWER FINANCE CORPORATION. NEW DELHI.

CENTRAL ELECTRICITY REGULATORY COMMISSION. NEW DELHI.

मेकॉन लिमिटेड

MECON LIMITED

NOTE: –

THIS DRAWING PREPARED BASED ON FIRST HAND INFORMATION RECEIVED FROM BESCOM FOR SELECTED CIRCLE AND OUR FIELD VISIT.

REV. NO.	DATE	ZONE	DESCRIPTION	BY	VERIFIED

REVISIONS

REFERENCES | DRG. NO.

THIS DRAWING IS THE PROPERTY OF MECON AND IS ISSUED FOR THE SPECIFIC PROJECT MENTIONED THEREIN. THIS IS NOT TO BE COPIED OR USED FOR OTHER PROJECTS UNLESS EXPRESSLY PERMITTED BY MECON.

REV. / SEC. | CONCURRED BY

SECTION	ELECTRICAL
LOCATION	KOLKATA
DESIGNED	J DASGUPTA
DRAWN	A SENGUPTA
CHECKED AND VERIFIED	RAMESH IYER
APPROVED	PRADIP ROY

ASSESMENT OF COMPONENT WISE AT&C LOSS FOR KARNATAKA.

SUB-STATION SINLE LINE DIAGRAM WITH 11KV FEEDER DETAILS FOR HSR DIVISION UNDER B'LORE SOUTH CIRCLE.

SCALE – N.T.S. | SHEET 8 OF 10 | REV. 0

DRG.NO.MEC/19.56/Q707/BSC/ID/004

HSR DIVISION

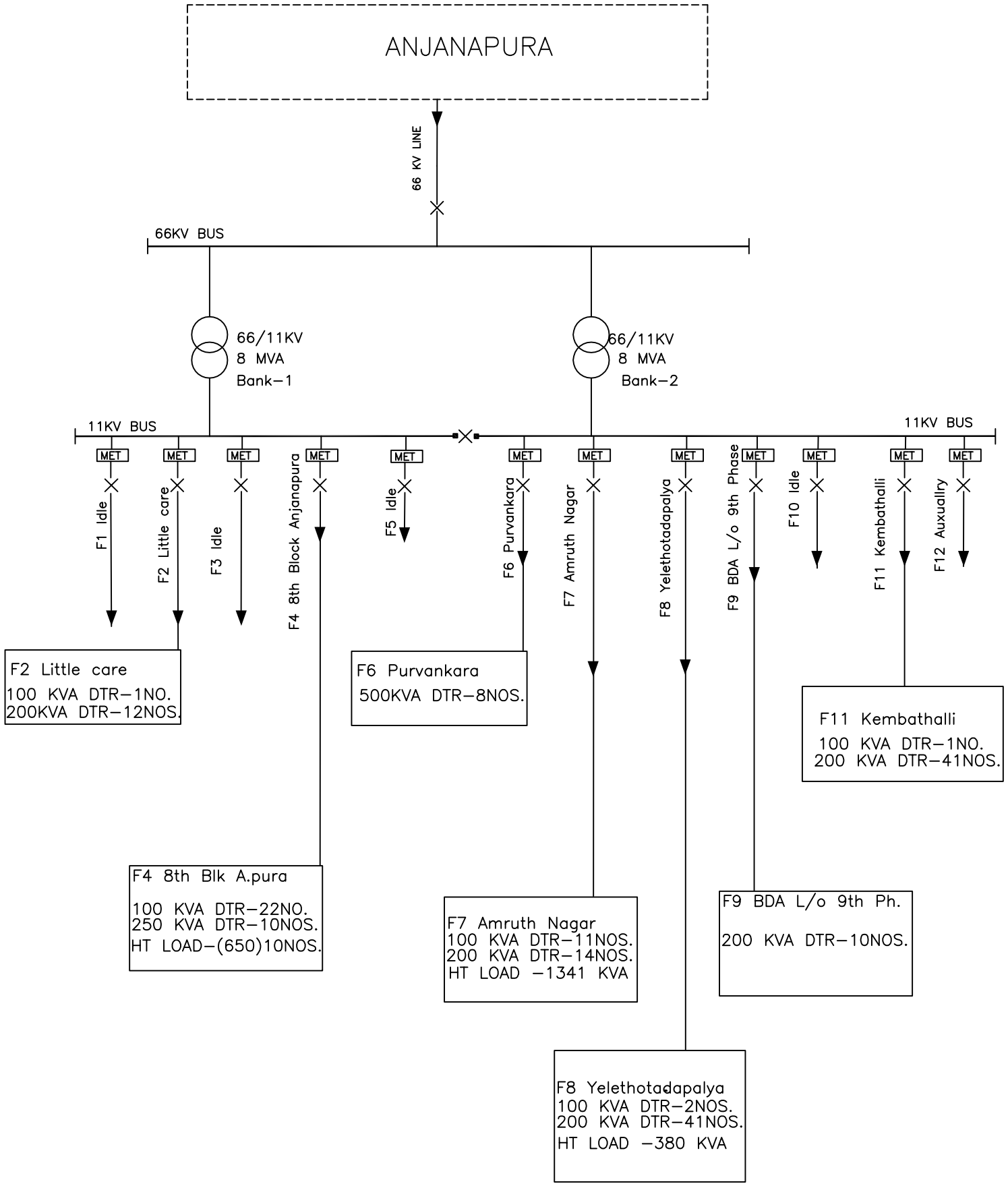

IMPORT POINT AT 11KV FROM JAYADEVA STATION OF JND DIVISION TO HSR DIVN.

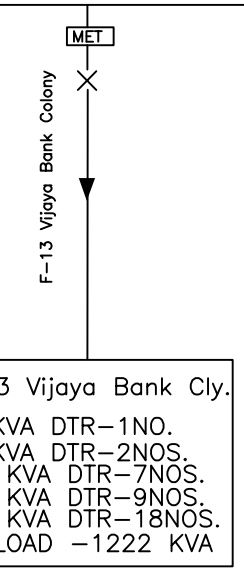

POWER FINANCE CORPORATION. NEW DELHI.

CENTRAL ELECTRICITY REGULATORY COMMISSION. NEW DELHI.

मेकॉन लिमिटेड

MECON LIMITED

NOTE: –

THIS DRAWING PREPARED BASED ON FIRST HAND INFORMATION RECEIVED FROM BESCOM FOR SELECTED CIRCLE AND OUR FIELD VISIT.

REV. NO.	DATE	ZONE	DESCRIPTION	BY	VERIFIED

REVISIONS

REFERENCES | DRG. NO.

THIS DRAWING IS THE PROPERTY OF MECON AND IS ISSUED FOR THE SPECIFIC PROJECT MENTIONED THEREIN. THIS IS NOT TO BE COPIED OR USED FOR OTHER PROJECTS UNLESS EXPRESSLY PERMITTED BY MECON.

SECTION	ELECTRICAL
LOCATION	KOLKATA
DESIGNED	J DASGUPTA
DRAWN	A SENGUPTA
CHECKED AND VERIFIED	RAMESH IYER
APPROVED	PRADIP ROY

ASSESMENT OF COMPONENT WISE AT&C LOSS FOR KARNATAKA.

SUB-STATION SINLE LINE DIAGRAM WITH 11KV FEEDER DETAILS FOR HSR DIVISION UNDER B'LORE SOUTH CIRCLE.

SCALE – N.T.S.

DRG.NO.MEC/19.56/Q707/BSC/ID/004

SHEET 9 OF 10

REV. 0

CONCURRED BY

REV./SEC.

DRG.NO.MEC/19.56/Q707/BSC/ID/004

HSR DIVISION

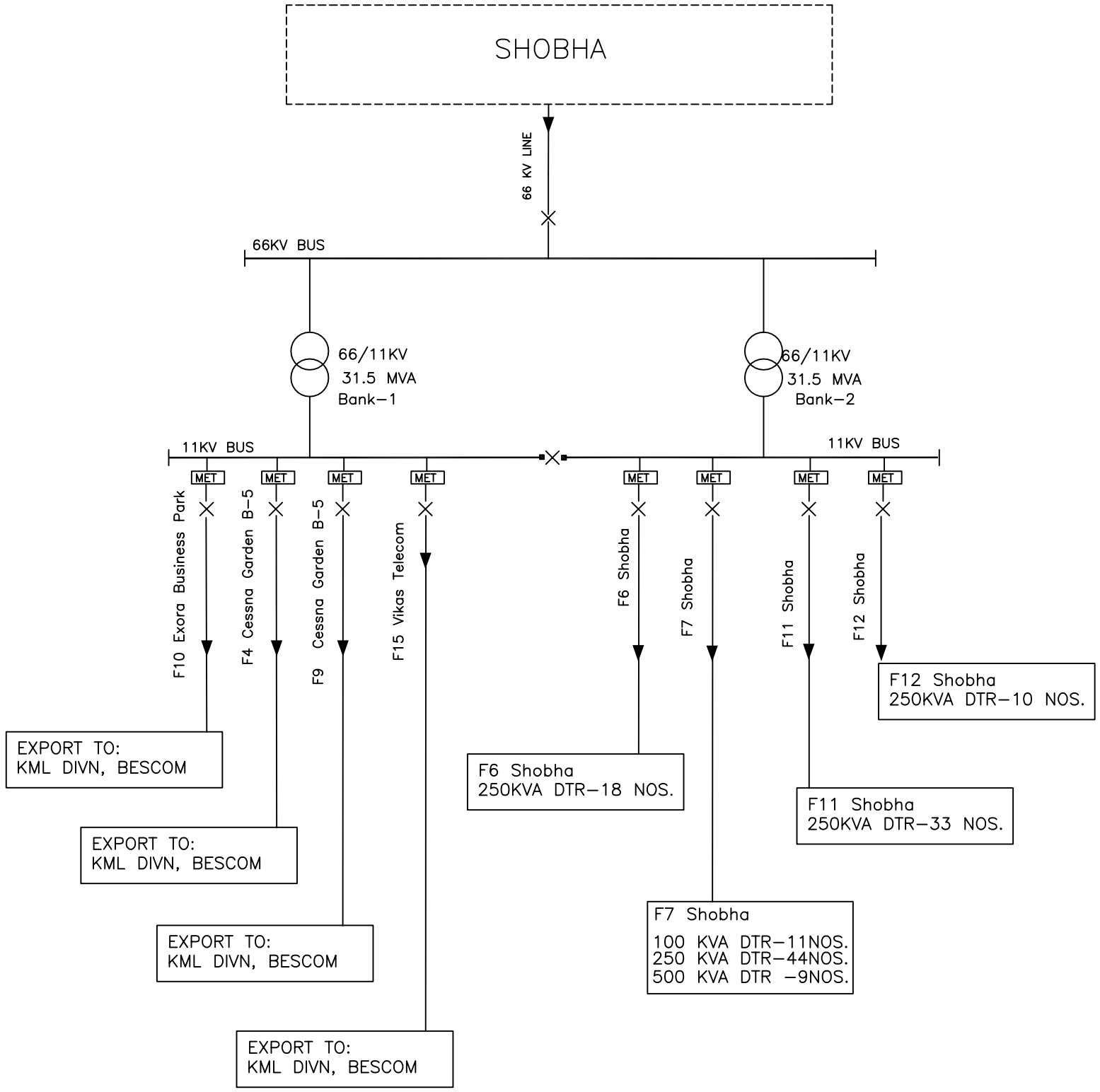

IMPORT POINT AT 11KV FROM S. PURA STATION OF JND DIVISION TO HSR DIVN.

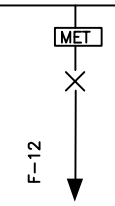

Note: For Load details pertaining to export points, refer drg. for concerned division.

POWER FINANCE CORPORATION. NEW DELHI.

CENTRAL ELECTRICITY REGULATORY COMMISSION. NEW DELHI.

मेकॉन लिमिटेड

MECON LIMITED

NOTE: –

THIS DRAWING PREPARED BASED ON FIRST HAND INFORMATION RECEIVED FROM BESCOM FOR SELECTED CIRCLE AND OUR FIELD VISIT.

REV. NO.	DATE	ZONE	DESCRIPTION	BY	VERIFIED

REVISIONS

CONCURRED BY

REV./SEC.

REFERENCES | DRG. NO.

THIS DRAWING IS THE PROPERTY OF MECON AND IS ISSUED FOR THE SPECIFIC PROJECT MENTIONED THEREIN. THIS IS NOT TO BE COPIED OR USED FOR OTHER PROJECTS UNLESS EXPRESSLY PERMITTED BY MECON.

SECTION	ELECTRICAL
LOCATION	KOLKATA
DESIGNED	J DASGUPTA
DRAWN	A SENGUPTA
CHECKED AND VERIFIED	RAMESH IYER
APPROVED	PRADIP ROY

ASSESMENT OF COMPONENT WISE AT&C LOSS FOR KARNATAKA.

SUB-STATION SINLE LINE DIAGRAM WITH 11KV FEEDER DETAILS FOR HSR DIVISION UNDER B'LORE SOUTH CIRCLE.

SCALE – N.T.S.

DRG.NO.MEC/19.56/Q707/BSC/ID/004

SHEET 10 OF 10

REV. 0

DRAWINGS AND DIAGRAMS
OF
HUBLI CIRCLE

DRAWING DESCRIPTION : 110KV & 33KV POWER INTERCONNECTION DIAGRAM AND 33KV HT CONSUMER DETAILS OF HUBLI CIRCLE.

DRAWING NO. : MEC/19.56/Q707/HBL/ID/001

NO. OF SHEETS : 01

DRG.NO.MEC/19.56/Q707/HBL/ID/001

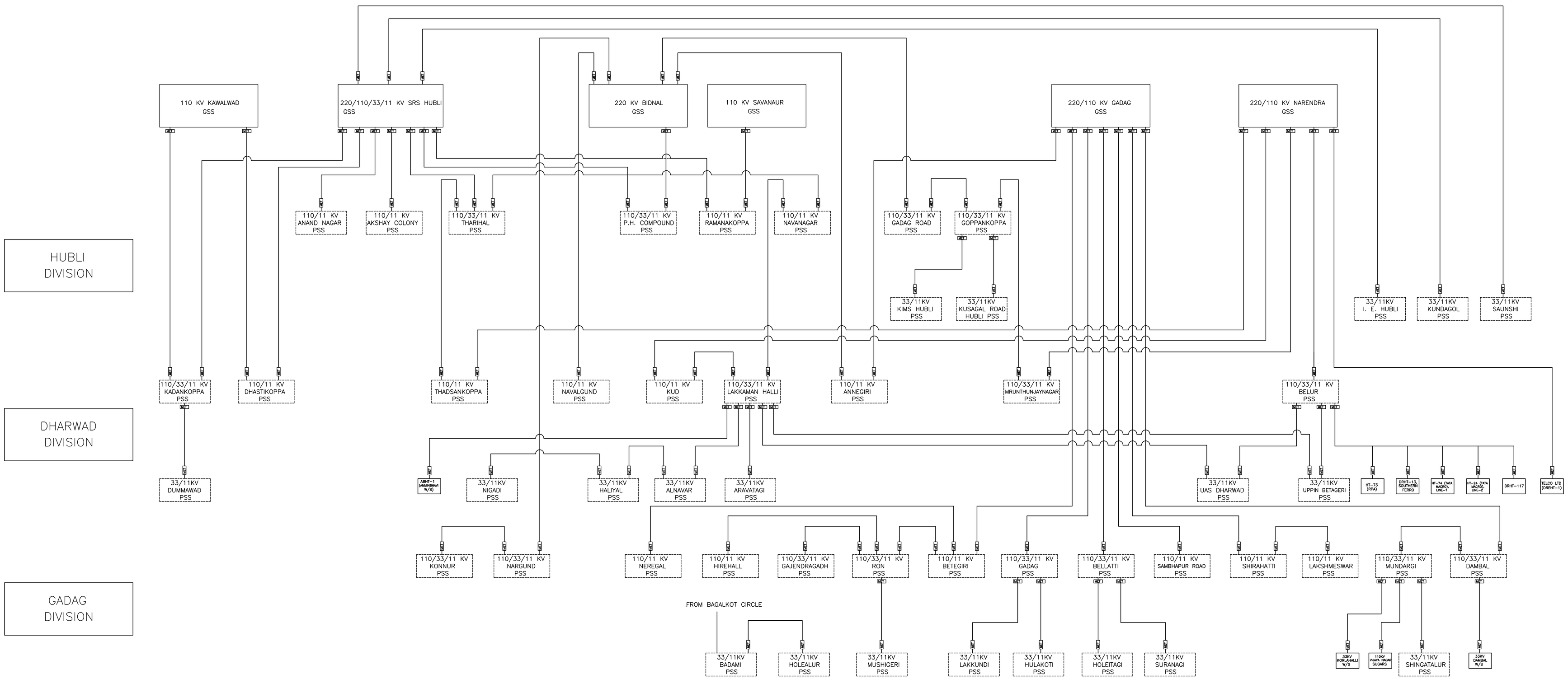

POWER FINANCE CORPORATION. NEW DELHI.

CENTRAL ELECTRICITY REGULATORY COMMISSION. NEW DELHI.

मेकॉन लिमिटेड

MECON LIMITED

NOTE: –

THIS DRAWING PREPARED BASED ON FIRST HAND INFORMATION RECEIVED FROM HESCOM FOR SELECTED CIRCLE AND OUR FIELD VISIT.

REV. NO.	DATE	ZONE	DESCRIPTION	BY	VERIFIED

REVISIONS

REFERENCES | DRG. NO.

THIS DRAWING IS THE PROPERTY OF MECON AND IS ISSUED FOR THE SPECIFIC PROJECT MENTIONED THEREIN. THIS IS NOT TO BE COPIED OR USED FOR OTHER PROJECTS UNLESS EXPRESSLY PERMITTED BY MECON.

SECTION	ELECTRICAL
LOCATION	KOLKATA
DESIGNED	M.K.JAISWARA
DRAWN	M.K.JAISWARA
CHECKED AND VERIFIED	ROBIN DAS
APPROVED	PRADIP ROY

ASSESMENT OF COMPONENT WISE AT&C LOSS FOR KARNATAKA STATE

110KV & 33KV POWER INTERCONNECTION DIAGRAM AND 33KV HT CONSUMER OF HUBLI CIRCLE.

SCALE – N.T.S.

DRG.NO.MEC/19.56/Q707/HBL/ID/001

SHEET 1 OF 1 | REV. 1

REV./SEC. | CONCURRED BY

DRAWING DESCRIPTION : SUB-STATION SLD WITH 11KV FEEDER DETAILS FOR HUBLI DIVISION UNDER HUBLI CIRCLE.

DRAWING NO. : MEC/19.56/Q707/HBL/ID/002

NO. OF SHEETS : 06

DRG.NO.MEC/19.56/Q707/HBL/ID/002

HUBLI DIVISION

220/11KV BIDNAL

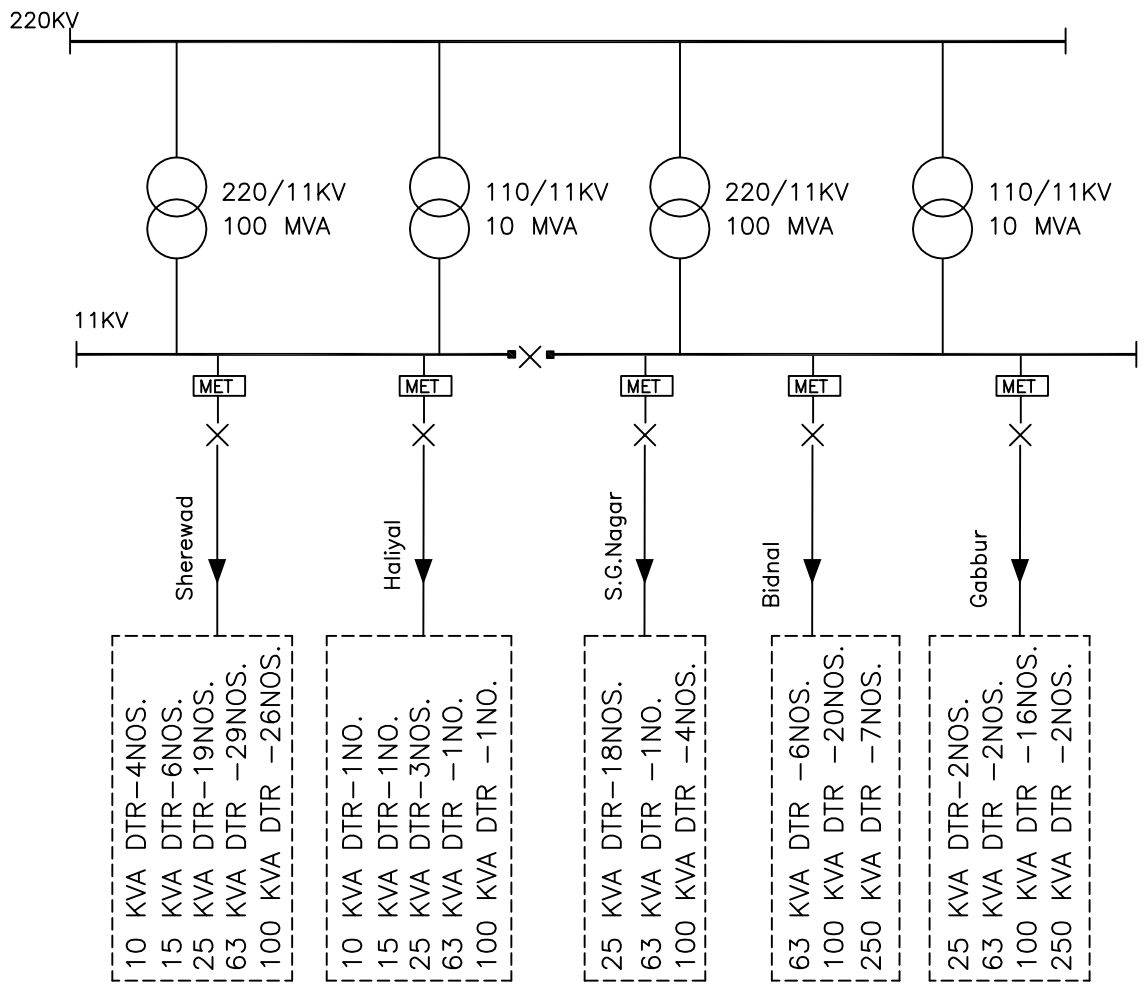

220/110/33/11KV SRS HUBLI

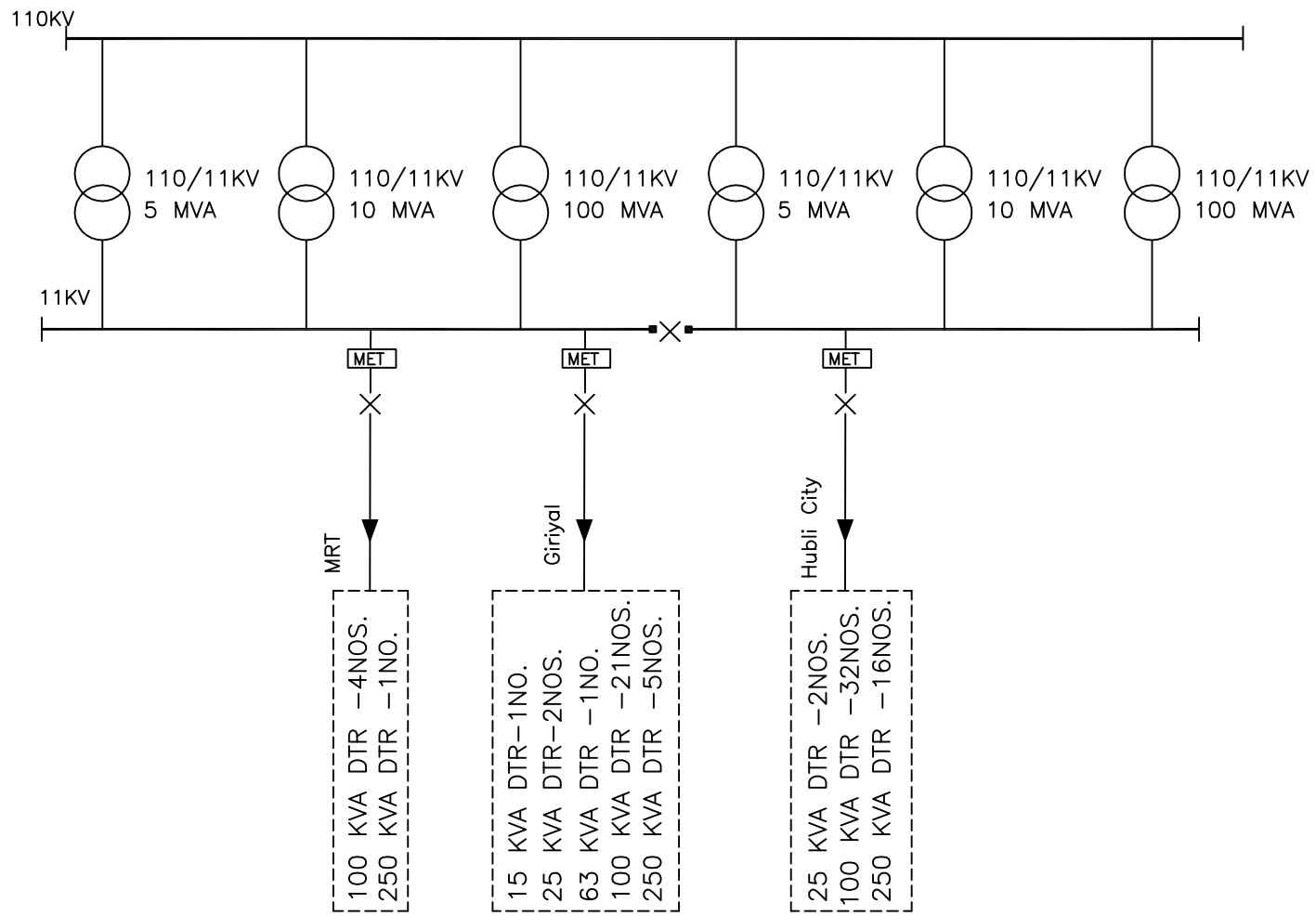

POWER FINANCE CORPORATION. NEW DELHI.

CENTRAL ELECTRICITY REGULATORY COMMISSION. NEW DELHI.

मेकॉन लिमिटेड

MECON LIMITED

NOTE: –

THIS DRAWING PREPARED BASED ON FIRST HAND INFORMATION RECEIVED FROM HESCOM FOR SELECTED CIRCLE AND OUR FIELD VISIT.

REV. NO.	DATE	ZONE	DESCRIPTION	BY	VERIFIED

REVISIONS

REFERENCES | DRG. NO.

THIS DRAWING IS THE PROPERTY OF MECON AND IS ISSUED FOR THE SPECIFIC PROJECT MENTIONED THEREIN. THIS IS NOT TO BE COPIED OR USED FOR OTHER PROJECTS UNLESS EXPRESSLY PERMITTED BY MECON.

SECTION	ELECTRICAL
LOCATION	KOLKATA
DESIGNED	M.K.JAISWARA
DRAWN	M.K.JAISWARA
CHECKED AND VERIFIED	ROBIN DAS
APPROVED	PRADIP ROY

ASSESMENT OF COMPONENT WISE AT&C LOSS FOR KARNATAKA STATE..

SUB–STATION SINLE LINE DIAGRAM WITH 11KV FEEDER DETAILS FOR HUBLI DIVISION UNDER HUBLI CIRCLE.

SCALE – N.T.S.

DRG.NO.MEC/19.56/Q707/HBL/ID/002

SHEET 1 OF 6 | REV. 0

REV./SEC. | CONCURRED BY

DRG.NO.MEC/19.56/Q707/HBL/ID/002

HUBLI DIVISION

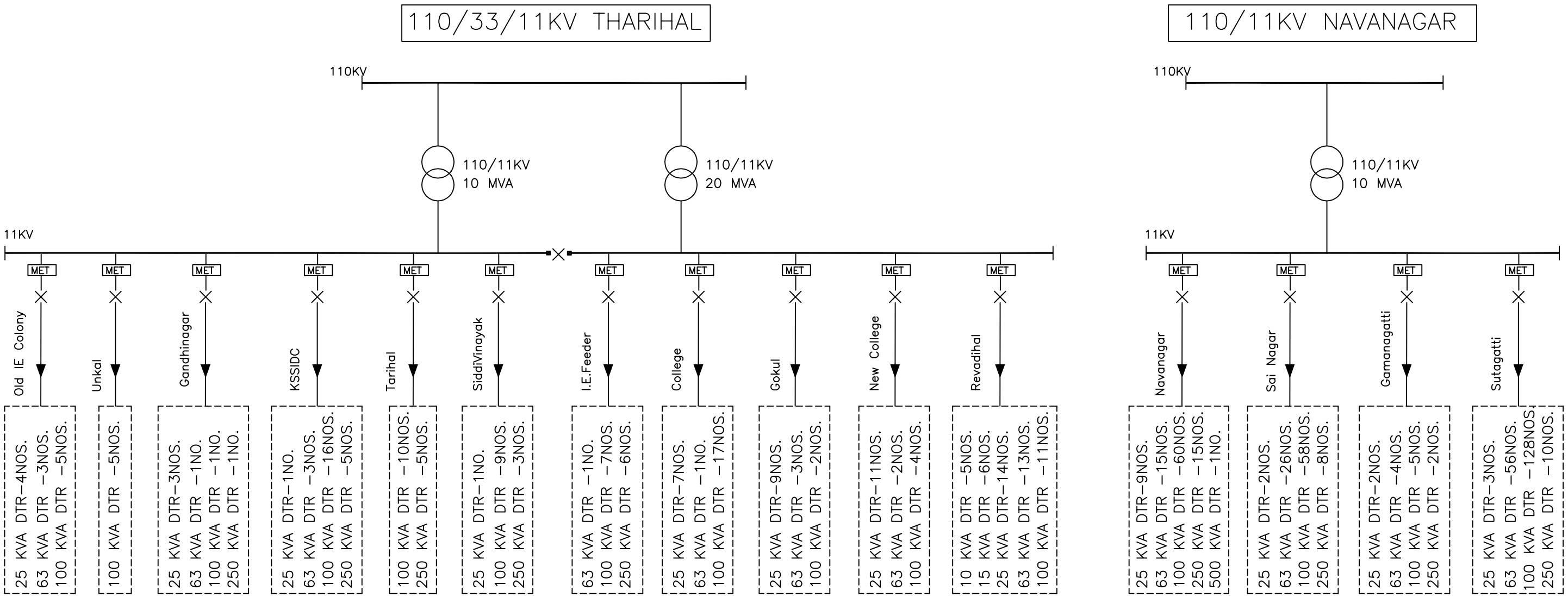

POWER FINANCE CORPORATION. NEW DELHI.

CENTRAL ELECTRICITY REGULATORY COMMISSION. NEW DELHI.

मेकॉन लिमिटेड

MECON LIMITED

NOTE: –

THIS DRAWING PREPARED BASED ON FIRST HAND INFORMATION RECEIVED FROM HESCOM FOR SELECTED CIRCLE AND OUR FIELD VISIT.

REV. / SEC.	CONCURRED BY
△	
△	
△	
△	
△	
△	

REV. NO.	DATE	ZONE	DESCRIPTION	BY	VERIFIED
△					
△					
△					
△					
△					
△					

REVISIONS

REFERENCES	DRG. NO.

THIS DRAWING IS THE PROPERTY OF MECON AND IS ISSUED FOR THE SPECIFIC PROJECT MENTIONED THEREIN. THIS IS NOT TO BE COPIED OR USED FOR OTHER PROJECTS UNLESS EXPRESSLY PERMITTED BY MECON.

SECTION	ELECTRICAL
LOCATION	KOLKATA
DESIGNED	M.K.JAISWARA
DRAWN	M.K.JAISWARA
CHECKED AND VERIFIED	ROBIN DAS
APPROVED	PRADIP ROY

ASSESMENT OF COMPONENT WISE AT&C LOSS FOR KARNATAKA STATE..

SUB–STATION SINLE LINE DIAGRAM WITH 11KV FEEDER DETAILS FOR HUBLI DIVISION UNDER HUBLI CIRCLE.

SCALE – N.T.S.

SHEET	REV.
2 OF 6	0

DRG.NO.MEC/19.56/Q707/HBL/ID/002

DRG.NO.MEC/19.56/Q707/HBL/ID/002

HUBLI DIVISION

110/11KV ANAND NAGAR

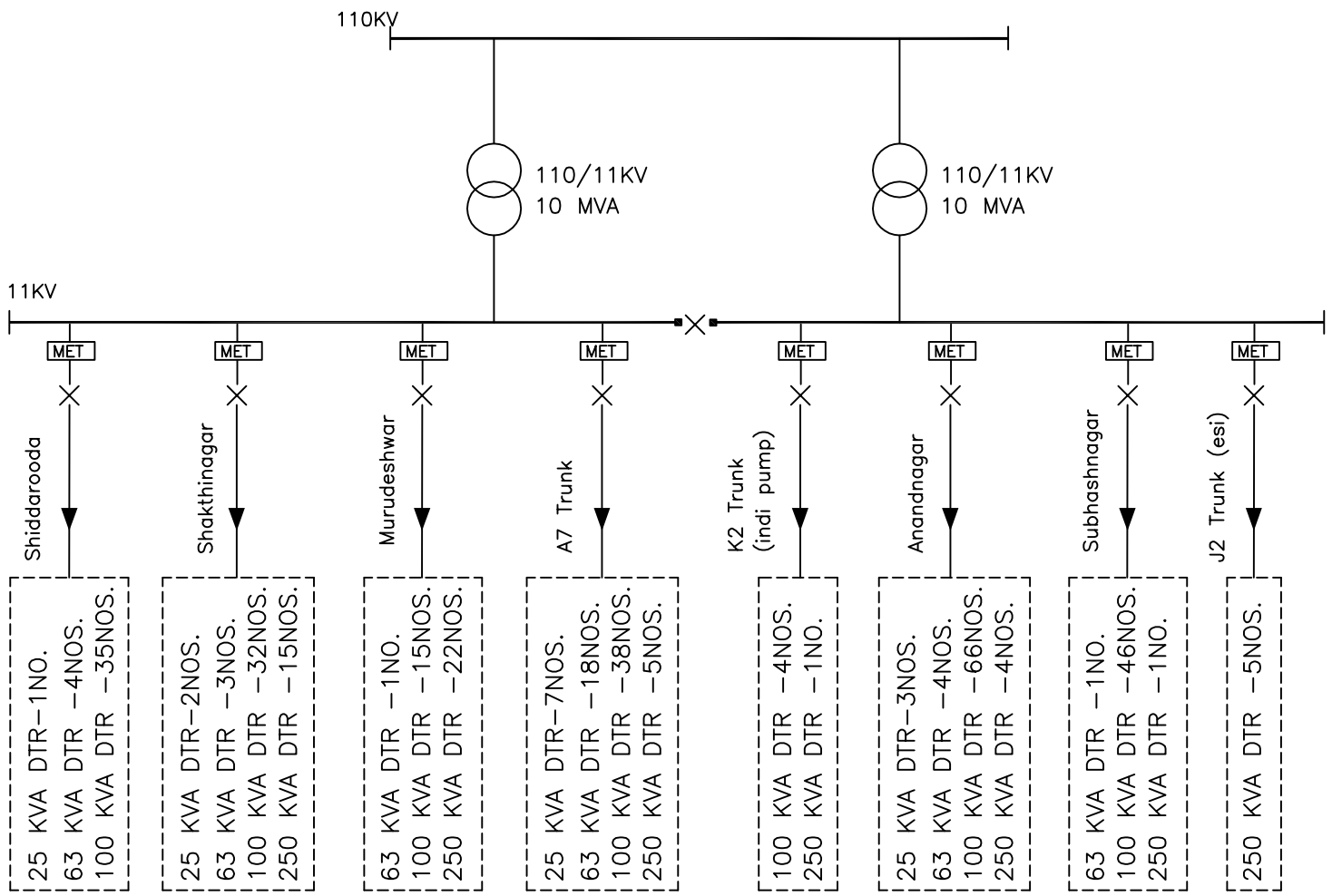

110/33/11KV GOPANKOPPA

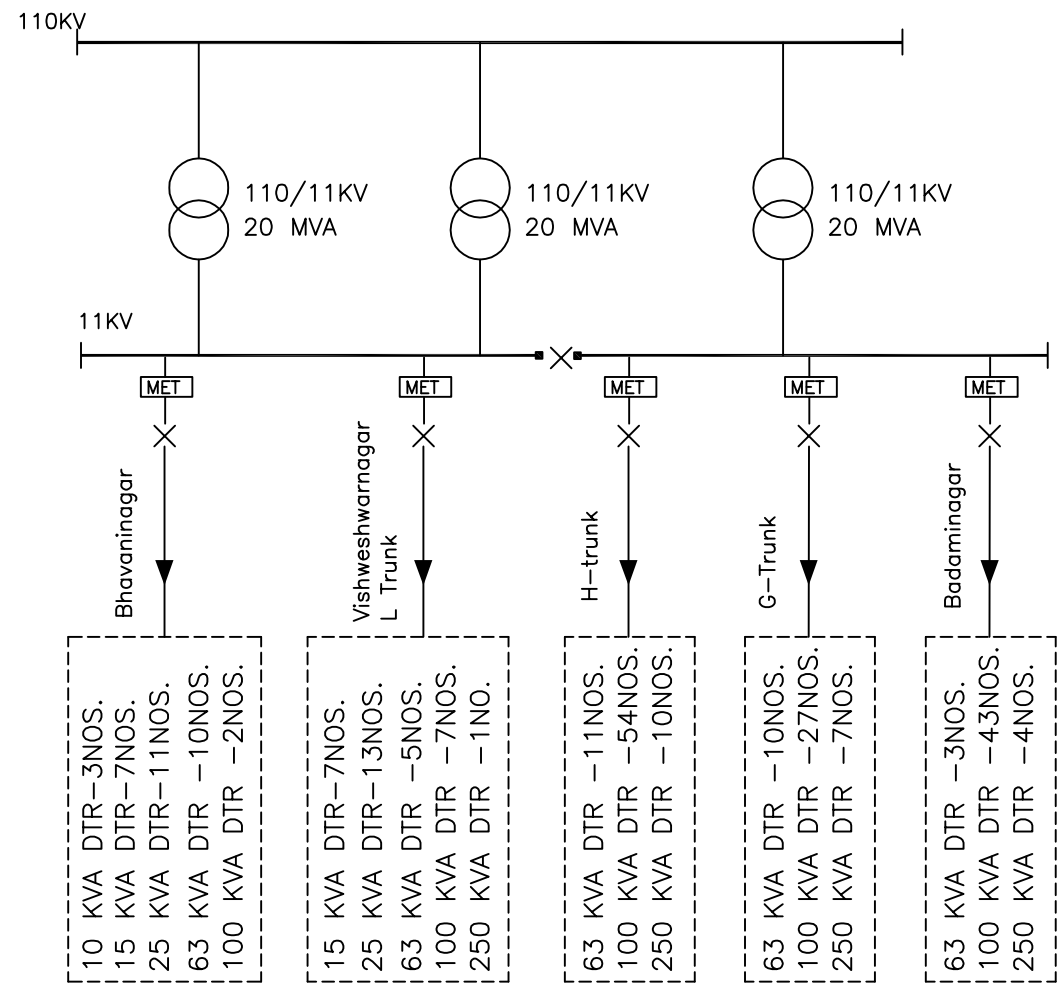

POWER FINANCE CORPORATION. NEW DELHI.

CENTRAL ELECTRICITY REGULATORY COMMISSION. NEW DELHI.

मेकॉन लिमिटेड

MECON LIMITED

NOTE: –

THIS DRAWING PREPARED BASED ON FIRST HAND INFORMATION RECEIVED FROM HESCOM FOR SELECTED CIRCLE AND OUR FIELD VISIT.

REV. NO.	DATE	ZONE	DESCRIPTION	BY	VERIFIED

REVISIONS

REFERENCES	DRG. NO.

THIS DRAWING IS THE PROPERTY OF MECON AND IS ISSUED FOR THE SPECIFIC PROJECT MENTIONED THEREIN. THIS IS NOT TO BE COPIED OR USED FOR OTHER PROJECTS UNLESS EXPRESSLY PERMITTED BY MECON.

SECTION	ELECTRICAL
LOCATION	KOLKATA
DESIGNED	M.K.JAISWARA
DRAWN	M.K.JAISWARA
CHECKED AND VERIFIED	ROBIN DAS
APPROVED	PRADIP ROY

ASSESMENT OF COMPONENT WISE AT&C LOSS FOR KARNATAKA STATE..

SUB–STATION SINLE LINE DIAGRAM WITH 11KV FEEDER DETAILS FOR HUBLI DIVISION UNDER HUBLI CIRCLE.

SCALE – N.T.S.

DRG.NO.MEC/19.56/Q707/HBL/ID/002

SHEET 3 OF 6

REV. 0

CONCURRED BY

REV./SEC.

DRG.NO.MEC/19.56/Q707/HBL/ID/002

HUBLI DIVISION

110/11KV GADAG ROAD

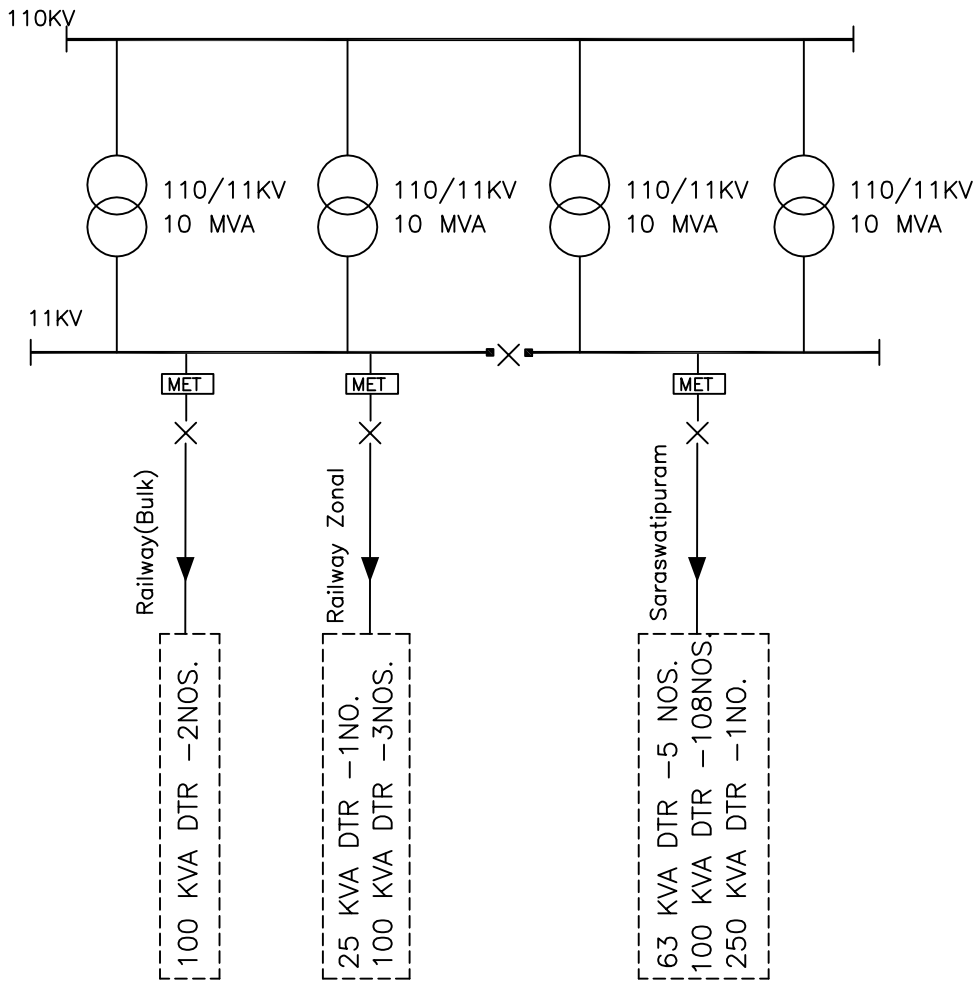

110/33/11KV P.H.COMPOUND

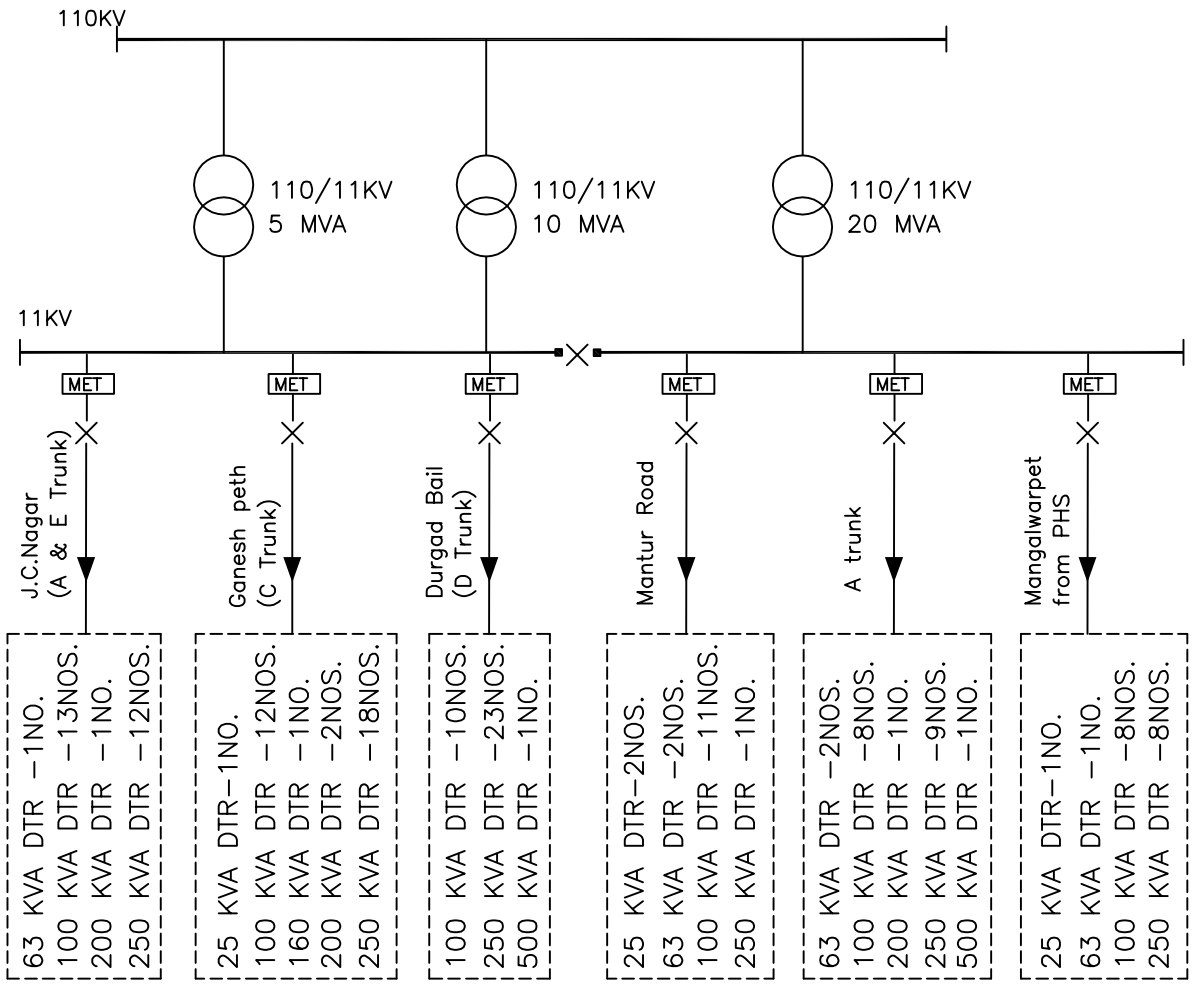

POWER FINANCE CORPORATION. NEW DELHI.

CENTRAL ELECTRICITY REGULATORY COMMISSION. NEW DELHI.

मेकॉन लिमिटेड

MECON LIMITED

NOTE: –

THIS DRAWING PREPARED BASED ON FIRST HAND INFORMATION RECEIVED FROM HESCOM FOR SELECTED CIRCLE AND OUR FIELD VISIT.

REV. NO.	DATE	ZONE	DESCRIPTION	BY	VERIFIED

REVISIONS

REFERENCES | DRG. NO.

THIS DRAWING IS THE PROPERTY OF MECON AND IS ISSUED FOR THE SPECIFIC PROJECT MENTIONED THEREIN. THIS IS NOT TO BE COPIED OR USED FOR OTHER PROJECTS UNLESS EXPRESSLY PERMITTED BY MECON.

SECTION	ELECTRICAL
LOCATION	KOLKATA
DESIGNED	M.K.JAISWARA
DRAWN	M.K.JAISWARA
CHECKED AND VERIFIED	ROBIN DAS
APPROVED	PRADIP ROY

ASSESMENT OF COMPONENT WISE AT&C LOSS FOR KARNATAKA STATE..

SUB–STATION SINLE LINE DIAGRAM WITH 11KV FEEDER DETAILS FOR HUBLI DIVISION UNDER HUBLI CIRCLE.

SCALE – N.T.S.

DRG.NO.MEC/19.56/Q707/HBL/ID/002

SHEET 4 OF 6

REV. 0

REV./SEC. CONCURRED BY

DRG.NO.MEC/19.56/Q707/HBL/ID/002

HUBLI DIVISION

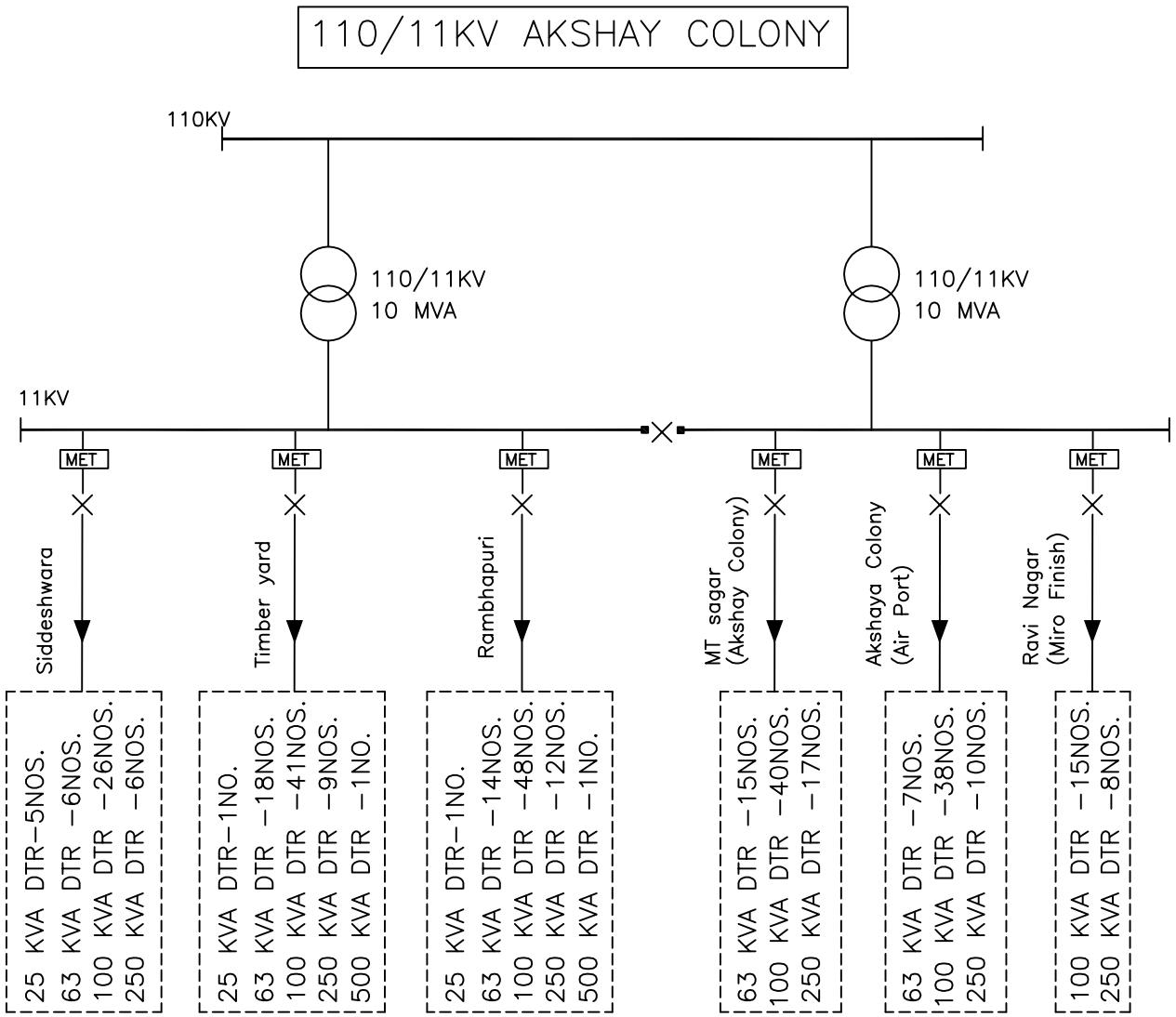

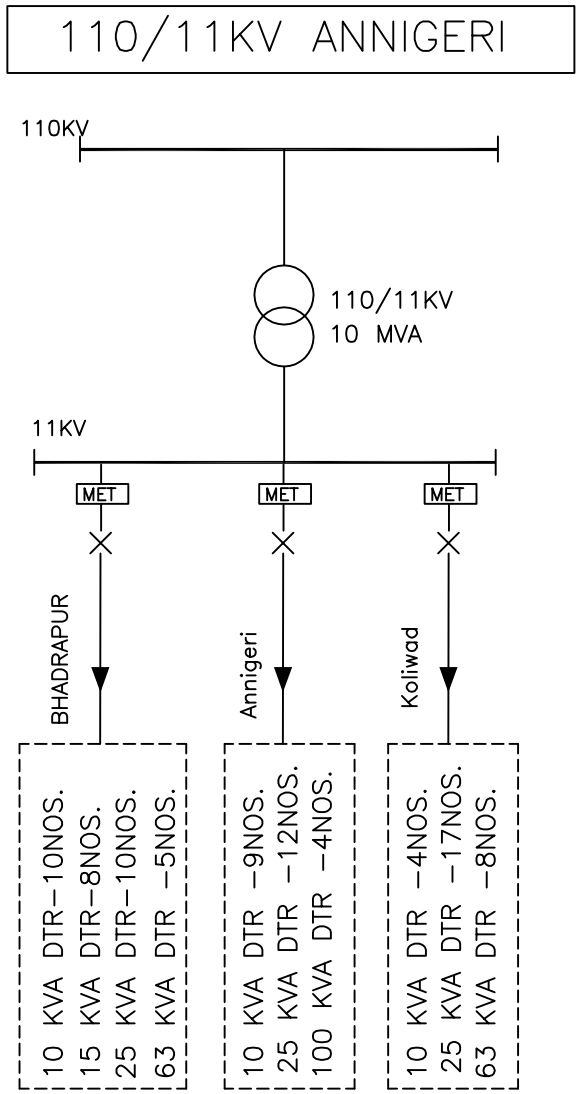

POWER FINANCE CORPORATION. NEW DELHI.

CENTRAL ELECTRICITY REGULATORY COMMISSION. NEW DELHI.

मेकॉन लिमिटेड

MECON LIMITED

NOTE: –

THIS DRAWING PREPARED BASED ON FIRST HAND INFORMATION RECEIVED FROM HESCOM FOR SELECTED CIRCLE AND OUR FIELD VISIT.

REV. NO.	DATE	ZONE	DESCRIPTION	BY	VERIFIED
			REVISIONS		

REFERENCES | DRG. NO.

THIS DRAWING IS THE PROPERTY OF MECON AND IS ISSUED FOR THE SPECIFIC PROJECT MENTIONED THEREIN. THIS IS NOT TO BE COPIED OR USED FOR OTHER PROJECTS UNLESS EXPRESSLY PERMITTED BY MECON.

SECTION	ELECTRICAL
LOCATION	KOLKATA
DESIGNED	M.K.JAISWARA
DRAWN	M.K.JAISWARA
CHECKED AND VERIFIED	ROBIN DAS
APPROVED	PRADIP ROY

ASSESMENT OF COMPONENT WISE AT&C LOSS FOR KARNATAKA STATE..

SUB–STATION SINLE LINE DIAGRAM WITH 11KV FEEDER DETAILS FOR HUBLI DIVISION UNDER HUBLI CIRCLE.

SCALE – N.T.S.

DRG.NO.MEC/19.56/Q707/HBL/ID/002

SHEET 5 OF 6 | REV. 0

REV./SEC. | CONCURRED BY

DRG.NO.MEC/19.56/Q707/HBL/ID/002

HUBLI DIVISION

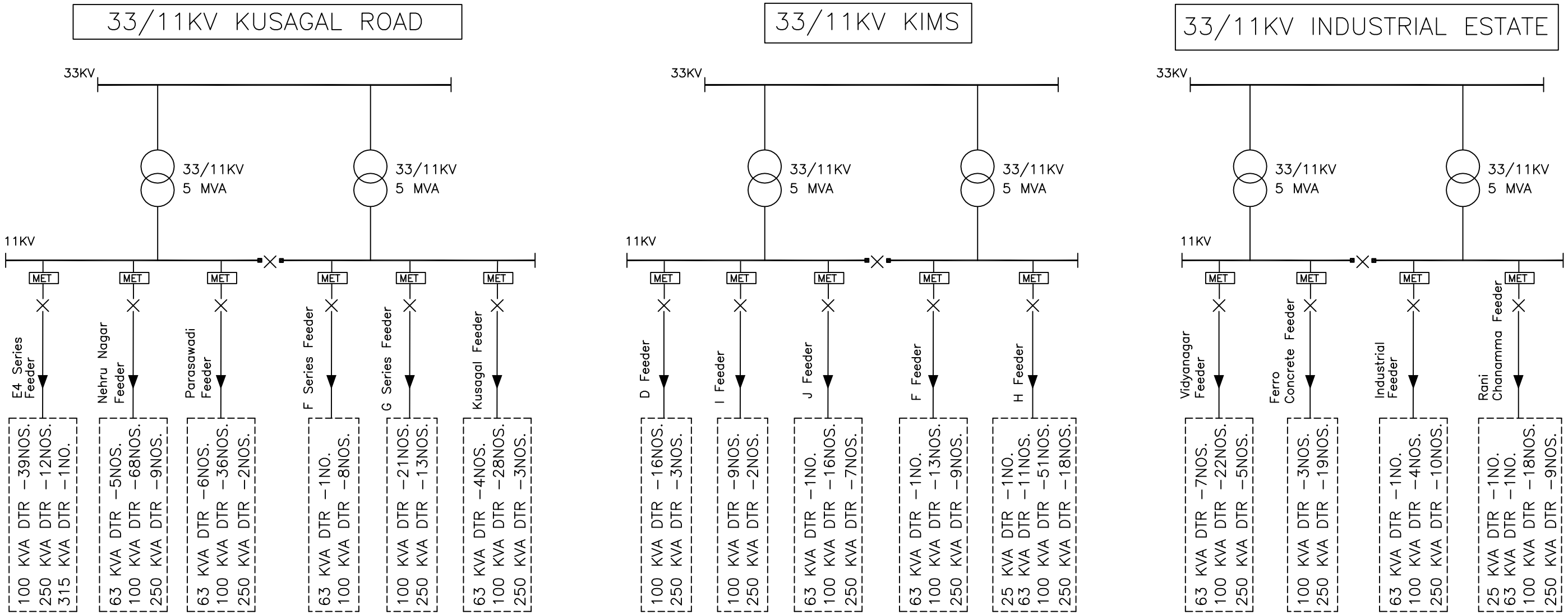

POWER FINANCE CORPORATION. NEW DELHI.

CENTRAL ELECTRICITY REGULATORY COMMISSION. NEW DELHI.

मेकॉन लिमिटेड

MECON LIMITED

ISO 9001 COMPANY

NOTE: –

THIS DRAWING PREPARED BASED ON FIRST HAND INFORMATION RECEIVED FROM HESCOM FOR SELECTED CIRCLE AND OUR FIELD VISIT.

REV. NO.	DATE	ZONE	DESCRIPTION	BY	VERIFIED

REVISIONS

REFERENCES	DRG. NO.

THIS DRAWING IS THE PROPERTY OF MECON AND IS ISSUED FOR THE SPECIFIC PROJECT MENTIONED THEREIN. THIS IS NOT TO BE COPIED OR USED FOR OTHER PROJECTS UNLESS EXPRESSLY PERMITTED BY MECON.

SECTION	ELECTRICAL
LOCATION	KOLKATA
DESIGNED	M.K.JAISWARA
DRAWN	M.K.JAISWARA
CHECKED AND VERIFIED	ROBIN DAS
APPROVED	PRADIP ROY

ASSESMENT OF COMPONENT WISE AT&C LOSS FOR KARNATAKA STATE..

SUB-STATION SINLE LINE DIAGRAM WITH 11KV FEEDER DETAILS FOR HUBLI DIVISION UNDER HUBLI CIRCLE.

SCALE – N.T.S.

DRG.NO.MEC/19.56/Q707/HBL/ID/002

SHEET 6 OF 6

REV. 0

REV./SEC. CONCURRED BY

DRAWING DESCRIPTION : SUB-STATION SLD WITH 11KV FEEDER DETAILS FOR DHARWAD DIVISION UNDER HUBLI CIRCLE.

DRAWING NO. : MEC/19.56/Q707/HBL/ID/003

NO. OF SHEETS : 06

DRG.NO.MEC/19.56/Q707/HBL/ID/003

DHARWAD DIVISION

110/33/11KV MRITHYUNJAY NAGAR

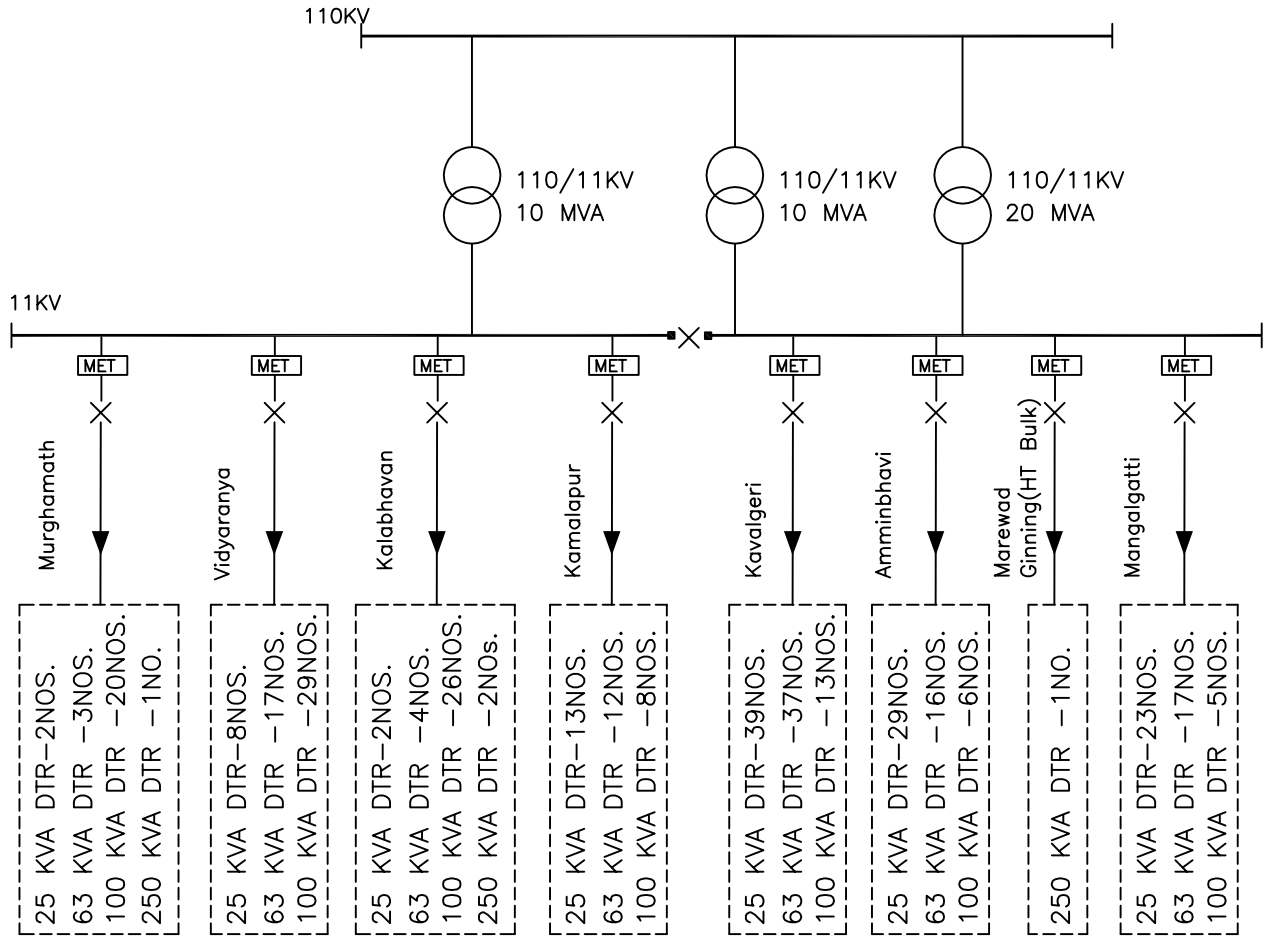

110/11KV KUD

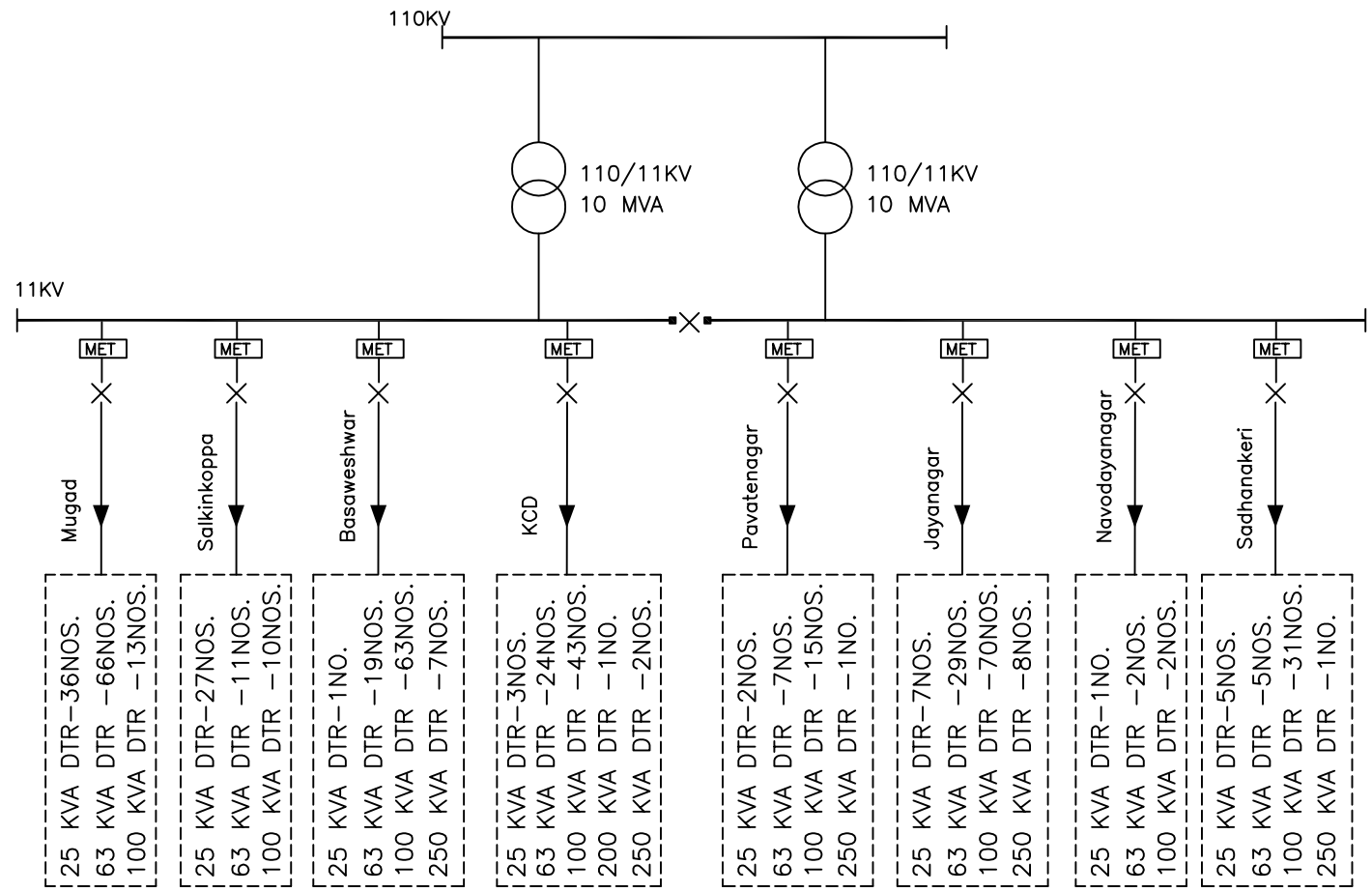

POWER FINANCE CORPORATION. NEW DELHI.

CENTRAL ELECTRICITY REGULATORY COMMISSION. NEW DELHI.

मेकॉन लिमिटेड

MECON LIMITED

NOTE: –

THIS DRAWING PREPARED BASED ON FIRST HAND INFORMATION RECEIVED FROM HESCOM FOR SELECTED CIRCLE AND OUR FIELD VISIT.

REV. NO.	DATE	ZONE	DESCRIPTION	BY	VERIFIED

REVISIONS

REFERENCES | DRG. NO.

THIS DRAWING IS THE PROPERTY OF MECON AND IS ISSUED FOR THE SPECIFIC PROJECT MENTIONED THEREIN. THIS IS NOT TO BE COPIED OR USED FOR OTHER PROJECTS UNLESS EXPRESSLY PERMITTED BY MECON.

SECTION	ELECTRICAL
LOCATION	KOLKATA
DESIGNED	M.K.JAISWARA
DRAWN	M.K.JAISWARA
CHECKED AND VERIFIED	ROBIN DAS
APPROVED	PRADIP ROY

ASSESMENT OF COMPONENT WISE AT&C LOSS FOR KARNATAKA STATE..

SUB-STATION SINLE LINE DIAGRAM WITH 11KV FEEDER DETAILS FOR DHARWAD DIVISION UNDER HUBLI CIRCLE.

SCALE – N.T.S.

DRG.NO.MEC/19.56/Q707/HBL/ID/003

SHEET 1 OF 6

REV. 0

REV./SEC. CONCURRED BY

DRG.NO.MEC/19.56/Q707/HBL/ID/003

DHARWAD DIVISION

110/33/11KV LAKAMANAHALLI

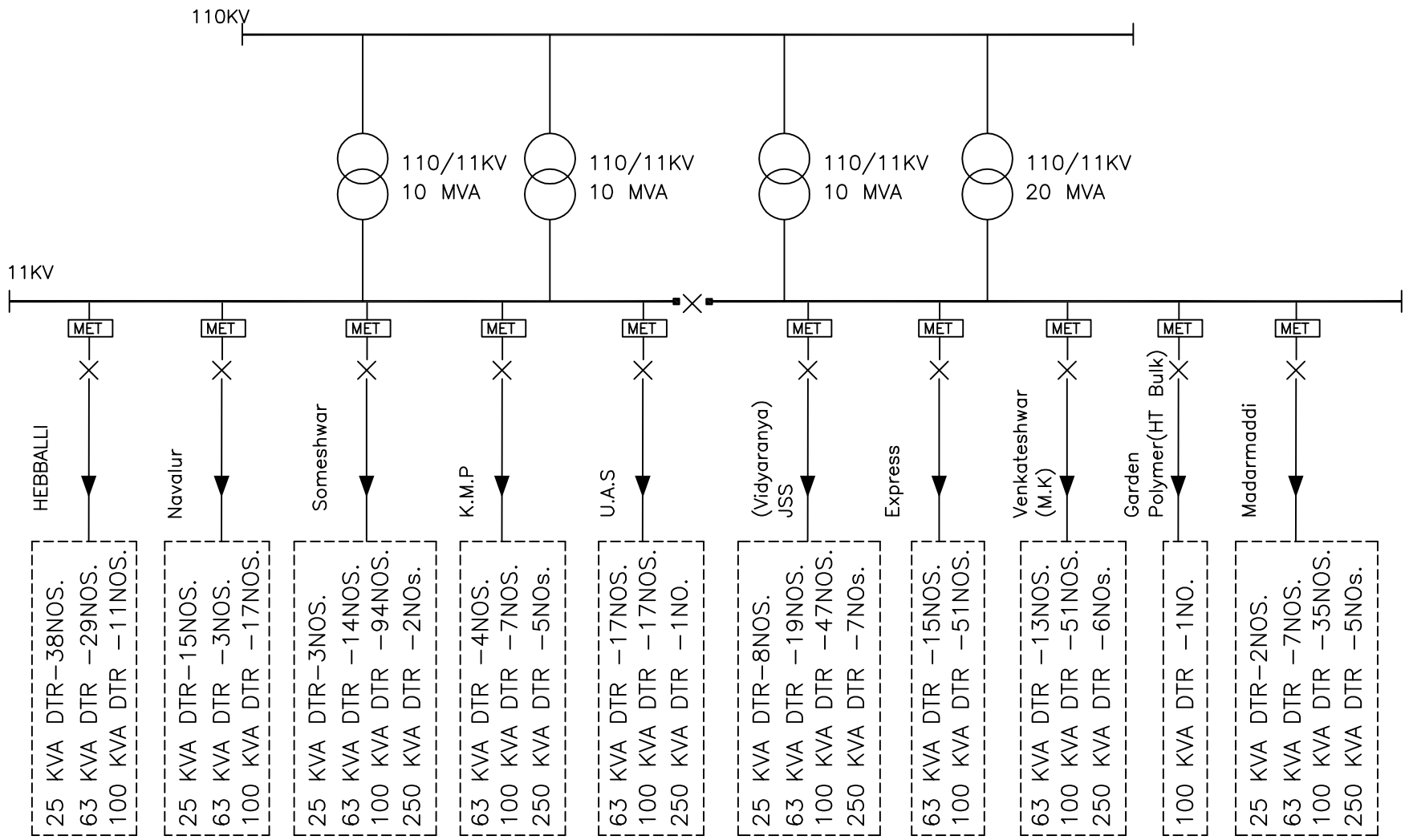

110/11KV TADASINAKOPPA

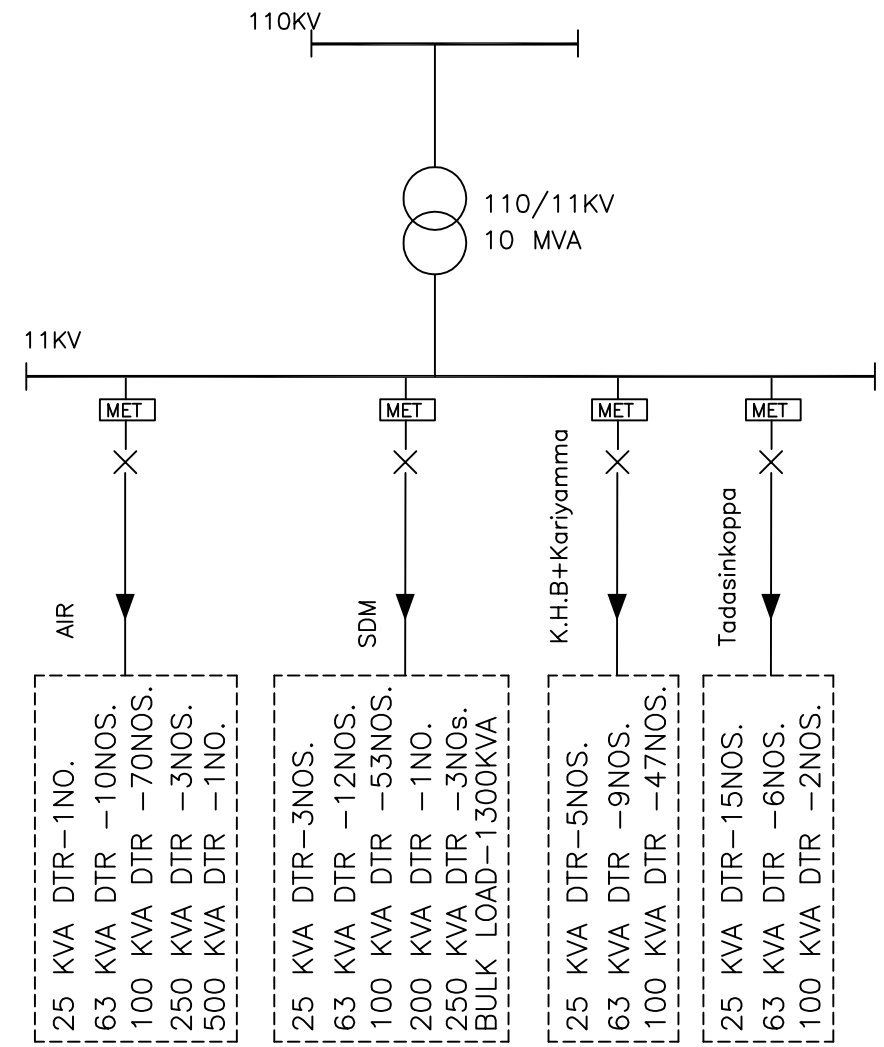

POWER FINANCE CORPORATION. NEW DELHI.

CENTRAL ELECTRICITY REGULATORY COMMISSION. NEW DELHI.

मेकॉन लिमिटेड

MECON LIMITED

ISO 9001 COMPANY

NOTE: –

THIS DRAWING PREPARED BASED ON FIRST HAND INFORMATION RECEIVED FROM HESCOM FOR SELECTED CIRCLE AND OUR FIELD VISIT.

REV. NO.	DATE	ZONE	DESCRIPTION	BY	VERIFIED

REVISIONS

REV./SEC. — CONCURRED BY

REFERENCES — DRG. NO.

THIS DRAWING IS THE PROPERTY OF MECON AND IS ISSUED FOR THE SPECIFIC PROJECT MENTIONED THEREIN. THIS IS NOT TO BE COPIED OR USED FOR OTHER PROJECTS UNLESS EXPRESSLY PERMITTED BY MECON.

SECTION	ELECTRICAL
LOCATION	KOLKATA
DESIGNED	M.K.JAISWARA
DRAWN	M.K.JAISWARA
CHECKED AND VERIFIED	ROBIN DAS
APPROVED	PRADIP ROY

ASSESMENT OF COMPONENT WISE AT&C LOSS FOR KARNATAKA STATE..

SUB–STATION SINLE LINE DIAGRAM WITH 11KV FEEDER DETAILS FOR DHARWAD DIVISION UNDER HUBLI CIRCLE.

SCALE – N.T.S.

DRG.NO.MEC/19.56/Q707/HBL/ID/003

SHEET 2 OF 6 — REV. 0

DRG.NO.MEC/19.56/Q707/HBL/ID/003

DHARWAD DIVISION

110/33/11KV BELUR

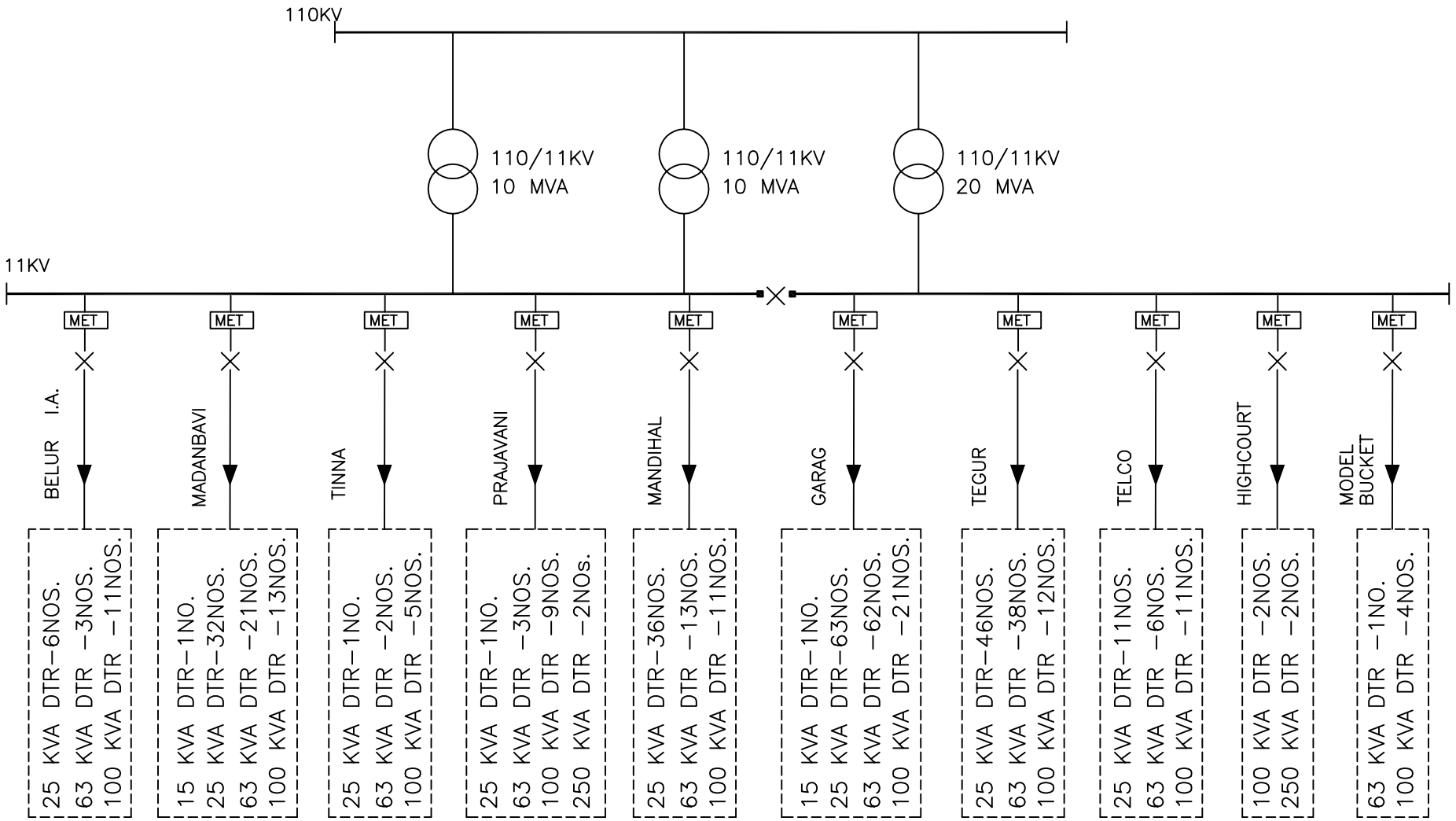

110/33/11KV KADANAKOPPA

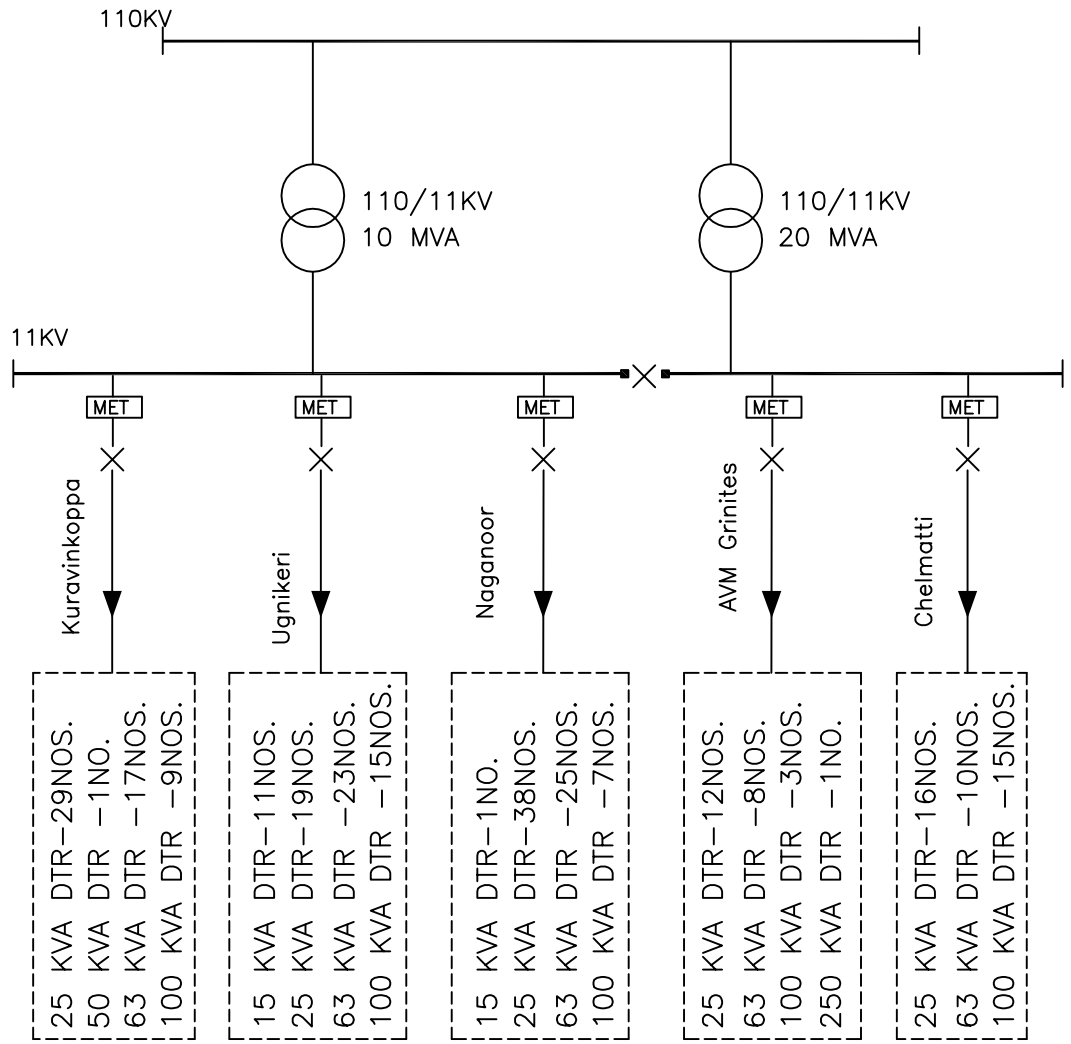

POWER FINANCE CORPORATION. NEW DELHI.

CENTRAL ELECTRICITY REGULATORY COMMISSION. NEW DELHI.

मेकॉन लिमिटेड

MECON LIMITED

ISO 9001 COMPANY

NOTE: –

THIS DRAWING PREPARED BASED ON FIRST HAND INFORMATION RECEIVED FROM HESCOM FOR SELECTED CIRCLE AND OUR FIELD VISIT.

REV. NO.	DATE	ZONE	DESCRIPTION	BY	VERIFIED

REVISIONS

REV./SEC. — CONCURRED BY

REFERENCES — DRG. NO.

THIS DRAWING IS THE PROPERTY OF MECON AND IS ISSUED FOR THE SPECIFIC PROJECT MENTIONED THEREIN. THIS IS NOT TO BE COPIED OR USED FOR OTHER PROJECTS UNLESS EXPRESSLY PERMITTED BY MECON.

SECTION	ELECTRICAL
LOCATION	KOLKATA
DESIGNED	M.K.JAISWARA
DRAWN	M.K.JAISWARA
CHECKED AND VERIFIED	ROBIN DAS
APPROVED	PRADIP ROY

ASSESMENT OF COMPONENT WISE AT&C LOSS FOR KARNATAKA STATE..

SUB-STATION SINLE LINE DIAGRAM WITH 11KV FEEDER DETAILS FOR DHARWAD DIVISION UNDER HUBLI CIRCLE.

SCALE – N.T.S.

SHEET 3 OF 6 — REV. 0

DRG.NO.MEC/19.56/Q707/HBL/ID/003

DRG.NO.MEC/19.56/Q707/HBL/ID/003

DHARWAD DIVISION

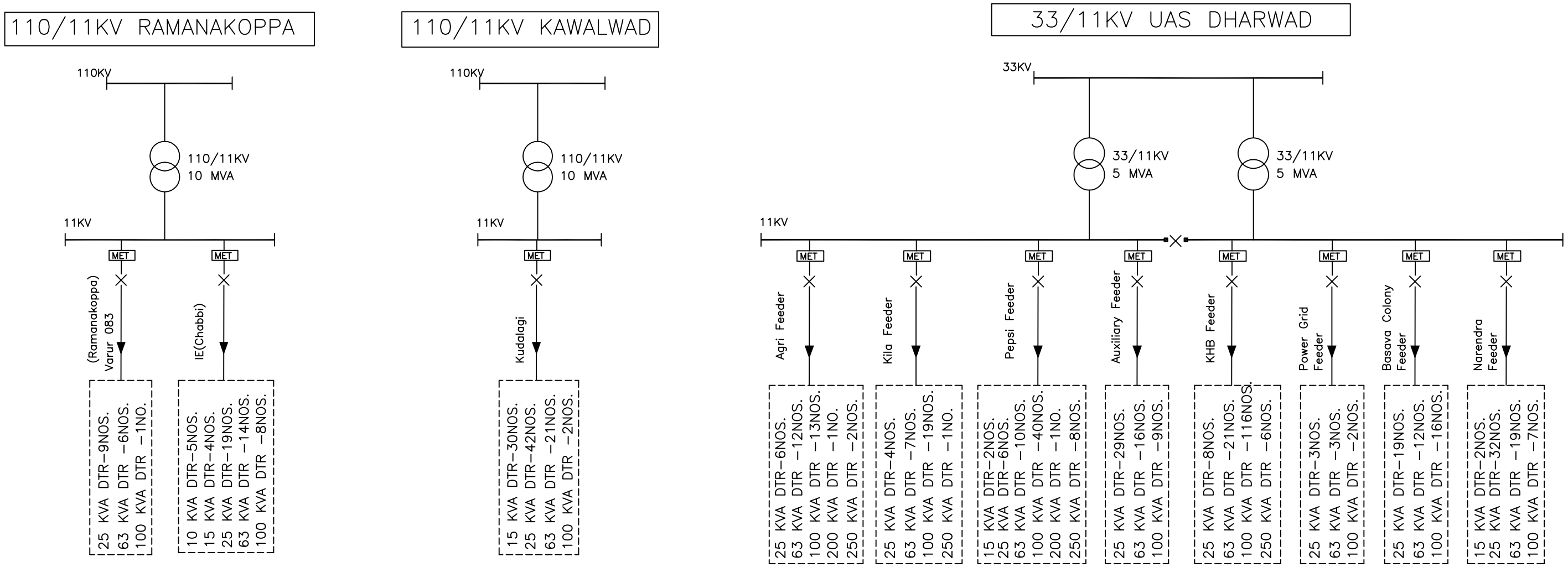

POWER FINANCE CORPORATION. NEW DELHI.

CENTRAL ELECTRICITY REGULATORY COMMISSION. NEW DELHI.

मेकॉन लिमिटेड

MECON LIMITED

NOTE: –

THIS DRAWING PREPARED BASED ON FIRST HAND INFORMATION RECEIVED FROM HESCOM FOR SELECTED CIRCLE AND OUR FIELD VISIT.

REV. NO.	DATE	ZONE	DESCRIPTION	BY	VERIFIED

REVISIONS

REFERENCES	DRG. NO.

THIS DRAWING IS THE PROPERTY OF MECON AND IS ISSUED FOR THE SPECIFIC PROJECT MENTIONED THEREIN. THIS IS NOT TO BE COPIED OR USED FOR OTHER PROJECTS UNLESS EXPRESSLY PERMITTED BY MECON.

SECTION	ELECTRICAL
LOCATION	KOLKATA
DESIGNED	M.K.JAISWARA
DRAWN	M.K.JAISWARA
CHECKED AND VERIFIED	ROBIN DAS
APPROVED	PRADIP ROY

ASSESMENT OF COMPONENT WISE AT&C LOSS FOR KARNATAKA STATE..

SUB-STATION SINLE LINE DIAGRAM WITH 11KV FEEDER DETAILS FOR DHARWAD DIVISION UNDER HUBLI CIRCLE.

SCALE – N.T.S.

DRG.NO.MEC/19.56/Q707/HBL/ID/003

SHEET 4 OF 6

REV. 0

CONCURRED BY

REV./SEC.

DRG.NO.MEC/19.56/Q707/HBL/ID/003

DHARWAD DIVISION

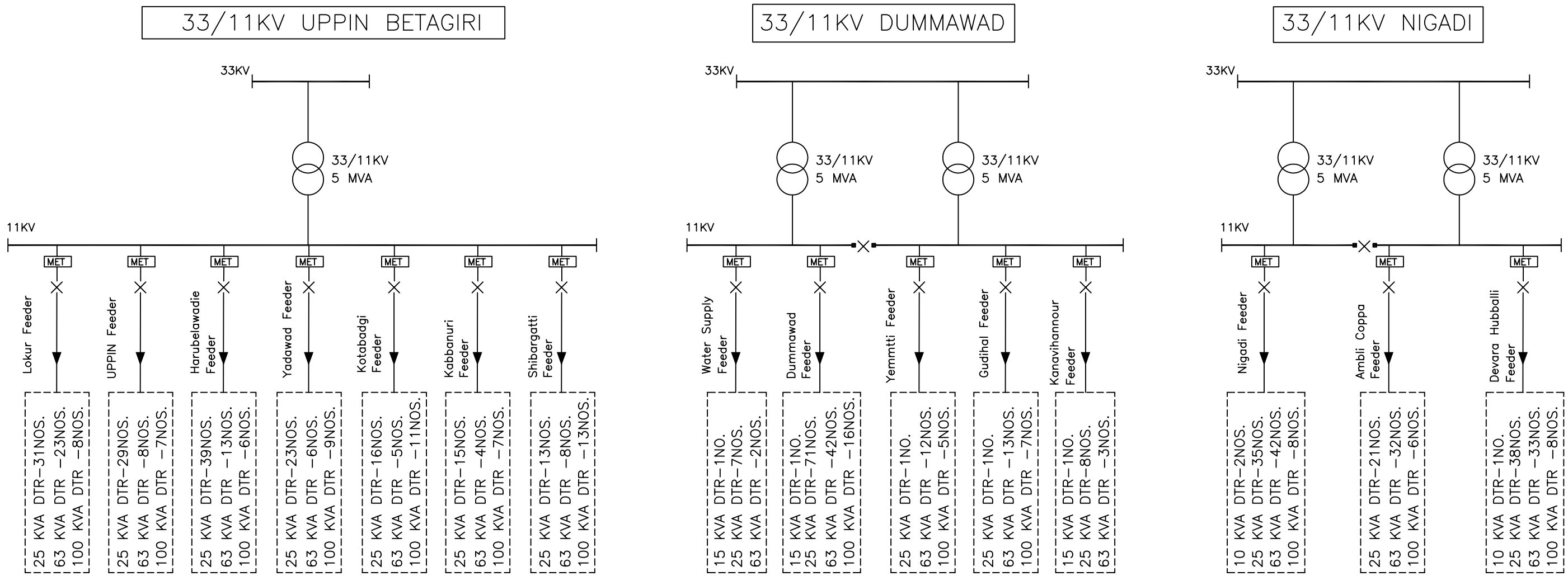

POWER FINANCE CORPORATION. NEW DELHI.

CENTRAL ELECTRICITY REGULATORY COMMISSION. NEW DELHI.

मेकॉन लिमिटेड

MECON LIMITED

NOTE: –

THIS DRAWING PREPARED BASED ON FIRST HAND INFORMATION RECEIVED FROM HESCOM FOR SELECTED CIRCLE AND OUR FIELD VISIT.

REV. NO.	DATE	ZONE	DESCRIPTION	BY	VERIFIED

REVISIONS

REFERENCES	DRG. NO.

THIS DRAWING IS THE PROPERTY OF MECON AND IS ISSUED FOR THE SPECIFIC PROJECT MENTIONED THEREIN. THIS IS NOT TO BE COPIED OR USED FOR OTHER PROJECTS UNLESS EXPRESSLY PERMITTED BY MECON.

SECTION	ELECTRICAL
LOCATION	KOLKATA
DESIGNED	M.K.JAISWARA
DRAWN	M.K.JAISWARA
CHECKED AND VERIFIED	ROBIN DAS
APPROVED	PRADIP ROY

ASSESMENT OF COMPONENT WISE AT&C LOSS FOR KARNATAKA STATE..

SUB-STATION SINLE LINE DIAGRAM WITH 11KV FEEDER DETAILS FOR DHARWAD DIVISION UNDER HUBLI CIRCLE.

SCALE – N.T.S.

DRG.NO.MEC/19.56/Q707/HBL/ID/003

SHEET 5 OF 6

REV. 0

REV./SEC. CONCURRED BY

DRG.NO.MEC/19.56/Q707/HBL/ID/003

DHARWAD DIVISION

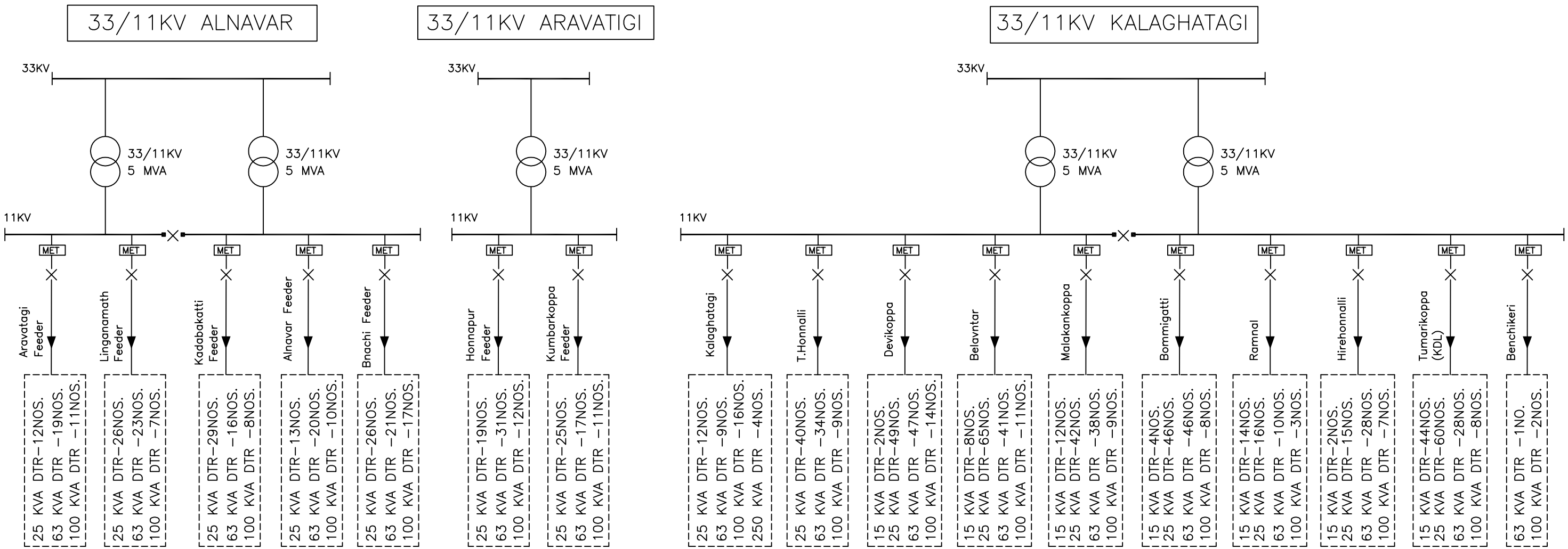

POWER FINANCE CORPORATION. NEW DELHI.

CENTRAL ELECTRICITY REGULATORY COMMISSION. NEW DELHI.

मेकॉन लिमिटेड

MECON LIMITED

NOTE: –

THIS DRAWING PREPARED BASED ON FIRST HAND INFORMATION RECEIVED FROM HESCOM FOR SELECTED CIRCLE AND OUR FIELD VISIT.

REV. NO.	DATE	ZONE	DESCRIPTION	BY	VERIFIED

REVISIONS

REFERENCES	DRG. NO.

THIS DRAWING IS THE PROPERTY OF MECON AND IS ISSUED FOR THE SPECIFIC PROJECT MENTIONED THEREIN. THIS IS NOT TO BE COPIED OR USED FOR OTHER PROJECTS UNLESS EXPRESSLY PERMITTED BY MECON.

SECTION	ELECTRICAL
LOCATION	KOLKATA
DESIGNED	M.K.JAISWARA
DRAWN	M.K.JAISWARA
CHECKED AND VERIFIED	ROBIN DAS
APPROVED	PRADIP ROY

ASSESMENT OF COMPONENT WISE AT&C LOSS FOR KARNATAKA STATE..

SUB-STATION SINLE LINE DIAGRAM WITH 11KV FEEDER DETAILS FOR DHARWAD DIVISION UNDER HUBLI CIRCLE.

SCALE – N.T.S.

DRG.NO.MEC/19.56/Q707/HBL/ID/003

SHEET 6 OF 6

REV. 0

REV./SEC. CONCURRED BY

DRAWING DESCRIPTION : SUB-STATION SLD WITH 11KV FEEDER DETAILS FOR GADAG DIVISION UNDER HUBLI CIRCLE.

DRAWING NO. : MEC/19.56/Q707/HBL/ID/004

NO. OF SHEETS : 08

GADAG DIVISION

110/33/11KV GAJENDRAGAD

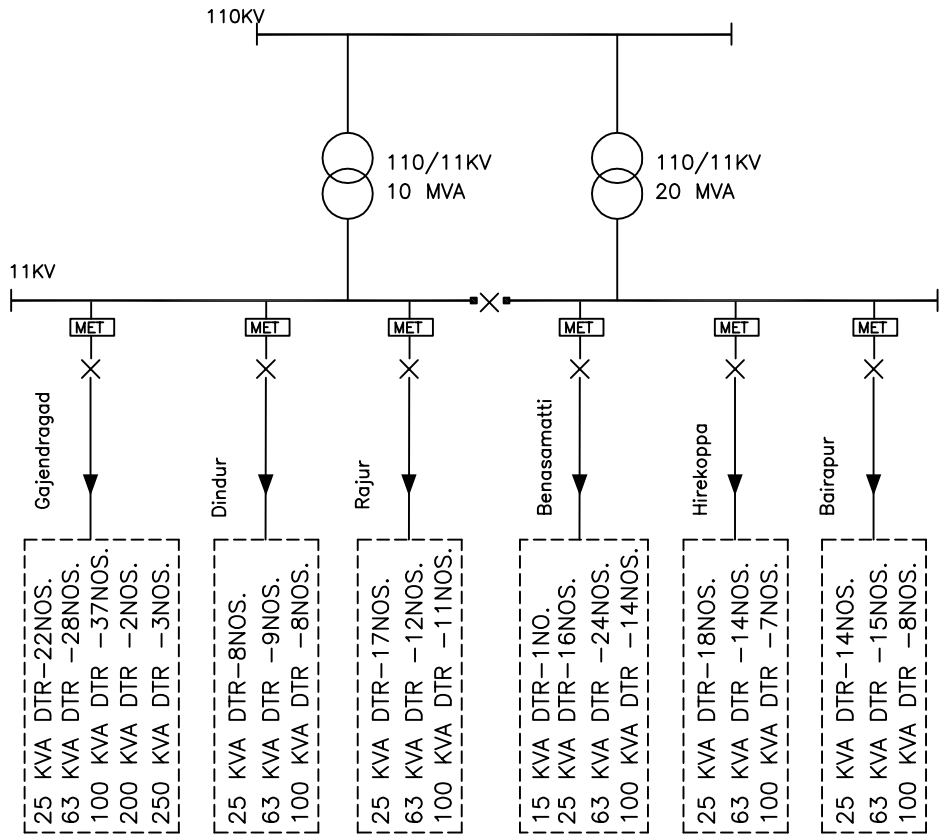

110/33/11KV NARGUND

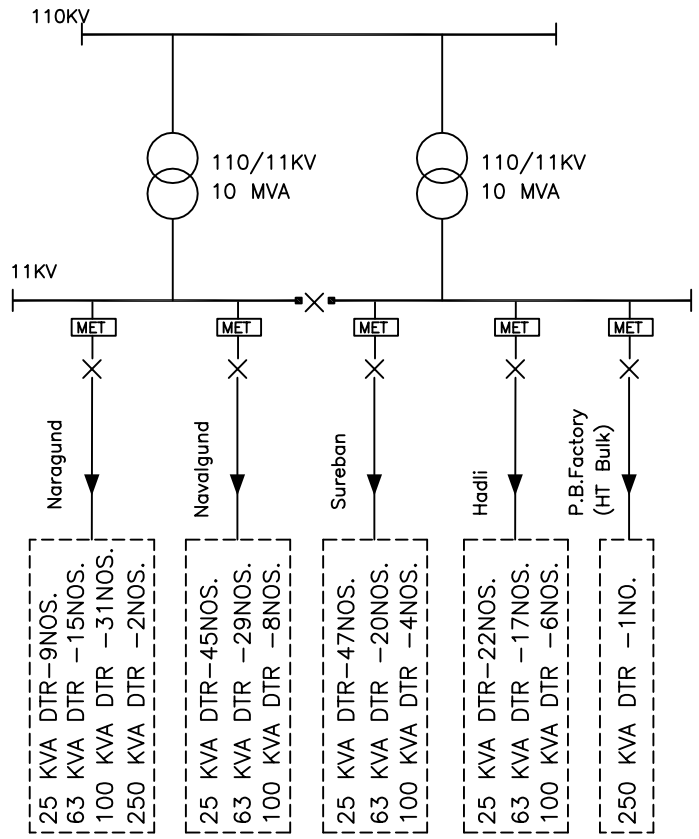

110/11KV NAREGAL

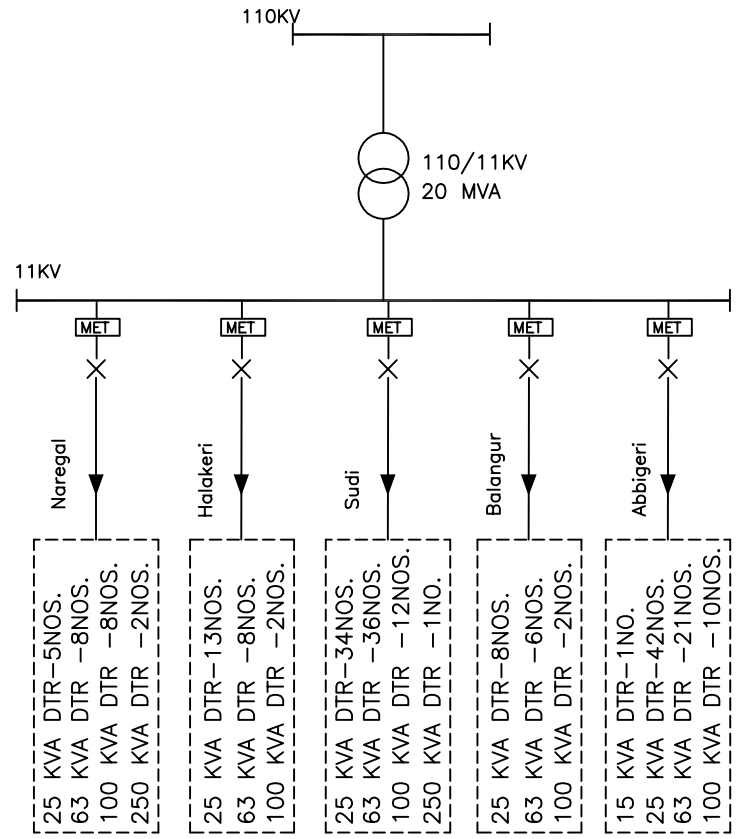

POWER FINANCE CORPORATION. NEW DELHI.

CENTRAL ELECTRICITY REGULATORY COMMISSION. NEW DELHI.

मेकॉन लिमिटेड

MECON LIMITED

NOTE: –

THIS DRAWING PREPARED BASED ON FIRST HAND INFORMATION RECEIVED FROM HESCOM FOR SELECTED CIRCLE AND OUR FIELD VISIT.

REV. NO.	DATE	ZONE	DESCRIPTION	BY	VERIFIED
			REVISIONS		

REFERENCES | DRG. NO.

THIS DRAWING IS THE PROPERTY OF MECON AND IS ISSUED FOR THE SPECIFIC PROJECT MENTIONED THEREIN. THIS IS NOT TO BE COPIED OR USED FOR OTHER PROJECTS UNLESS EXPRESSLY PERMITTED BY MECON.

SECTION	ELECTRICAL
LOCATION	KOLKATA
DESIGNED	M.K.JAISWARA
DRAWN	M.K.JAISWARA
CHECKED AND VERIFIED	ROBIN DAS
APPROVED	PRADIP ROY

ASSESMENT OF COMPONENT WISE AT&C LOSS FOR KARNATAKA STATE..

SUB-STATION SINLE LINE DIAGRAM WITH 11KV FEEDER DETAILS FOR GADAGD DIVISION UNDER HUBLI CIRCLE.

SCALE – N.T.S.

DRG.NO.MEC/19.56/Q707/HBL/ID/004

SHEET 1 OF 8 | REV. 0

CONCURRED BY

REV./SEC.

DRG.NO.MEC/19.56/Q707/HBL/ID/004

GADAG DIVISION

110/33/11KV RON

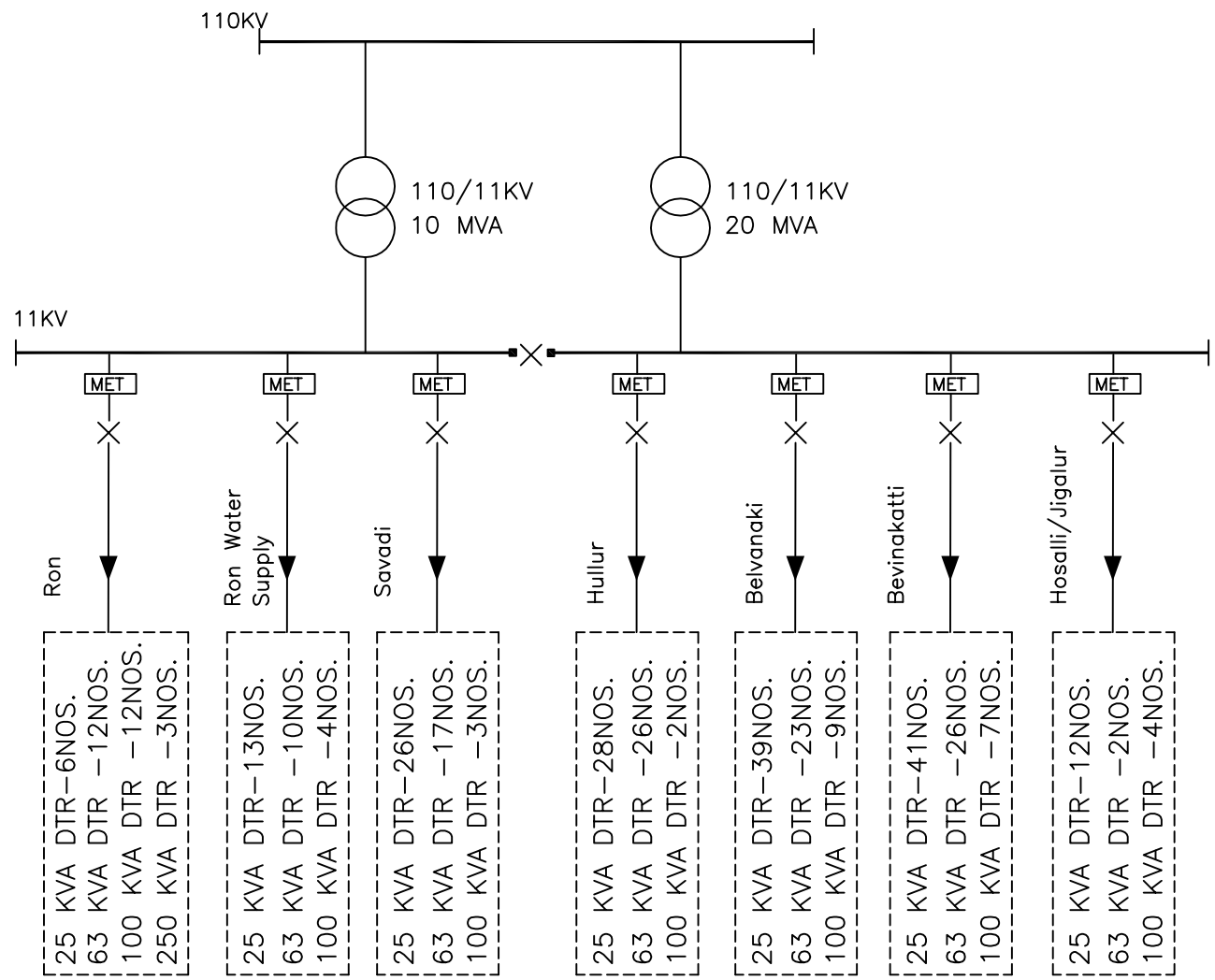

110/33/11KV BELLATTI

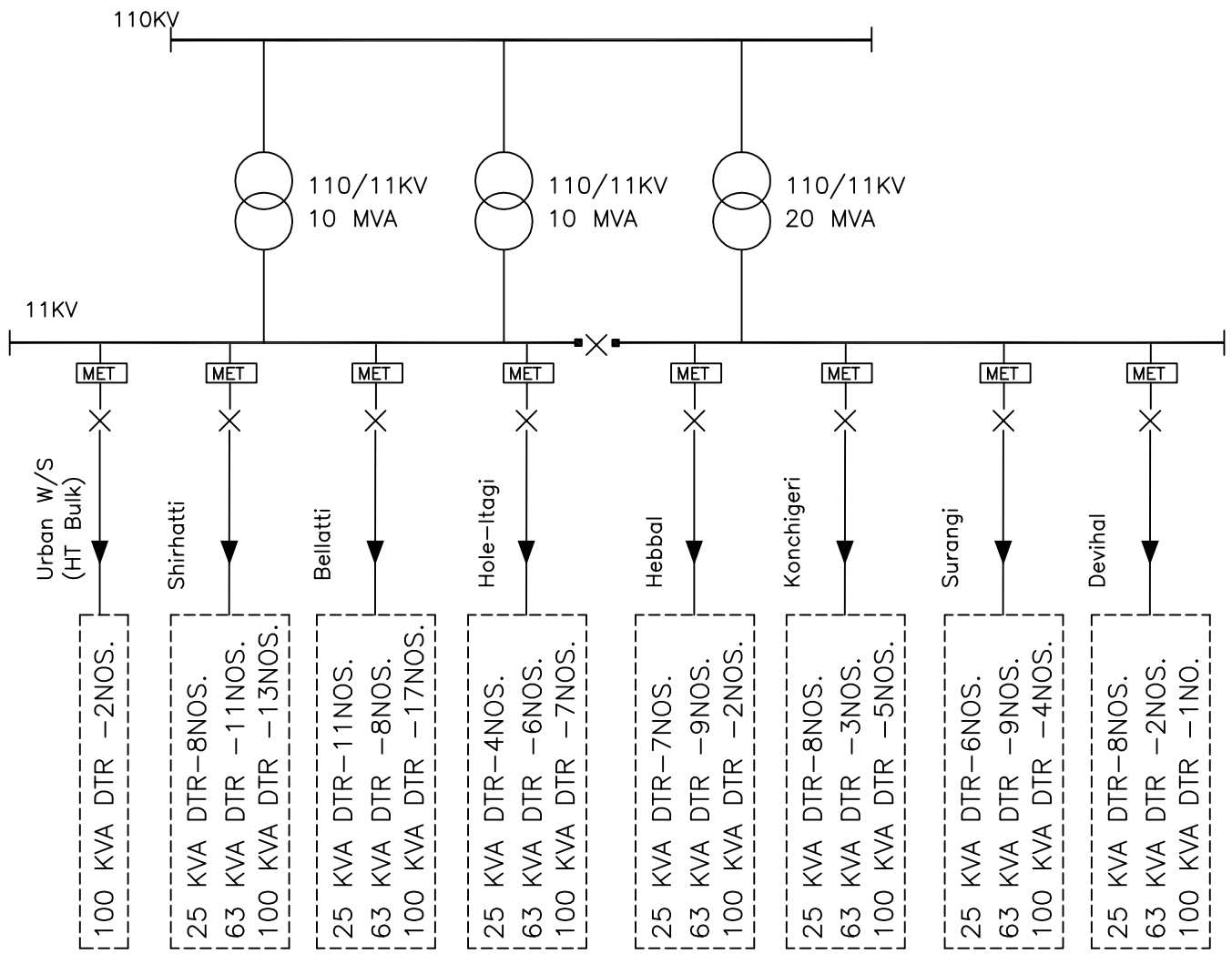

POWER FINANCE CORPORATION. NEW DELHI.

CENTRAL ELECTRICITY REGULATORY COMMISSION. NEW DELHI.

मेकॉन लिमिटेड

MECON LIMITED

NOTE: –

THIS DRAWING PREPARED BASED ON FIRST HAND INFORMATION RECEIVED FROM HESCOM FOR SELECTED CIRCLE AND OUR FIELD VISIT.

REV. NO.	DATE	ZONE	DESCRIPTION	BY	VERIFIED

REVISIONS

REFERENCES | DRG. NO.

THIS DRAWING IS THE PROPERTY OF MECON AND IS ISSUED FOR THE SPECIFIC PROJECT MENTIONED THEREIN. THIS IS NOT TO BE COPIED OR USED FOR OTHER PROJECTS UNLESS EXPRESSLY PERMITTED BY MECON.

SECTION	ELECTRICAL
LOCATION	KOLKATA
DESIGNED	M.K.JAISWARA
DRAWN	M.K.JAISWARA
CHECKED AND VERIFIED	ROBIN DAS
APPROVED	PRADIP ROY

ASSESMENT OF COMPONENT WISE AT&C LOSS FOR KARNATAKA STATE..

SUB–STATION SINLE LINE DIAGRAM WITH 11KV FEEDER DETAILS FOR GADAGD DIVISION UNDER HUBLI CIRCLE.

SCALE – N.T.S.

DRG.NO.MEC/19.56/Q707/HBL/ID/004

SHEET 2 OF 8

REV. 0

REV./SEC. CONCURRED BY

DRG.NO.MEC/19.56/Q707/HBL/ID/004

GADAG DIVISION

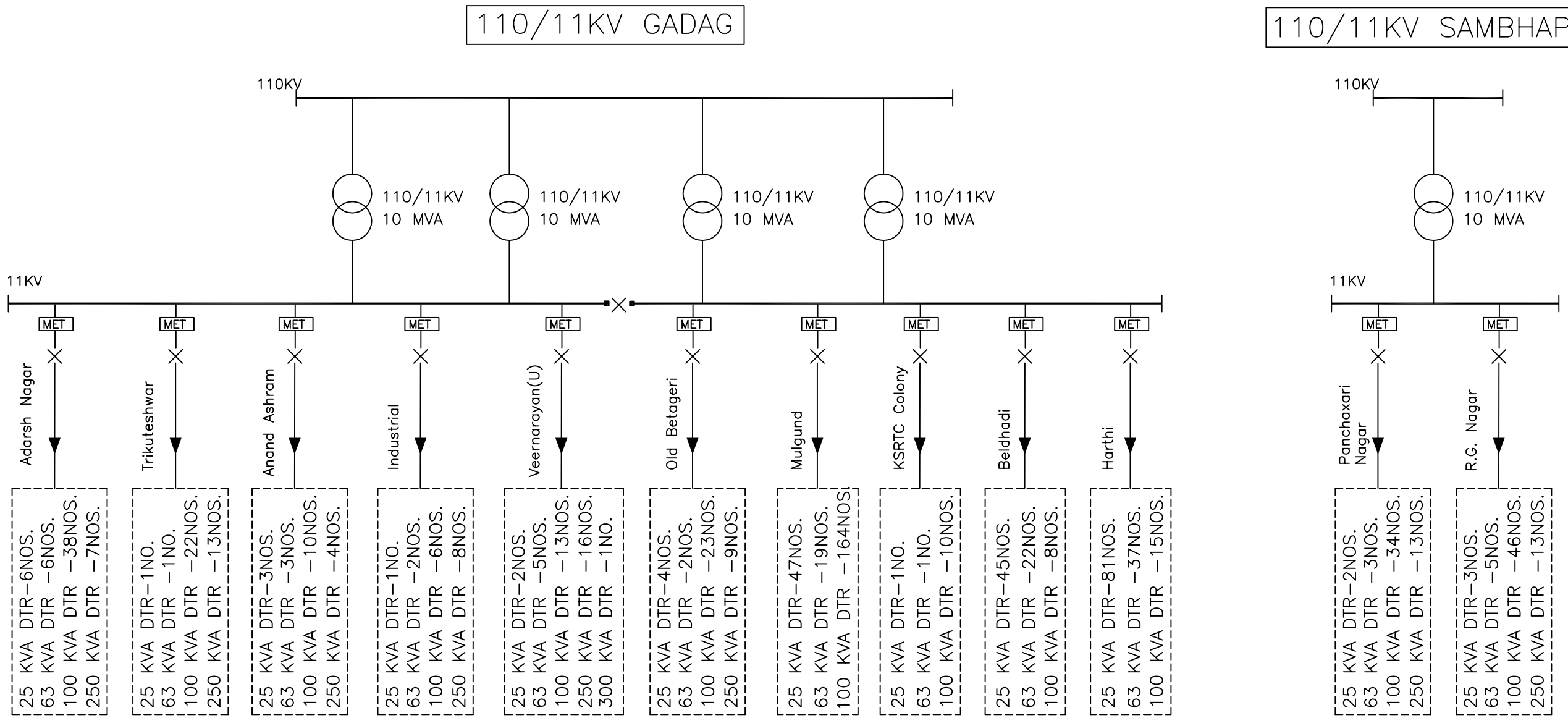

POWER FINANCE CORPORATION. NEW DELHI.

CENTRAL ELECTRICITY REGULATORY COMMISSION. NEW DELHI.

मेकॉन लिमिटेड

MECON LIMITED

ISO 9001 COMPANY

NOTE: –

THIS DRAWING PREPARED BASED ON FIRST HAND INFORMATION RECEIVED FROM HESCOM FOR SELECTED CIRCLE AND OUR FIELD VISIT.

REV. NO.	DATE	ZONE	DESCRIPTION	BY	VERIFIED

REVISIONS

REV./SEC. — CONCURRED BY

REFERENCES — DRG. NO.

THIS DRAWING IS THE PROPERTY OF MECON AND IS ISSUED FOR THE SPECIFIC PROJECT MENTIONED THEREIN. THIS IS NOT TO BE COPIED OR USED FOR OTHER PROJECTS UNLESS EXPRESSLY PERMITTED BY MECON.

SECTION	ELECTRICAL
LOCATION	KOLKATA
DESIGNED	M.K.JAISWARA
DRAWN	M.K.JAISWARA
CHECKED AND VERIFIED	ROBIN DAS
APPROVED	PRADIP ROY

ASSESMENT OF COMPONENT WISE AT&C LOSS FOR KARNATAKA STATE..

SUB–STATION SINLE LINE DIAGRAM WITH 11KV FEEDER DETAILS FOR GADAGD DIVISION UNDER HUBLI CIRCLE.

SCALE – N.T.S.

DRG.NO.MEC/19.56/Q707/HBL/ID/004

SHEET 3 OF 8

REV. 0

DRG.NO.MEC/19.56/Q707/HBL/ID/004

GADAG DIVISION

110/11KV BETAGERI

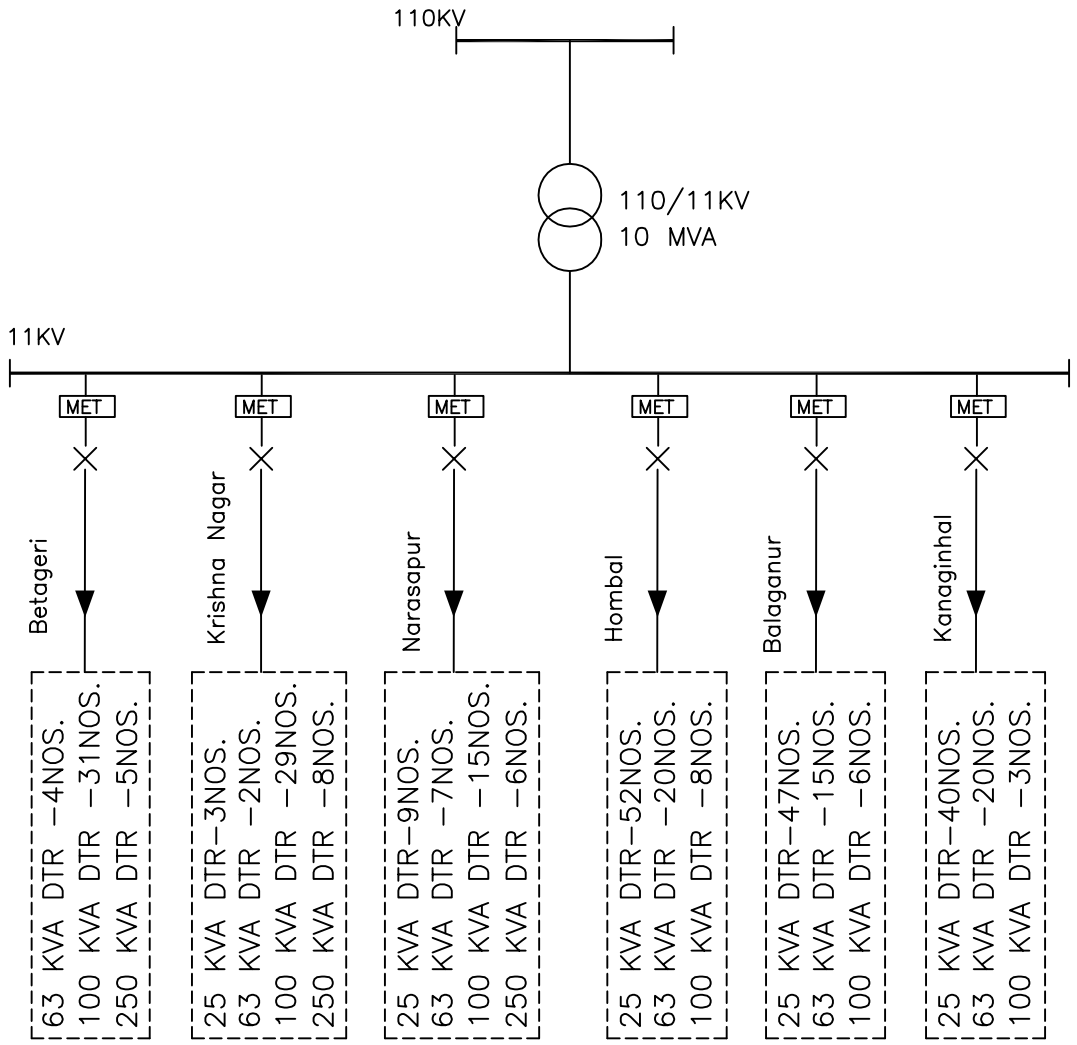

110/11KV LAXMESHWAR

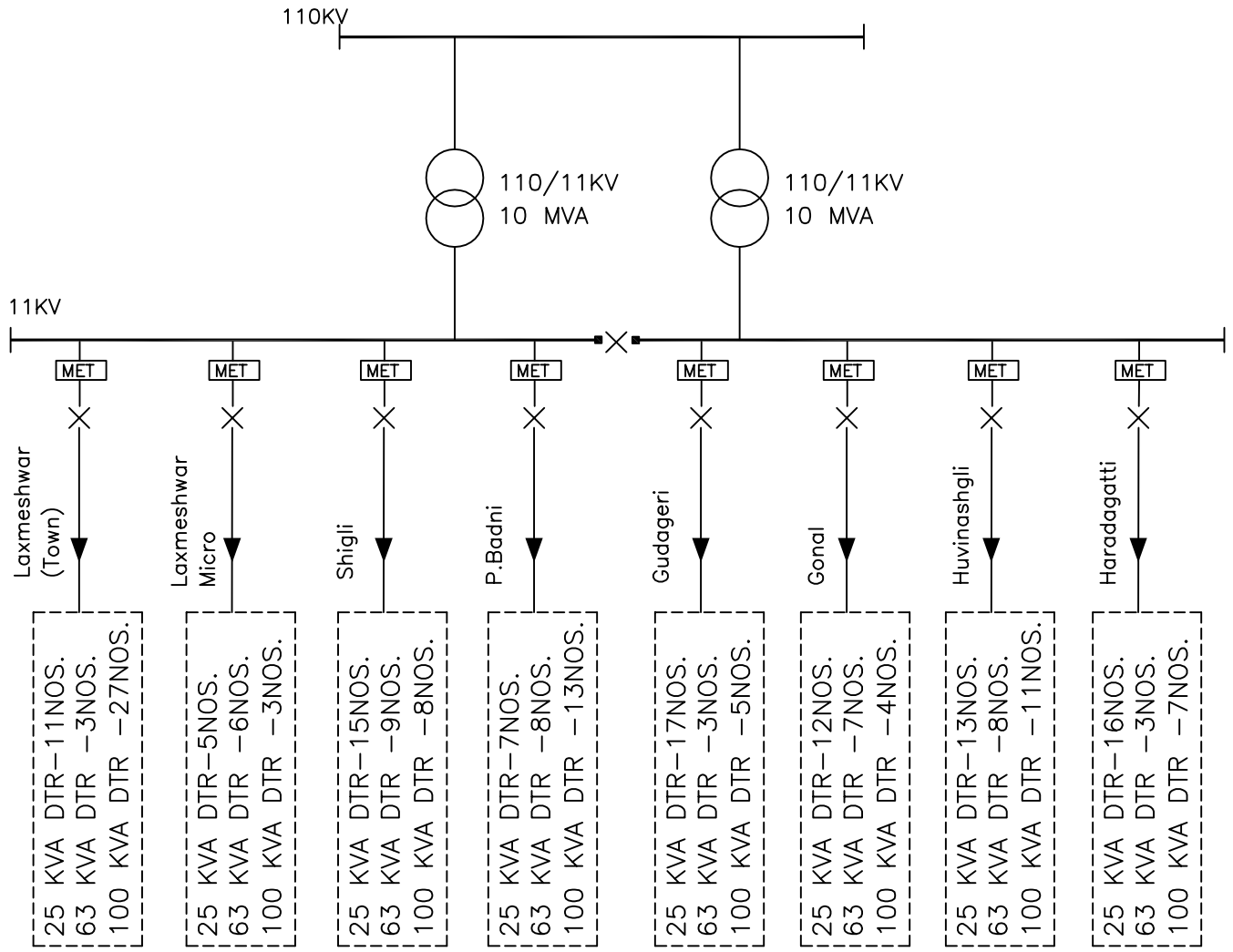

POWER FINANCE CORPORATION. NEW DELHI.

CENTRAL ELECTRICITY REGULATORY COMMISSION. NEW DELHI.

मेकॉन लिमिटेड

MECON LIMITED

NOTE: –

THIS DRAWING PREPARED BASED ON FIRST HAND INFORMATION RECEIVED FROM HESCOM FOR SELECTED CIRCLE AND OUR FIELD VISIT.

REV. NO.	DATE	ZONE	DESCRIPTION	BY	VERIFIED

REVISIONS

REFERENCES | DRG. NO.

THIS DRAWING IS THE PROPERTY OF MECON AND IS ISSUED FOR THE SPECIFIC PROJECT MENTIONED THEREIN. THIS IS NOT TO BE COPIED OR USED FOR OTHER PROJECTS UNLESS EXPRESSLY PERMITTED BY MECON.

SECTION	ELECTRICAL
LOCATION	KOLKATA
DESIGNED	M.K.JAISWARA
DRAWN	M.K.JAISWARA
CHECKED AND VERIFIED	ROBIN DAS
APPROVED	PRADIP ROY

ASSESMENT OF COMPONENT WISE AT&C LOSS FOR KARNATAKA STATE..

SUB–STATION SINLE LINE DIAGRAM WITH 11KV FEEDER DETAILS FOR GADAGD DIVISION UNDER HUBLI CIRCLE.

SCALE – N.T.S.

DRG.NO.MEC/19.56/Q707/HBL/ID/004

SHEET 4 OF 8 | REV. 0

REV./SEC. | CONCURRED BY

DRG.NO.MEC/19.56/Q707/HBL/ID/004

GADAG DIVISION

110/11KV MUNDARGI

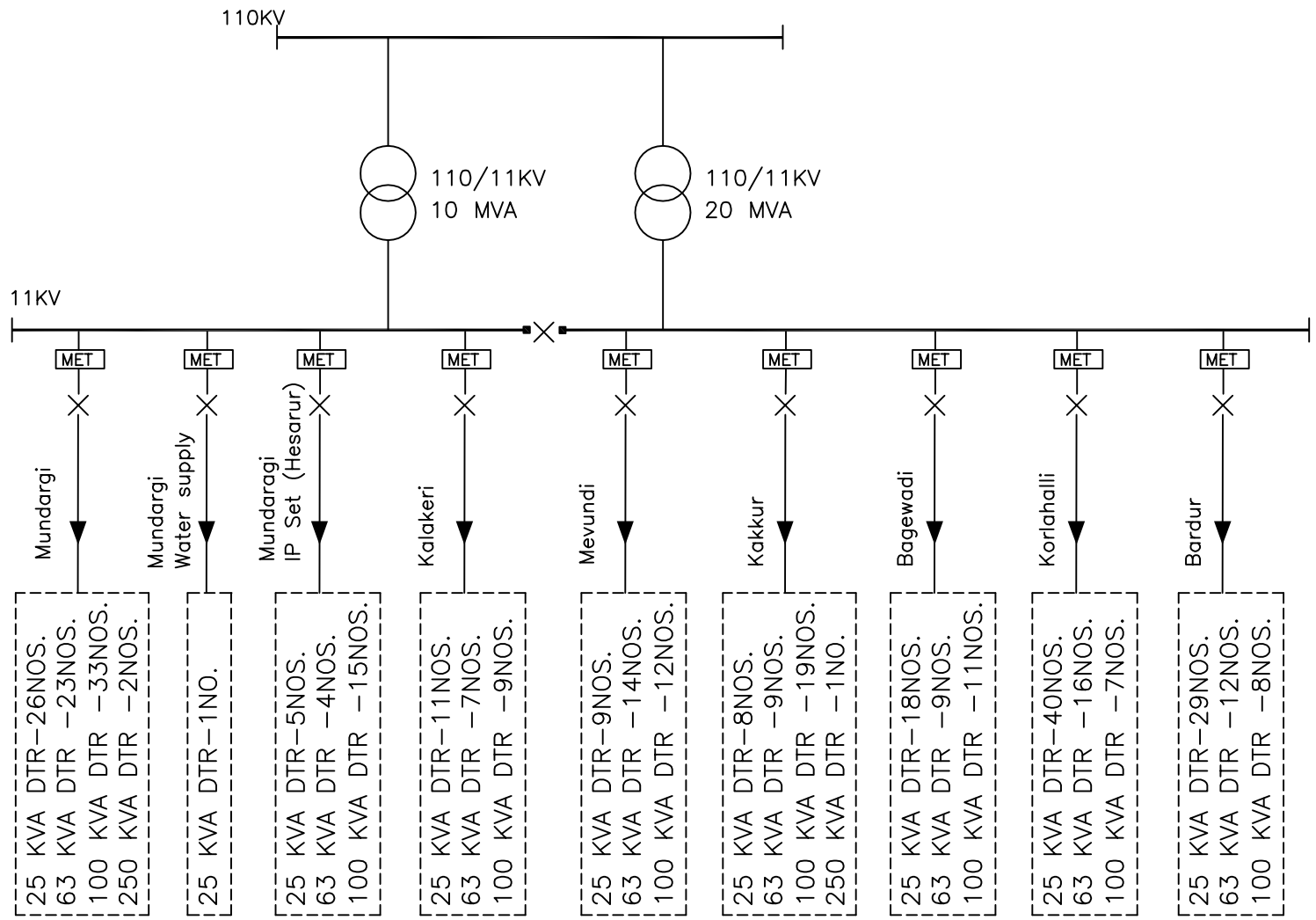

110/11KV DAMBAL

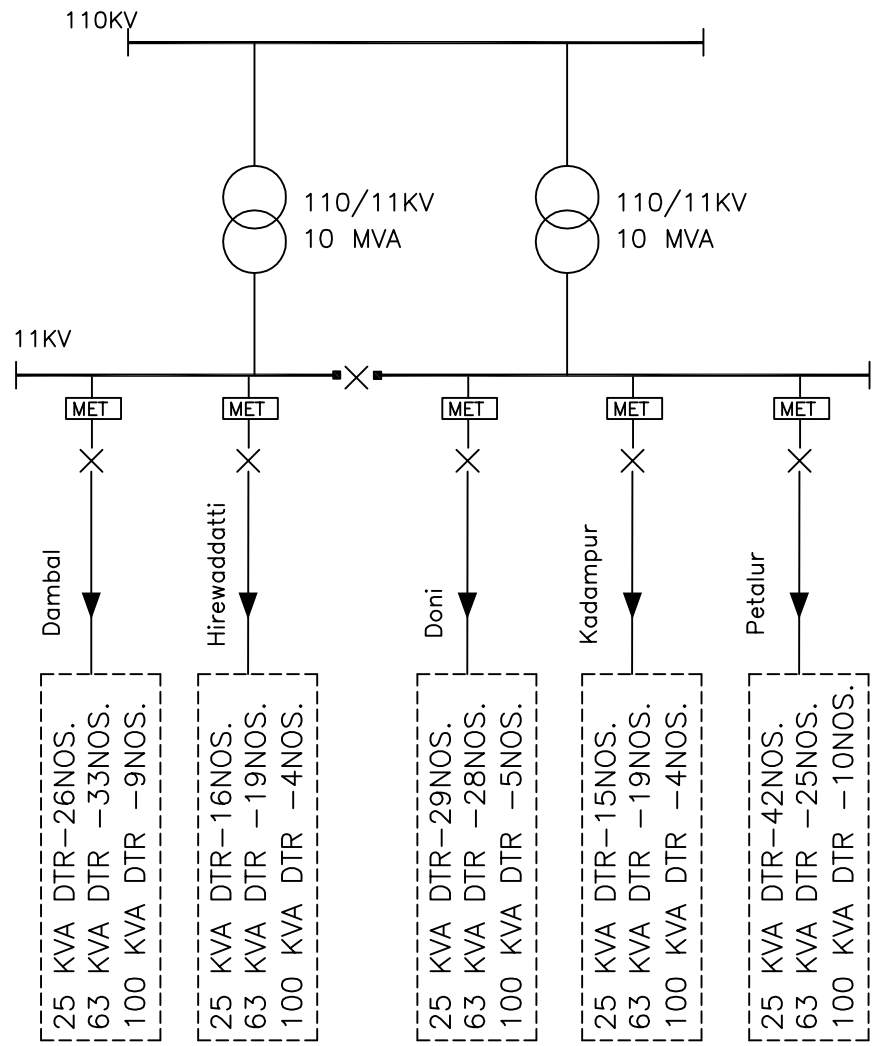

POWER FINANCE CORPORATION. NEW DELHI.

CENTRAL ELECTRICITY REGULATORY COMMISSION. NEW DELHI.

मेकॉन लिमिटेड

MECON LIMITED

NOTE: –

THIS DRAWING PREPARED BASED ON FIRST HAND INFORMATION RECEIVED FROM HESCOM FOR SELECTED CIRCLE AND OUR FIELD VISIT.

REV. NO.	DATE	ZONE	DESCRIPTION	BY	VERIFIED

REVISIONS

REFERENCES | DRG. NO.

THIS DRAWING IS THE PROPERTY OF MECON AND IS ISSUED FOR THE SPECIFIC PROJECT MENTIONED THEREIN. THIS IS NOT TO BE COPIED OR USED FOR OTHER PROJECTS UNLESS EXPRESSLY PERMITTED BY MECON.

SECTION	ELECTRICAL
LOCATION	KOLKATA
DESIGNED	M.K.JAISWARA
DRAWN	M.K.JAISWARA
CHECKED AND VERIFIED	ROBIN DAS
APPROVED	PRADIP ROY

ASSESMENT OF COMPONENT WISE AT&C LOSS FOR KARNATAKA STATE..

SUB-STATION SINLE LINE DIAGRAM WITH 11KV FEEDER DETAILS FOR GADAGD DIVISION UNDER HUBLI CIRCLE.

SCALE – N.T.S.

DRG.NO.MEC/19.56/Q707/HBL/ID/004

SHEET 5 OF 8

REV. 0

REV./SEC. CONCURRED BY

DRG.NO.MEC/19.56/Q707/HBL/ID/004

GADAG DIVISION

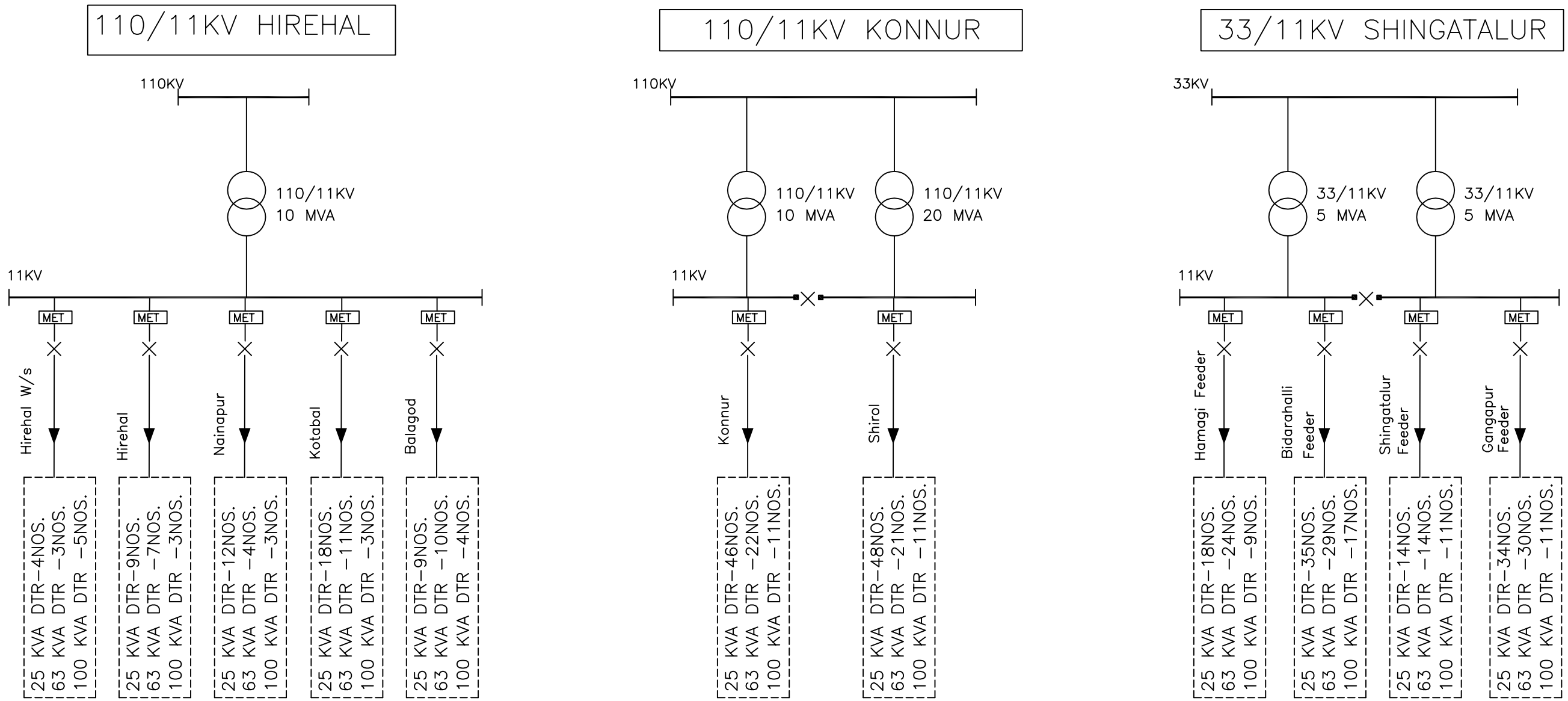

POWER FINANCE CORPORATION. NEW DELHI.

CENTRAL ELECTRICITY REGULATORY COMMISSION. NEW DELHI.

मेकॉन लिमिटेड

MECON LIMITED

ISO 9001 COMPANY

NOTE: –

THIS DRAWING PREPARED BASED ON FIRST HAND INFORMATION RECEIVED FROM HESCOM FOR SELECTED CIRCLE AND OUR FIELD VISIT.

REV. NO.	DATE	ZONE	DESCRIPTION	BY	VERIFIED

REVISIONS

REFERENCES	DRG. NO.

THIS DRAWING IS THE PROPERTY OF MECON AND IS ISSUED FOR THE SPECIFIC PROJECT MENTIONED THEREIN. THIS IS NOT TO BE COPIED OR USED FOR OTHER PROJECTS UNLESS EXPRESSLY PERMITTED BY MECON.

SECTION	ELECTRICAL
LOCATION	KOLKATA
DESIGNED	M.K.JAISWARA
DRAWN	M.K.JAISWARA
CHECKED AND VERIFIED	ROBIN DAS
APPROVED	PRADIP ROY

ASSESMENT OF COMPONENT WISE AT&C LOSS FOR KARNATAKA STATE..

SUB-STATION SINLE LINE DIAGRAM WITH 11KV FEEDER DETAILS FOR GADAGD DIVISION UNDER HUBLI CIRCLE.

SCALE – N.T.S.

SHEET 6 OF 8

REV. 0

DRG.NO.MEC/19.56/Q707/HBL/ID/004

REV./SEC.

CONCURRED BY

DRG.NO.MEC/19.56/Q707/HBL/ID/004

GADAG DIVISION

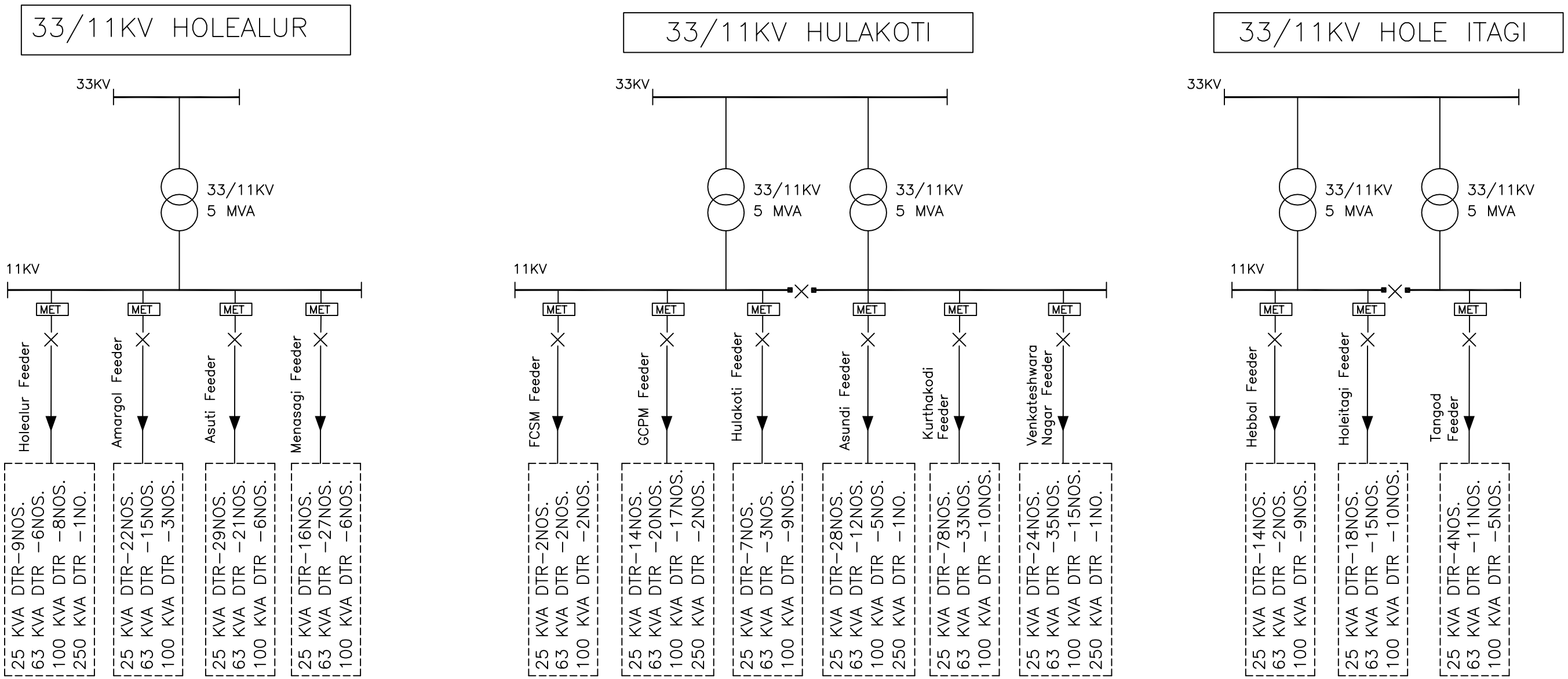

POWER FINANCE CORPORATION. NEW DELHI.

CENTRAL ELECTRICITY REGULATORY COMMISSION. NEW DELHI.

मेकॉन लिमिटेड

MECON LIMITED

NOTE: –

THIS DRAWING PREPARED BASED ON FIRST HAND INFORMATION RECEIVED FROM HESCOM FOR SELECTED CIRCLE AND OUR FIELD VISIT.

REV. NO.	DATE	ZONE	DESCRIPTION	BY	VERIFIED

REVISIONS

REFERENCES | DRG. NO.

THIS DRAWING IS THE PROPERTY OF MECON AND IS ISSUED FOR THE SPECIFIC PROJECT MENTIONED THEREIN. THIS IS NOT TO BE COPIED OR USED FOR OTHER PROJECTS UNLESS EXPRESSLY PERMITTED BY MECON.

SECTION	ELECTRICAL
LOCATION	KOLKATA
DESIGNED	M.K.JAISWARA
DRAWN	M.K.JAISWARA
CHECKED AND VERIFIED	ROBIN DAS
APPROVED	PRADIP ROY

ASSESMENT OF COMPONENT WISE AT&C LOSS FOR KARNATAKA STATE..

SUB-STATION SINLE LINE DIAGRAM WITH 11KV FEEDER DETAILS FOR GADAGD DIVISION UNDER HUBLI CIRCLE.

SCALE – N.T.S.

DRG.NO.MEC/19.56/Q707/HBL/ID/004

SHEET 7 OF 8

REV. 0

REV./SEC. CONCURRED BY

DRG.NO.MEC/19.56/Q707/HBL/ID/004

GADAG DIVISION

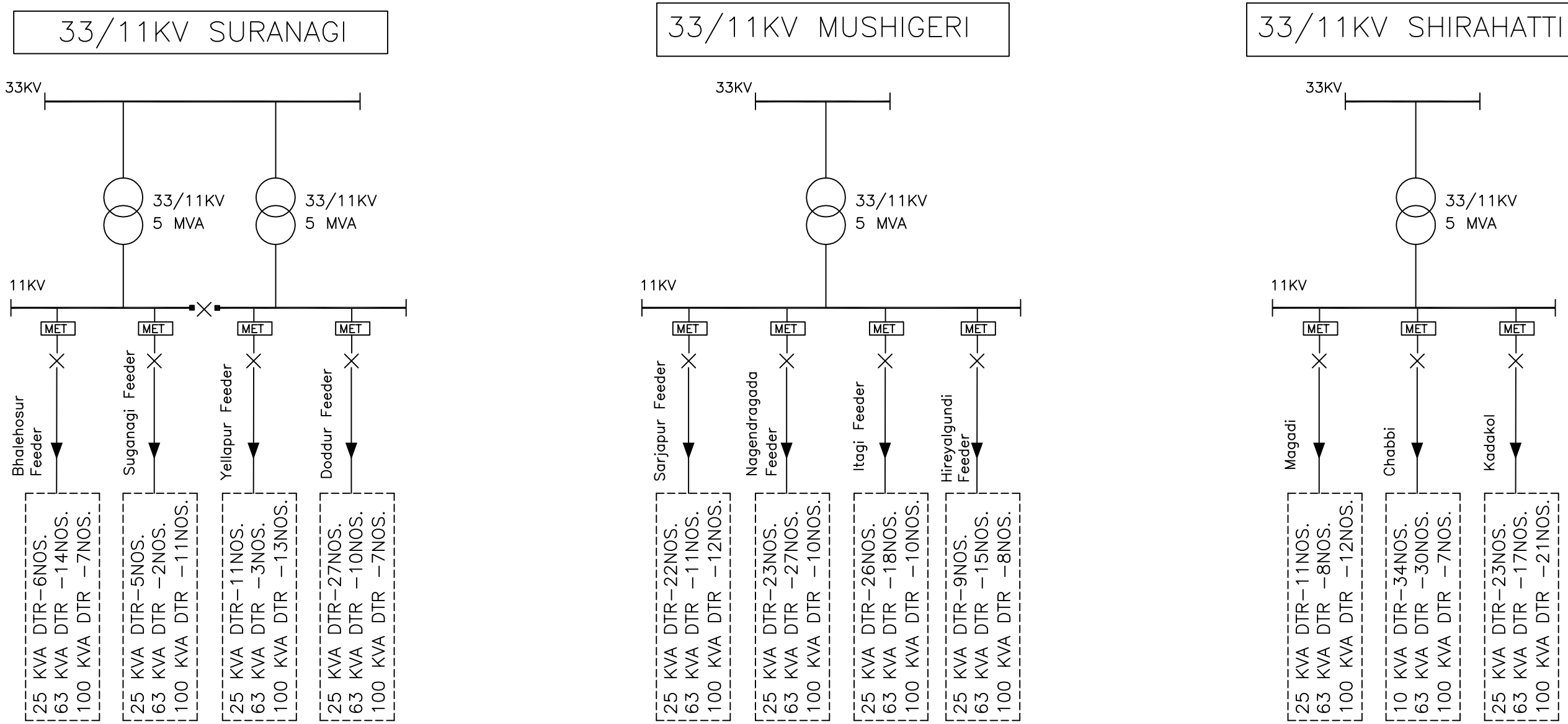

POWER FINANCE CORPORATION. NEW DELHI.

CENTRAL ELECTRICITY REGULATORY COMMISSION. NEW DELHI.

मेकॉन लिमिटेड

MECON LIMITED

NOTE: –

THIS DRAWING PREPARED BASED ON FIRST HAND INFORMATION RECEIVED FROM HESCOM FOR SELECTED CIRCLE AND OUR FIELD VISIT.

REV. NO.	DATE	ZONE	DESCRIPTION	BY	VERIFIED

REVISIONS

REFERENCES | DRG. NO.

THIS DRAWING IS THE PROPERTY OF MECON AND IS ISSUED FOR THE SPECIFIC PROJECT MENTIONED THEREIN. THIS IS NOT TO BE COPIED OR USED FOR OTHER PROJECTS UNLESS EXPRESSLY PERMITTED BY MECON.

SECTION	ELECTRICAL
LOCATION	KOLKATA
DESIGNED	M.K.JAISWARA
DRAWN	M.K.JAISWARA
CHECKED AND VERIFIED	ROBIN DAS
APPROVED	PRADIP ROY

ASSESMENT OF COMPONENT WISE AT&C LOSS FOR KARNATAKA STATE..

SUB-STATION SINLE LINE DIAGRAM WITH 11KV FEEDER DETAILS FOR GADAGD DIVISION UNDER HUBLI CIRCLE.

SCALE – N.T.S.

DRG.NO.MEC/19.56/Q707/HBL/ID/004

SHEET 8 OF 8

REV. 0

REV./SEC. CONCURRED BY

DRAWINGS AND DIAGRAMS
OF
CHIKODI CIRCLE

DRAWING DESCRIPTION : 110KV & 33KV POWER INTERCONNECTION DIAGRAM OF CHIKODI CIRCLE.

DRAWING NO. : MEC/19.56/Q707/CKD/ID/001

NO. OF SHEETS : 01

DRG.NO.MEC/19.56/Q707/CKD/ID/001

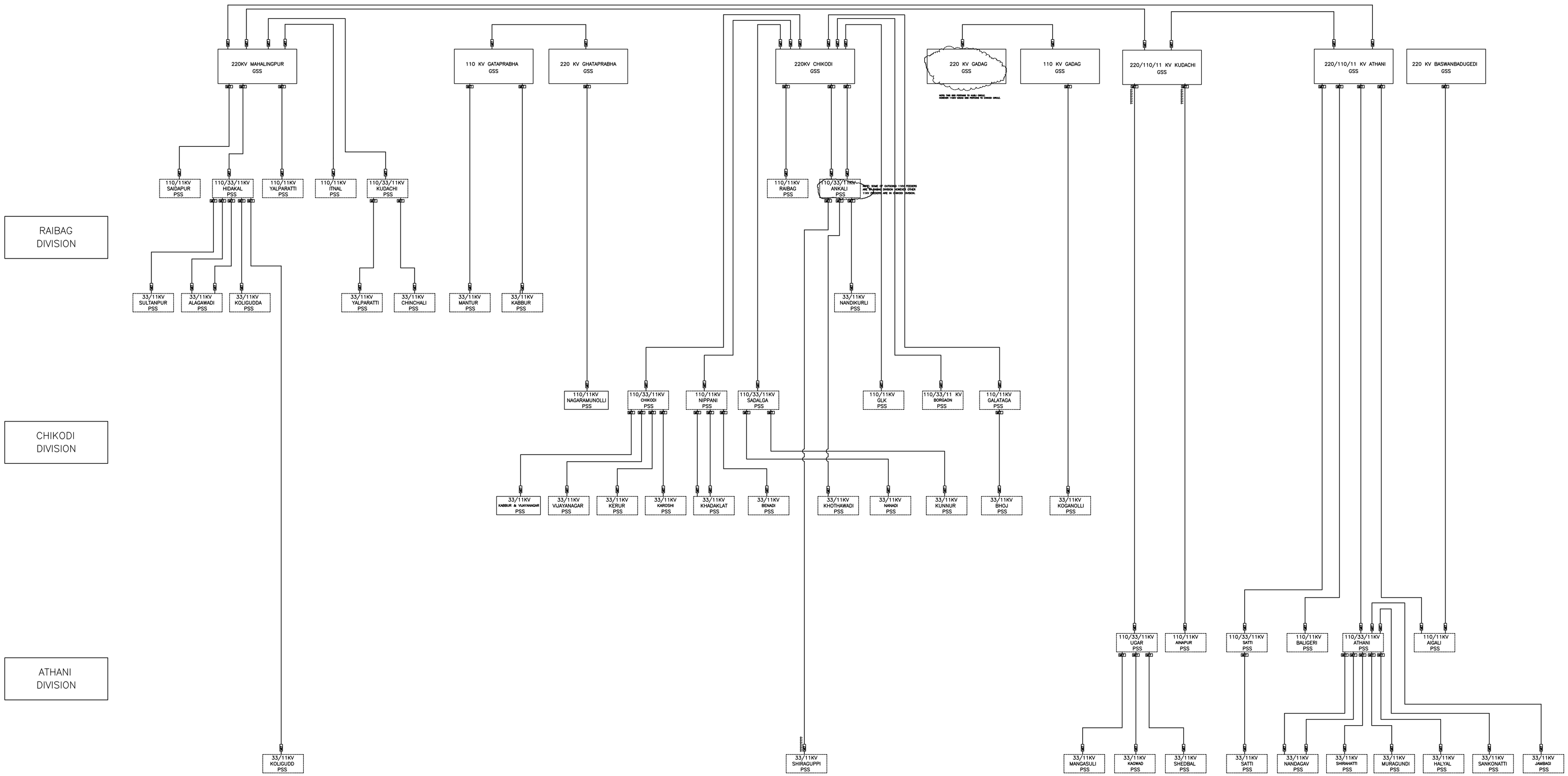

POWER FINANCE CORPORATION. NEW DELHI.

CENTRAL ELECTRICITY REGULATORY COMMISSION. NEW DELHI.

मेकॉन लिमिटेड

MECON LIMITED

ISO 9001 COMPANY

NOTE: –

THIS DRAWING PREPARED BASED ON INFORMATION RECEIVED FROM HESCOM FOR SELECTED CIRCLE AND OUR FIELD VISIT.

REV. NO.	DATE	ZONE	DESCRIPTION	BY	VERIFIED

REVISIONS

REFERENCES	DRG. NO.

THIS DRAWING IS THE PROPERTY OF MECON AND IS ISSUED FOR THE SPECIFIC PROJECT MENTIONED THEREIN. THIS IS NOT TO BE COPIED OR USED FOR OTHER PROJECTS UNLESS EXPRESSLY PERMITTED BY MECON.

SECTION	ELECTRICAL
LOCATION	KOLKATA
DESIGNED	M.K.JAISWARA
DRAWN	M.K.JAISWARA
CHECKED AND VERIFIED	ROBIN DAS
APPROVED	PRADIP ROY

ASSESMENT OF COMPONENT WISE AT&C LOSS FOR KARNATAKA STATE

110KV & 33KV POWER INTERCONNECTION DIAGRAM OF CHIKODI CIRCLE.

SCALE – N.T.S.

DRG.NO.MEC/19.56/Q707/CKD/ID/001

SHEET 1 OF 1

REV. 0

REV./SEC. CONCURRED BY

DRAWING DESCRIPTION : SUB-STATION SLD WITH 11KV FEEDER DETAILS FOR RAIBAG DIVISION UNDER CHIKODI CIRCLE.

DRAWING NO. : MEC/19.56/Q707/CKD/ID/002

NO. OF SHEETS : 06

DRG.NO.MEC/19.56/Q707/CKD/ID/002

RAIBAG DIVISION

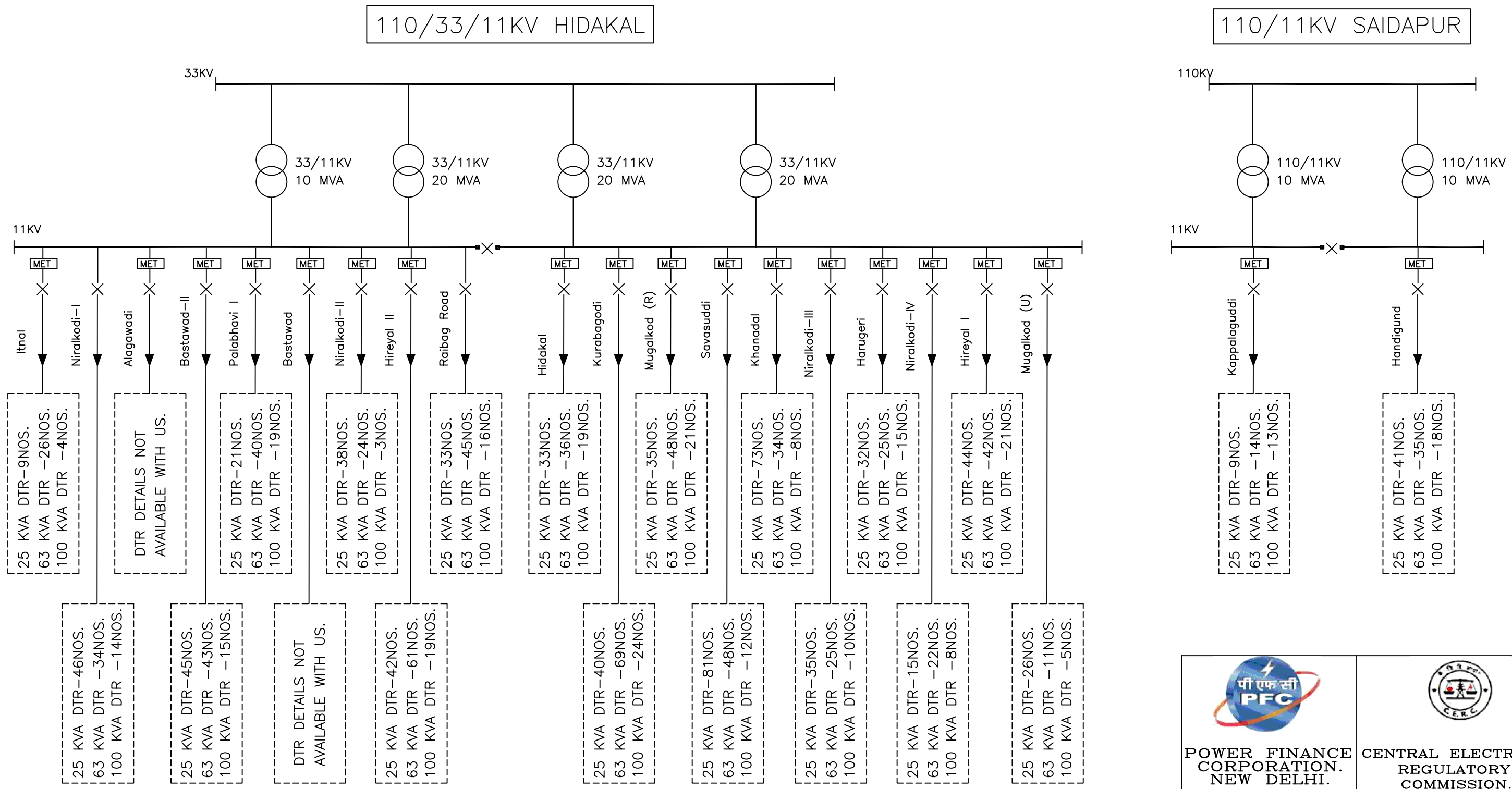

POWER FINANCE CORPORATION. NEW DELHI.

CENTRAL ELECTRICITY REGULATORY COMMISSION. NEW DELHI.

मेकॉन लिमिटेड

MECON LIMITED

NOTE: –

THIS DRAWING PREPARED BASED ON FIRST HAND INFORMATION RECEIVED FROM HESCOM FOR SELECTED CIRCLE AND OUR FIELD VISIT.

REV. NO.	DATE	ZONE	DESCRIPTION	BY	VERIFIED

REVISIONS

REFERENCES | DRG. NO.

THIS DRAWING IS THE PROPERTY OF MECON AND IS ISSUED FOR THE SPECIFIC PROJECT MENTIONED THEREIN. THIS IS NOT TO BE COPIED OR USED FOR OTHER PROJECTS UNLESS EXPRESSLY PERMITTED BY MECON.

SECTION	ELECTRICAL
LOCATION	KOLKATA
DESIGNED	M.K.JAISWARA
DRAWN	M.K.JAISWARA
CHECKED AND VERIFIED	ROBIN DAS
APPROVED	PRADIP ROY

ASSESMENT OF COMPONENT WISE AT&C LOSS FOR KARNATAKA STATE..

SUB-STATION SINLE LINE DIAGRAM WITH 11KV FEEDER DETAILS FOR RAIBAG DIVISION UNDER CHIKODI CIRCLE.

SCALE – N.T.S.

DRG.NO.MEC/19.56/Q707/CKD/ID/002

SHEET 1 OF 6

REV. 0

REV./SEC. | CONCURRED BY

DRG.NO.MEC/19.56/Q707/CKD/ID/002

RAIBAG DIVISION

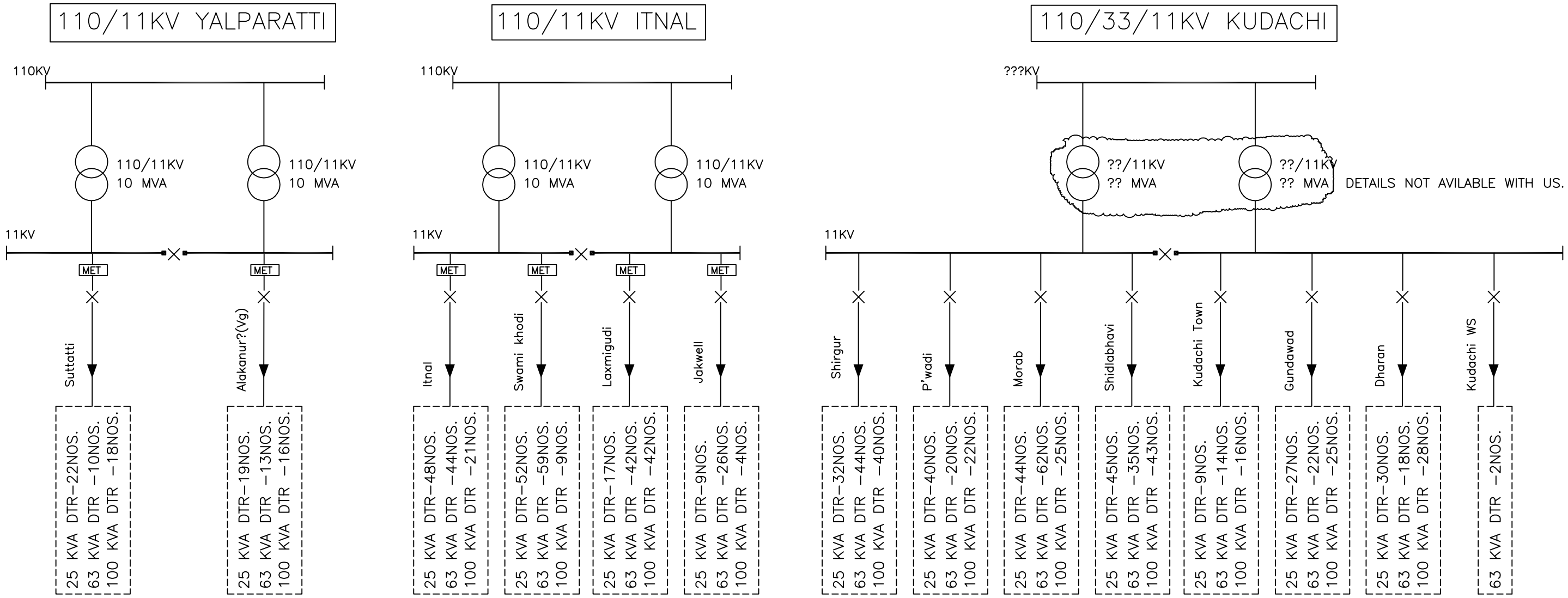

POWER FINANCE CORPORATION. NEW DELHI.

CENTRAL ELECTRICITY REGULATORY COMMISSION. NEW DELHI.

मेकॉन लिमिटेड

MECON LIMITED

NOTE: –

THIS DRAWING PREPARED BASED ON FIRST HAND INFORMATION RECEIVED FROM HESCOM FOR SELECTED CIRCLE AND OUR FIELD VISIT.

REV. NO.	DATE	ZONE	DESCRIPTION	BY	VERIFIED

REVISIONS

REFERENCES | DRG. NO.

THIS DRAWING IS THE PROPERTY OF MECON AND IS ISSUED FOR THE SPECIFIC PROJECT MENTIONED THEREIN. THIS IS NOT TO BE COPIED OR USED FOR OTHER PROJECTS UNLESS EXPRESSLY PERMITTED BY MECON.

SECTION	ELECTRICAL
LOCATION	KOLKATA
DESIGNED	M.K.JAISWARA
DRAWN	M.K.JAISWARA
CHECKED AND VERIFIED	ROBIN DAS
APPROVED	PRADIP ROY

ASSESMENT OF COMPONENT WISE AT&C LOSS FOR KARNATAKA STATE..

SUB-STATION SINLE LINE DIAGRAM WITH 11KV FEEDER DETAILS FOR RAIBAG DIVISION UNDER CHIKODI CIRCLE.

SCALE – N.T.S.

DRG.NO.MEC/19.56/Q707/CKD/ID/002

SHEET 2 OF 6

REV. 0

REV./SEC. | CONCURRED BY

RAIBAG DIVISION

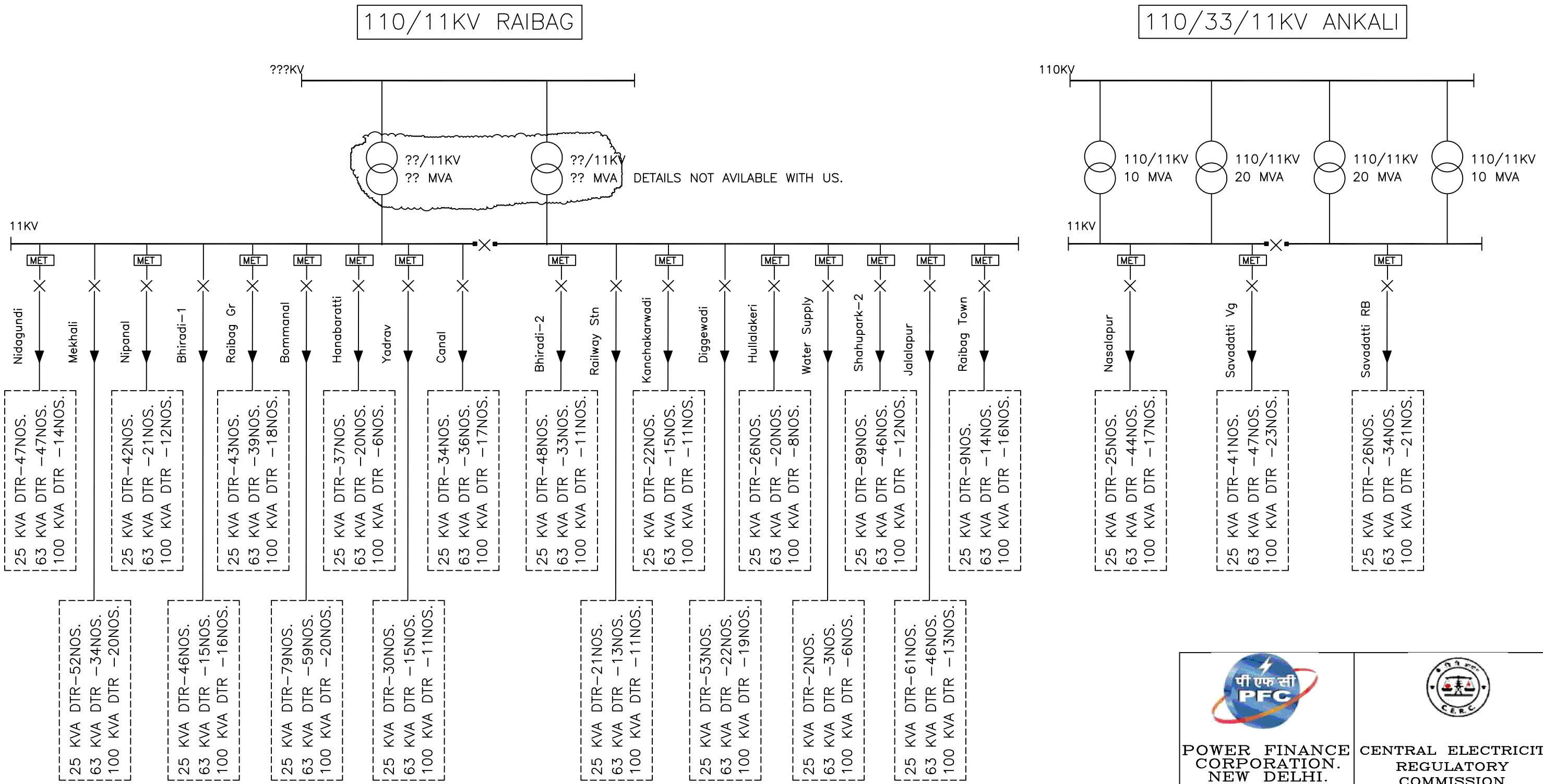

POWER FINANCE CORPORATION. NEW DELHI.

CENTRAL ELECTRICITY REGULATORY COMMISSION. NEW DELHI.

मेकॉन लिमिटेड

MECON LIMITED

NOTE: –

THIS DRAWING PREPARED BASED ON FIRST HAND INFORMATION RECEIVED FROM HESCOM FOR SELECTED CIRCLE AND OUR FIELD VISIT.

REV. NO.	DATE	ZONE	DESCRIPTION	BY	VERIFIED
			REVISIONS		

REV./SEC. — CONCURRED BY

REFERENCES — DRG. NO.

THIS DRAWING IS THE PROPERTY OF MECON AND IS ISSUED FOR THE SPECIFIC PROJECT MENTIONED THEREIN. THIS IS NOT TO BE COPIED OR USED FOR OTHER PROJECTS UNLESS EXPRESSLY PERMITTED BY MECON.

SECTION	ELECTRICAL
LOCATION	KOLKATA
DESIGNED	M.K.JAISWARA
DRAWN	M.K.JAISWARA
CHECKED AND VERIFIED	ROBIN DAS
APPROVED	PRADIP ROY

ASSESMENT OF COMPONENT WISE AT&C LOSS FOR KARNATAKA STATE..

SUB-STATION SINLE LINE DIAGRAM WITH 11KV FEEDER DETAILS FOR RAIBAG DIVISION UNDER CHIKODI CIRCLE.

SCALE – N.T.S.

DRG.NO.MEC/19.56/Q707/CKD/ID/002

SHEET 3 OF 6 — REV. 0

DRG.NO.MEC/19.56/Q707/CKD/ID/002

RAIBAG DIVISION

33/11KV SULTANPUR

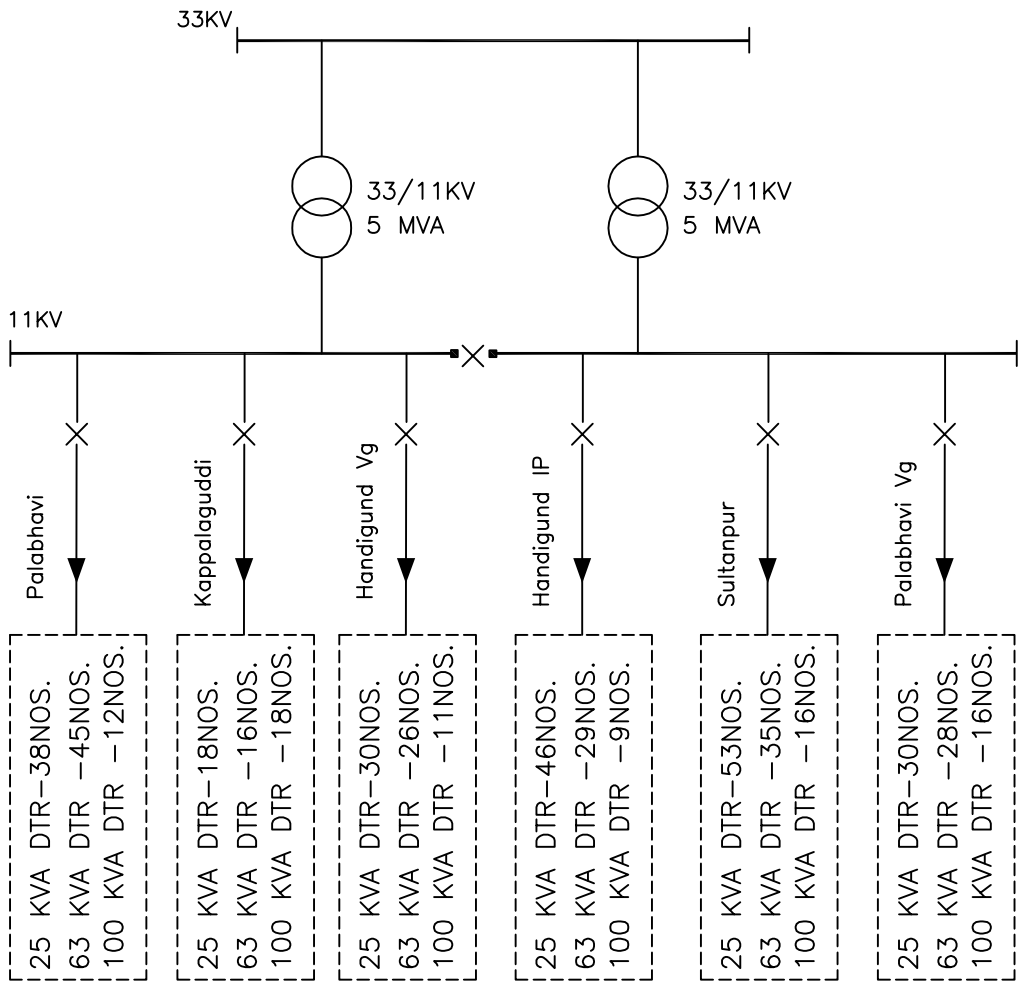

33/11KV NANDIKURLI

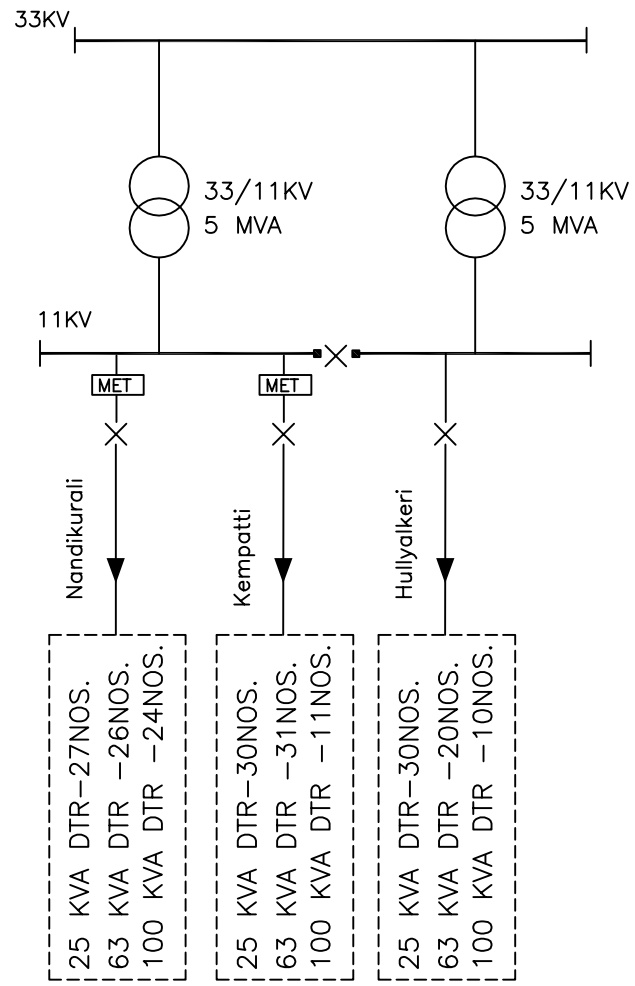

33/11KV KOLIGUDDA

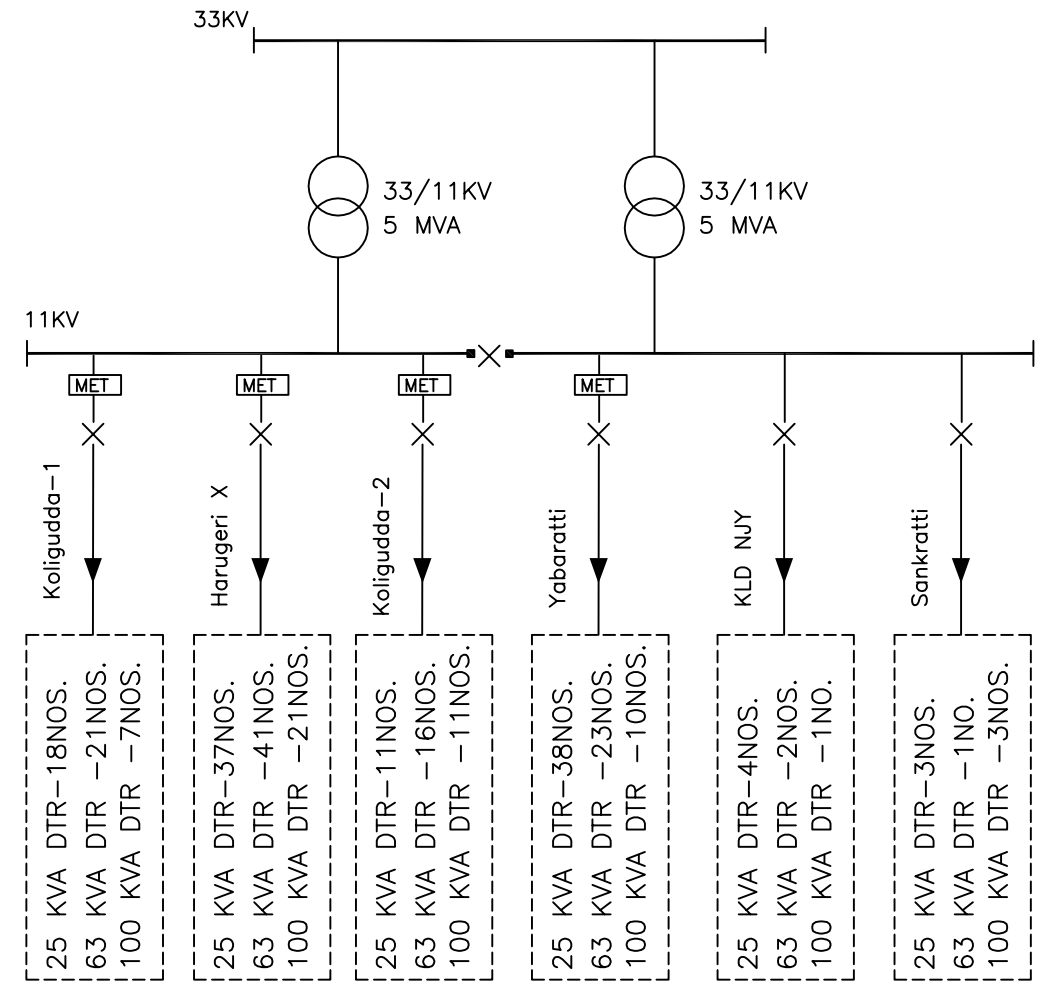

POWER FINANCE CORPORATION. NEW DELHI.

CENTRAL ELECTRICITY REGULATORY COMMISSION. NEW DELHI.

मेकॉन लिमिटेड

MECON LIMITED

NOTE: –

THIS DRAWING PREPARED BASED ON FIRST HAND INFORMATION RECEIVED FROM HESCOM FOR SELECTED CIRCLE AND OUR FIELD VISIT.

REV. NO.	DATE	ZONE	DESCRIPTION	BY	VERIFIED

REVISIONS

REFERENCES | DRG. NO.

THIS DRAWING IS THE PROPERTY OF MECON AND IS ISSUED FOR THE SPECIFIC PROJECT MENTIONED THEREIN. THIS IS NOT TO BE COPIED OR USED FOR OTHER PROJECTS UNLESS EXPRESSLY PERMITTED BY MECON.

SECTION	ELECTRICAL
LOCATION	KOLKATA
DESIGNED	M.K.JAISWARA
DRAWN	M.K.JAISWARA
CHECKED AND VERIFIED	ROBIN DAS
APPROVED	PRADIP ROY

ASSESMENT OF COMPONENT WISE AT&C LOSS FOR KARNATAKA STATE..

SUB-STATION SINLE LINE DIAGRAM WITH 11KV FEEDER DETAILS FOR RAIBAG DIVISION UNDER CHIKODI CIRCLE.

SCALE – N.T.S.

DRG.NO.MEC/19.56/Q707/CKD/ID/002

SHEET 4 OF 6

REV. 0

REV./SEC. CONCURRED BY

DRG.NO.MEC/19.56/Q707/CKD/ID/002

RAIBAG DIVISION

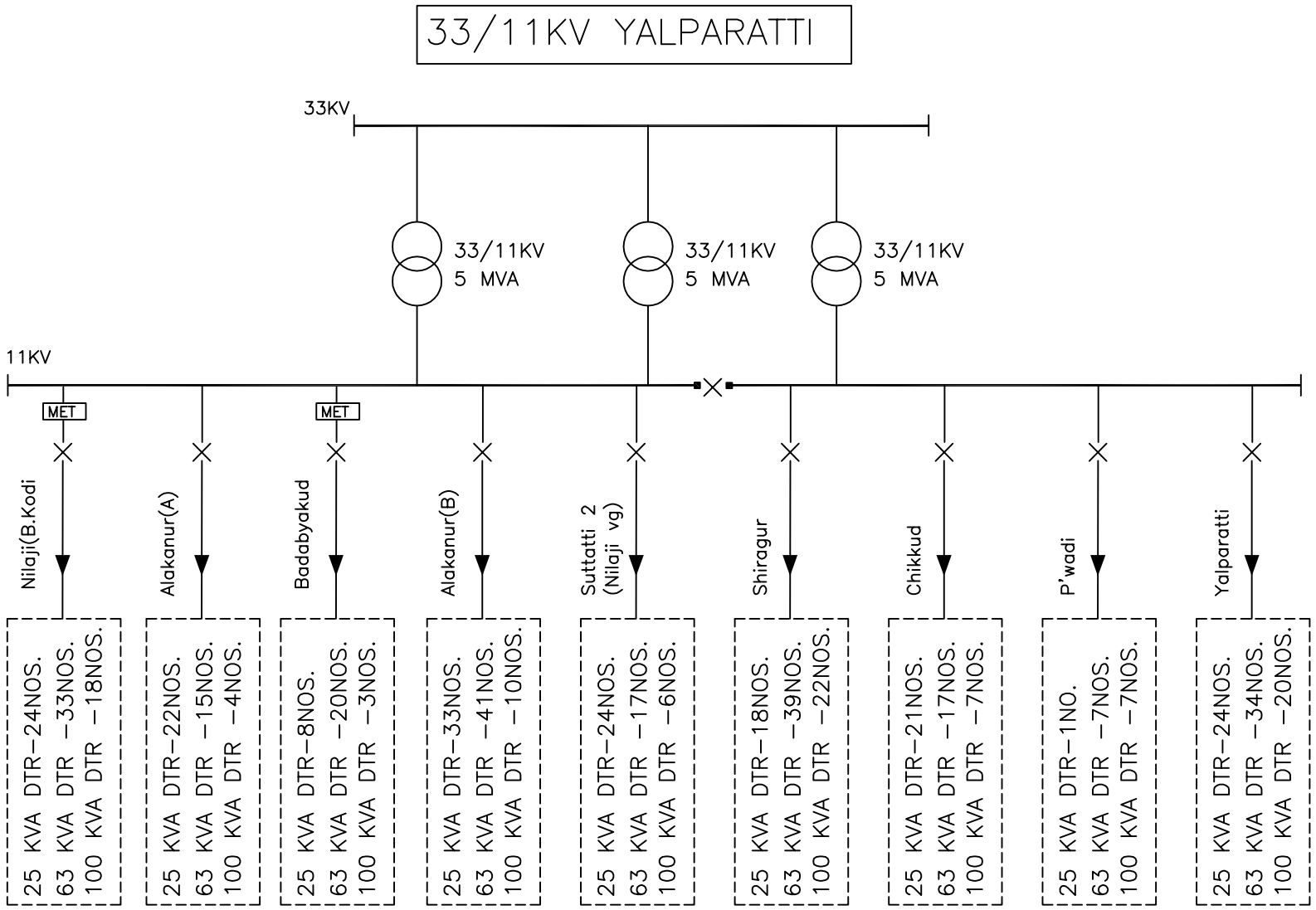

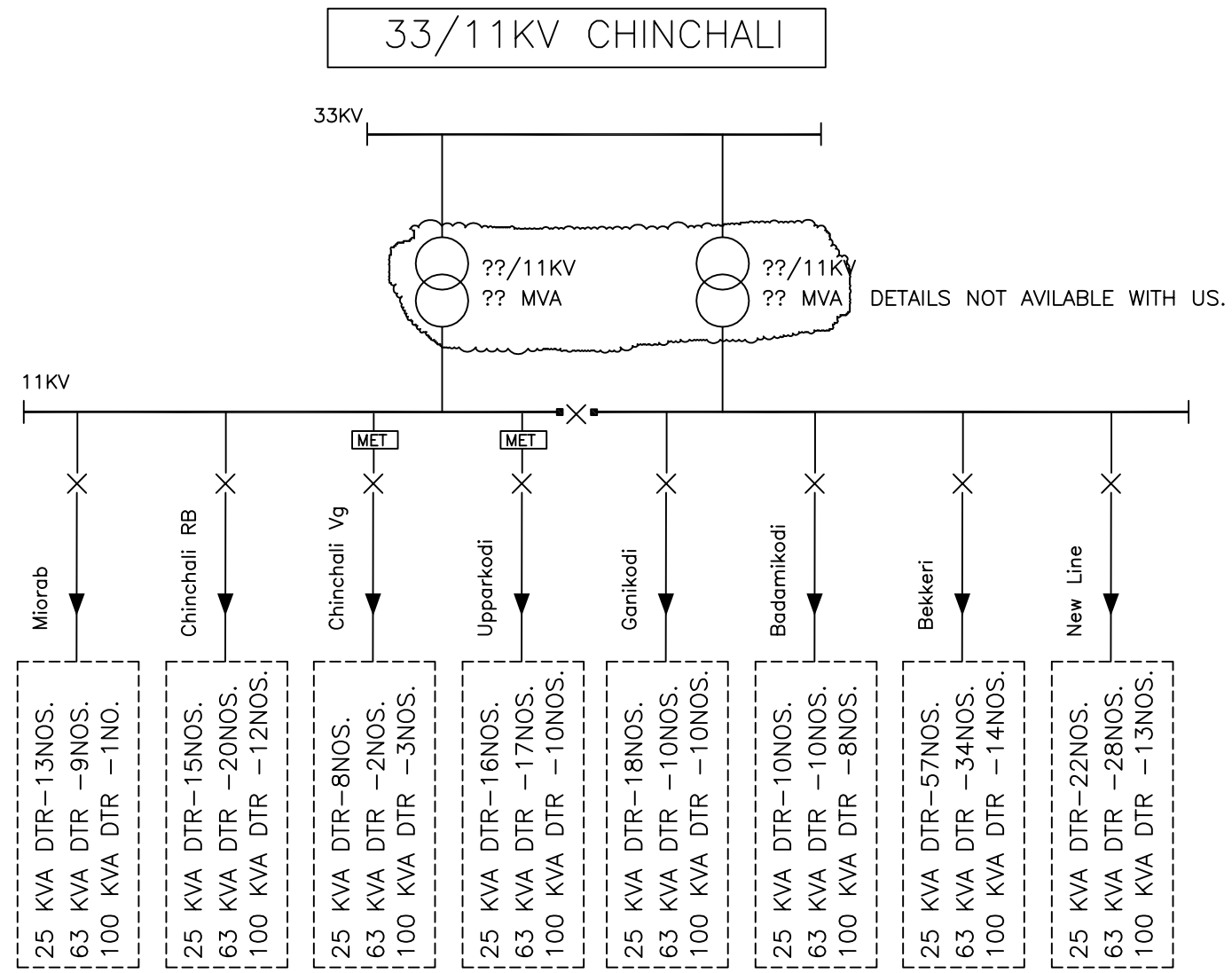

POWER FINANCE CORPORATION. NEW DELHI.

CENTRAL ELECTRICITY REGULATORY COMMISSION. NEW DELHI.

मेकॉन लिमिटेड

MECON LIMITED

NOTE: –

THIS DRAWING PREPARED BASED ON FIRST HAND INFORMATION RECEIVED FROM HESCOM FOR SELECTED CIRCLE AND OUR FIELD VISIT.

REV. NO.	DATE	ZONE	DESCRIPTION	BY	VERIFIED

REVISIONS

REFERENCES | DRG. NO.

THIS DRAWING IS THE PROPERTY OF MECON AND IS ISSUED FOR THE SPECIFIC PROJECT MENTIONED THEREIN. THIS IS NOT TO BE COPIED OR USED FOR OTHER PROJECTS UNLESS EXPRESSLY PERMITTED BY MECON.

SECTION	ELECTRICAL
LOCATION	KOLKATA
DESIGNED	M.K.JAISWARA
DRAWN	M.K.JAISWARA
CHECKED AND VERIFIED	ROBIN DAS
APPROVED	PRADIP ROY

ASSESMENT OF COMPONENT WISE AT&C LOSS FOR KARNATAKA STATE..

SUB-STATION SINLE LINE DIAGRAM WITH 11KV FEEDER DETAILS FOR RAIBAG DIVISION UNDER CHIKODI CIRCLE.

SCALE – N.T.S.

DRG.NO.MEC/19.56/Q707/CKD/ID/002

SHEET 5 OF 6 | REV. 0

REV./SEC. | CONCURRED BY

DRG.NO.MEC/19.56/Q707/CKD/ID/002

RAIBAG DIVISION

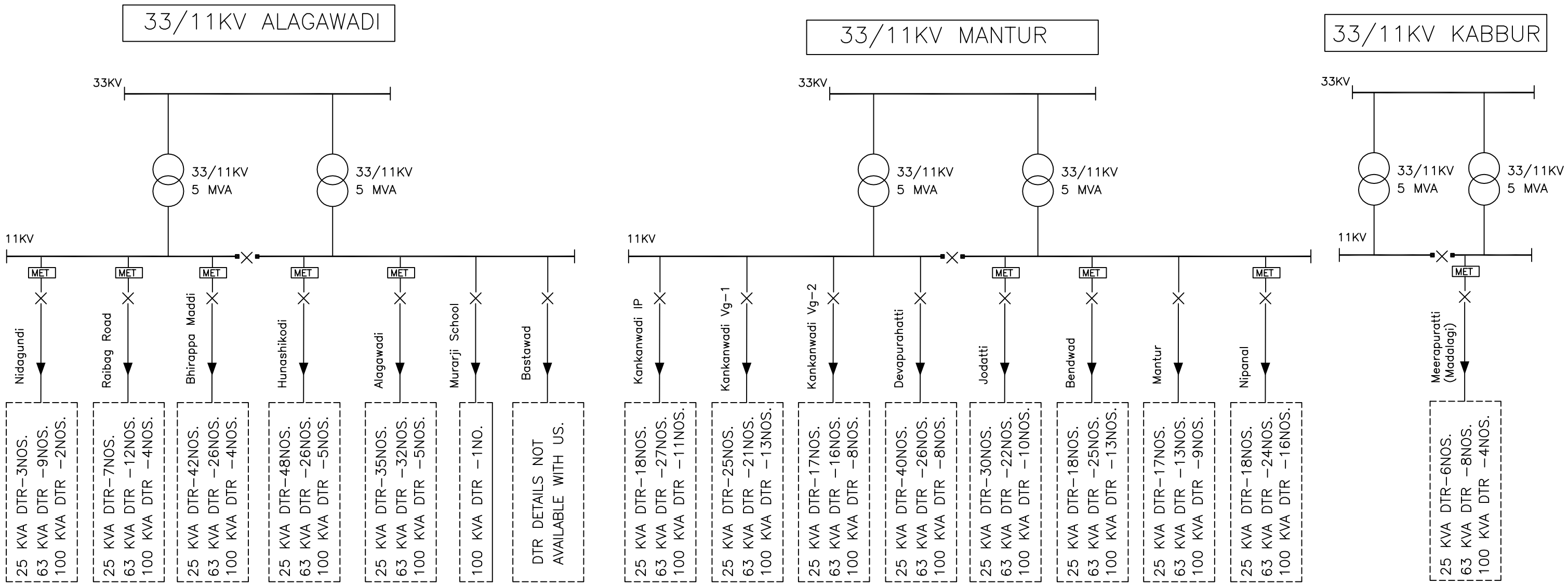

POWER FINANCE CORPORATION. NEW DELHI.

CENTRAL ELECTRICITY REGULATORY COMMISSION. NEW DELHI.

मेकॉन लिमिटेड

MECON LIMITED

NOTE: –

THIS DRAWING PREPARED BASED ON FIRST HAND INFORMATION RECEIVED FROM HESCOM FOR SELECTED CIRCLE AND OUR FIELD VISIT.

REV. NO.	DATE	ZONE	DESCRIPTION	BY	VERIFIED

REVISIONS

REFERENCES | DRG. NO.

THIS DRAWING IS THE PROPERTY OF MECON AND IS ISSUED FOR THE SPECIFIC PROJECT MENTIONED THEREIN. THIS IS NOT TO BE COPIED OR USED FOR OTHER PROJECTS UNLESS EXPRESSLY PERMITTED BY MECON.

SECTION	ELECTRICAL
LOCATION	KOLKATA
DESIGNED	M.K.JAISWARA
DRAWN	M.K.JAISWARA
CHECKED AND VERIFIED	ROBIN DAS
APPROVED	PRADIP ROY

ASSESMENT OF COMPONENT WISE AT&C LOSS FOR KARNATAKA STATE..

SUB-STATION SINLE LINE DIAGRAM WITH 11KV FEEDER DETAILS FOR RAIBAG DIVISION UNDER CHIKODI CIRCLE.

SCALE – N.T.S.

DRG.NO.MEC/19.56/Q707/CKD/ID/002

SHEET 6 OF 6

REV. 0

REV./SEC. CONCURRED BY

DRAWING DESCRIPTION : SUB-STATION SLD WITH 11KV FEEDER DETAILS FOR CHIKODI DIVISION UNDER CHIKODI CIRCLE.

DRAWING NO. : MEC/19.56/Q707/CKD/ID/003

NO. OF SHEETS : 07

DRG.NO.MEC/19.56/Q707/CKD/ID/003

CHIKODI DIVISION

110/11KV NAGARAMUNOLLI

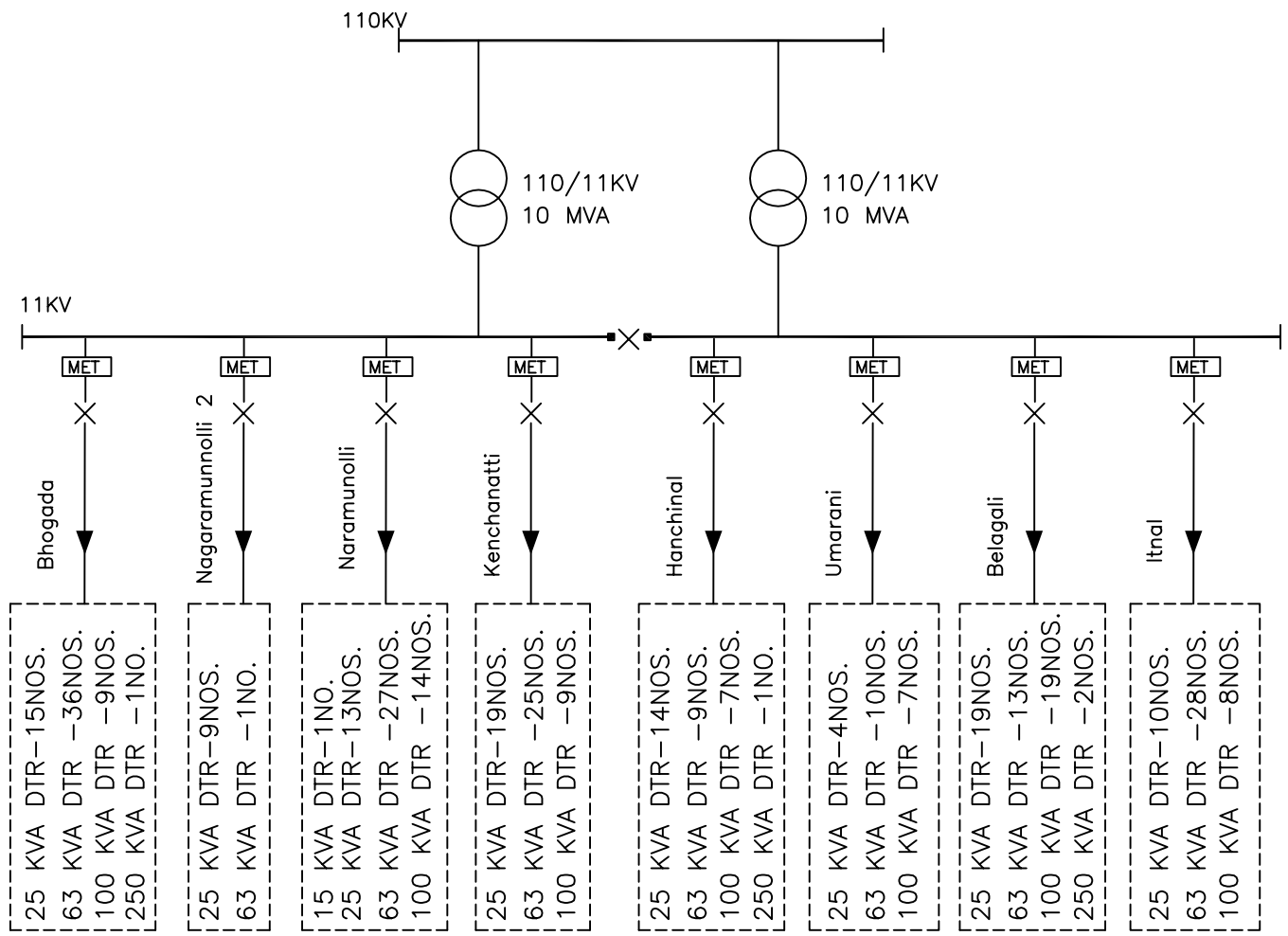

110/33/11KV CHIKODI

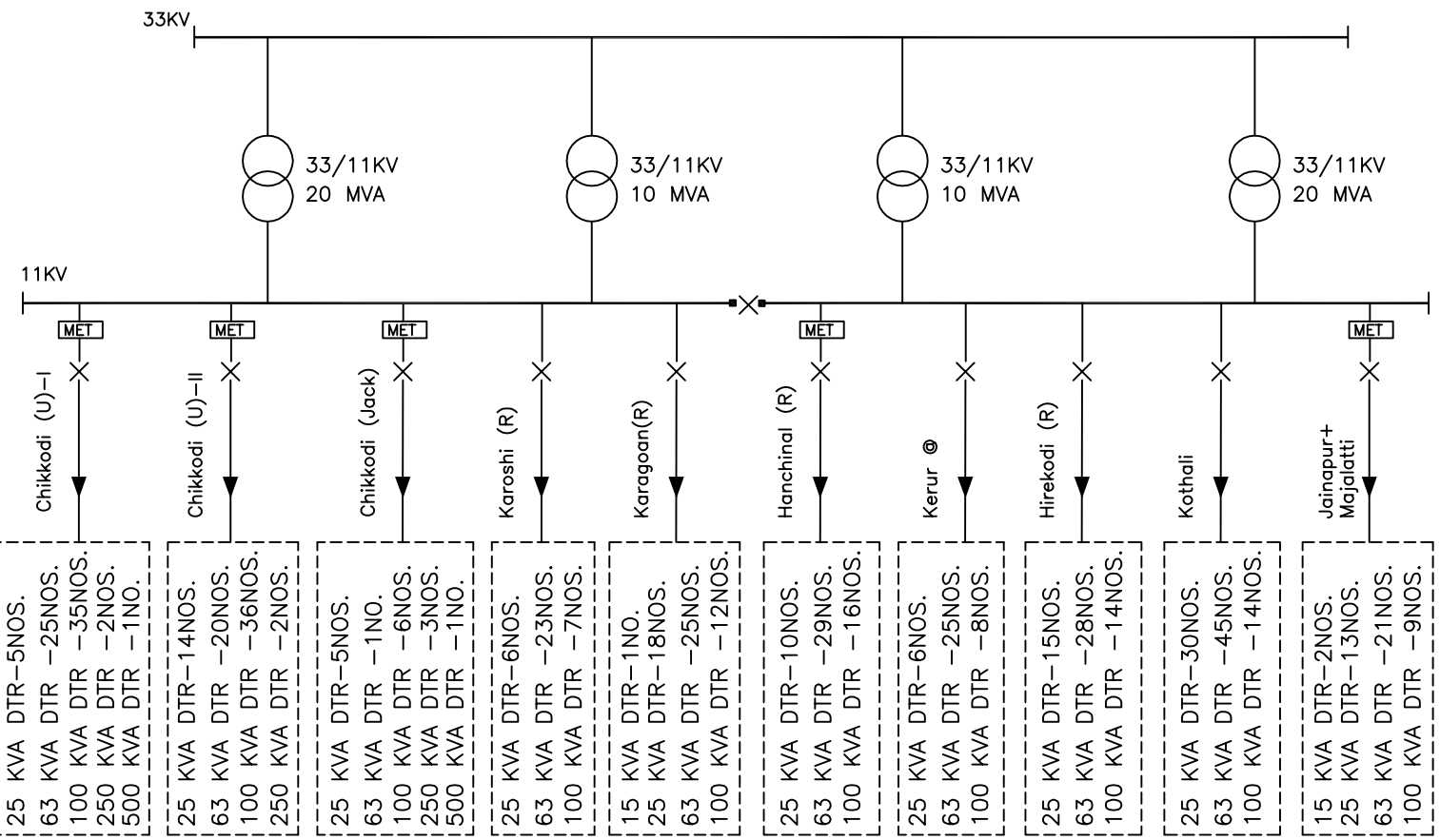

POWER FINANCE CORPORATION. NEW DELHI.

CENTRAL ELECTRICITY REGULATORY COMMISSION. NEW DELHI.

मेकॉन लिमिटेड

MECON LIMITED

NOTE: –

THIS DRAWING PREPARED BASED ON FIRST HAND INFORMATION RECEIVED FROM HESCOM FOR SELECTED CIRCLE AND OUR FIELD VISIT.

REV. NO.	DATE	ZONE	DESCRIPTION	BY	VERIFIED
			REVISIONS		

REV./SEC. — CONCURRED BY

REFERENCES — DRG. NO.

THIS DRAWING IS THE PROPERTY OF MECON AND IS ISSUED FOR THE SPECIFIC PROJECT MENTIONED THEREIN. THIS IS NOT TO BE COPIED OR USED FOR OTHER PROJECTS UNLESS EXPRESSLY PERMITTED BY MECON.

SECTION	ELECTRICAL
LOCATION	KOLKATA
DESIGNED	M.K.JAISWARA
DRAWN	M.K.JAISWARA
CHECKED AND VERIFIED	ROBIN DAS
APPROVED	PRADIP ROY

ASSESMENT OF COMPONENT WISE AT&C LOSS FOR KARNATAKA STATE..

SUB-STATION SINLE LINE DIAGRAM WITH 11KV FEEDER DETAILS FOR CHIKODI DIVISION UNDER CHIKODI CIRCLE.

SCALE – N.T.S.

DRG.NO.MEC/19.56/Q707/CKD/ID/003

SHEET 1 OF 7 — REV. 0

CHIKODI DIVISION

110/11KV NIPPANI

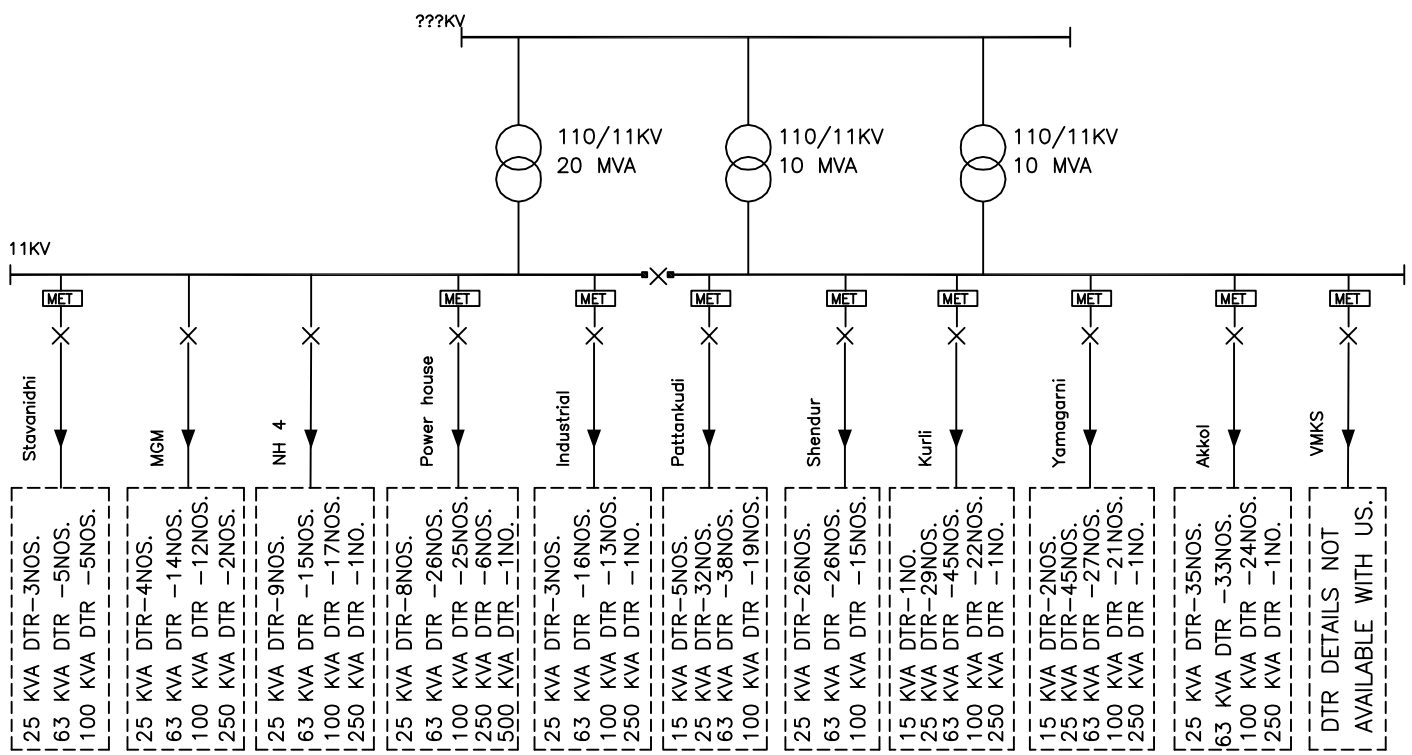

110/33/11KV SADALGA

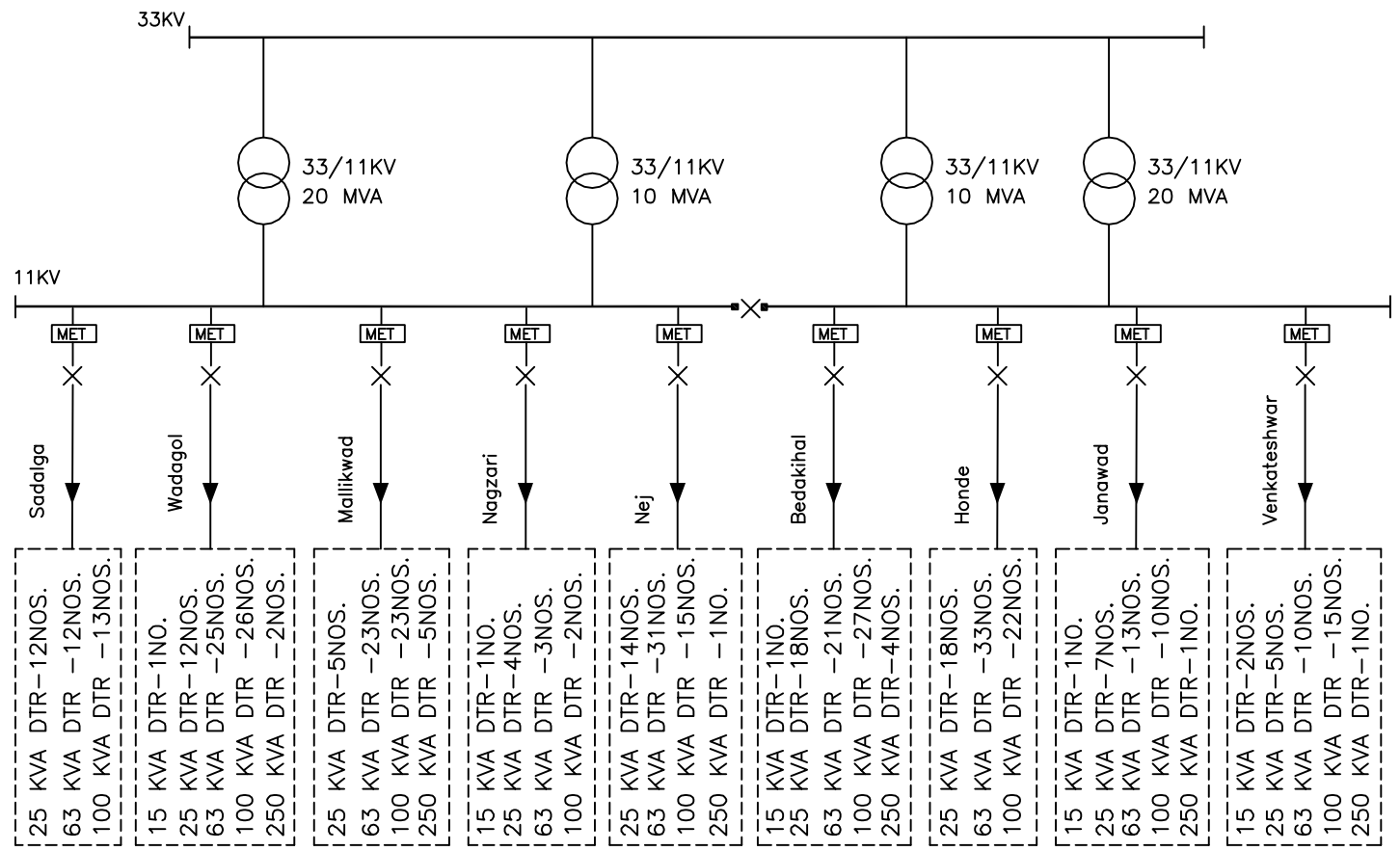

POWER FINANCE CORPORATION. NEW DELHI.

CENTRAL ELECTRICITY REGULATORY COMMISSION. NEW DELHI.

मेकॉन लिमिटेड

MECON LIMITED

NOTE: –

THIS DRAWING PREPARED BASED ON FIRST HAND INFORMATION RECEIVED FROM HESCOM FOR SELECTED CIRCLE AND OUR FIELD VISIT.

REV. NO.	DATE	ZONE	DESCRIPTION	BY	VERIFIED

REVISIONS

REFERENCES | DRG. NO.

THIS DRAWING IS THE PROPERTY OF MECON AND IS ISSUED FOR THE SPECIFIC PROJECT MENTIONED THEREIN. THIS IS NOT TO BE COPIED OR USED FOR OTHER PROJECTS UNLESS EXPRESSLY PERMITTED BY MECON.

SECTION	ELECTRICAL
LOCATION	KOLKATA
DESIGNED	M.K.JAISWARA
DRAWN	M.K.JAISWARA
CHECKED AND VERIFIED	ROBIN DAS
APPROVED	PRADIP ROY

ASSESMENT OF COMPONENT WISE AT&C LOSS FOR KARNATAKA STATE..

SUB-STATION SINLE LINE DIAGRAM WITH 11KV FEEDER DETAILS FOR CHIKODI DIVISION UNDER CHIKODI CIRCLE.

SCALE – N.T.S. | SHEET 2 OF 7 | REV. 0

DRG.NO.MEC/19.56/Q707/CKD/ID/003

REV./SEC. | CONCURRED BY

DRG.NO.MEC/19.56/Q707/CKD/ID/003

CHIKODI DIVISION

110/33/11KV BORGAON

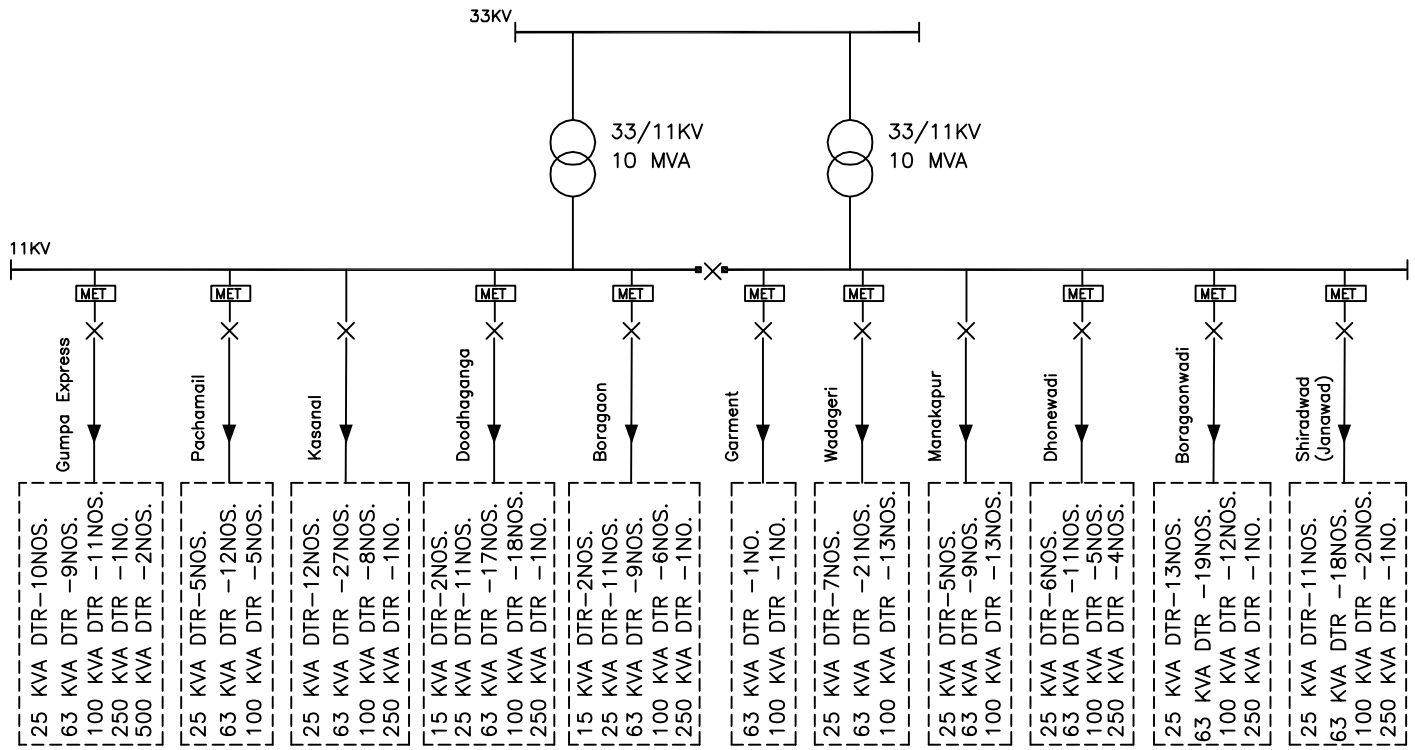

110/11KV GALATAGA

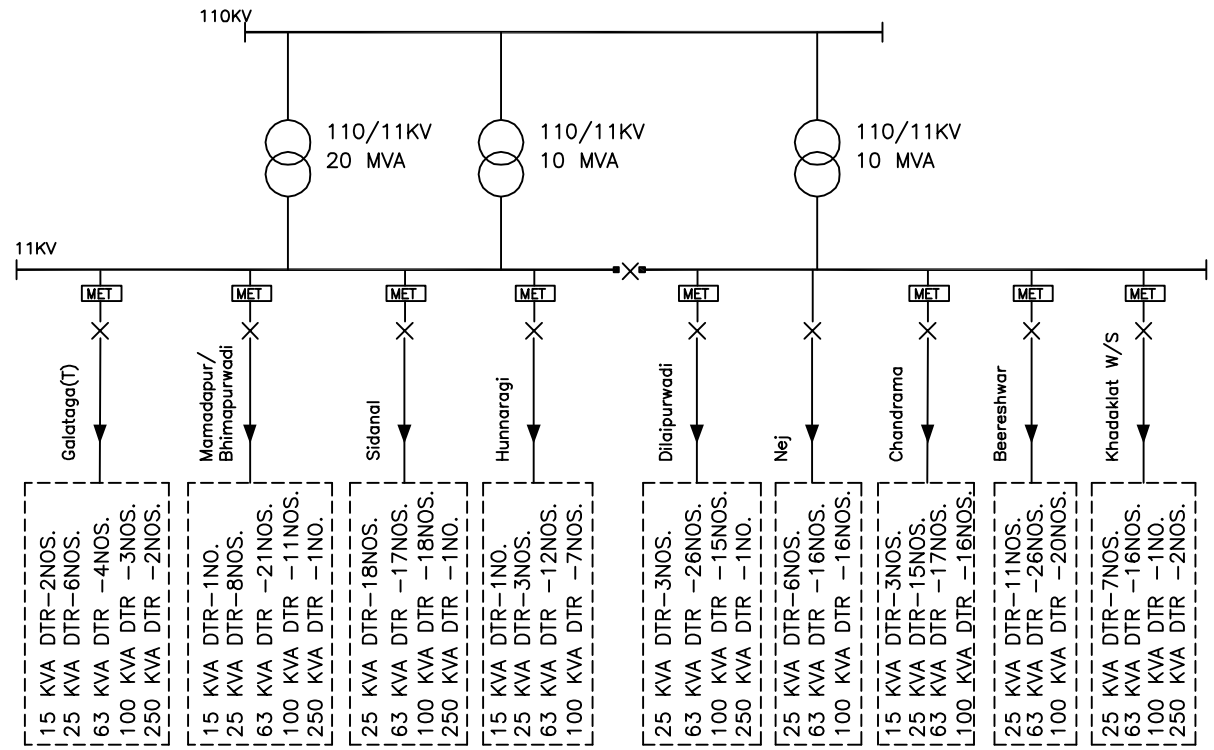

POWER FINANCE CORPORATION. NEW DELHI.

CENTRAL ELECTRICITY REGULATORY COMMISSION. NEW DELHI.

मेकॉन लिमिटेड

MECON LIMITED

NOTE: –

THIS DRAWING PREPARED BASED ON FIRST HAND INFORMATION RECEIVED FROM HESCOM FOR SELECTED CIRCLE AND OUR FIELD VISIT.

REV. NO.	DATE	ZONE	DESCRIPTION	BY	VERIFIED

REVISIONS

REFERENCES | DRG. NO.

THIS DRAWING IS THE PROPERTY OF MECON AND IS ISSUED FOR THE SPECIFIC PROJECT MENTIONED THEREIN. THIS IS NOT TO BE COPIED OR USED FOR OTHER PROJECTS UNLESS EXPRESSLY PERMITTED BY MECON.

REV./SEC. | CONCURRED BY

SECTION	ELECTRICAL
LOCATION	KOLKATA
DESIGNED	M.K.JAISWARA
DRAWN	M.K.JAISWARA
CHECKED AND VERIFIED	ROBIN DAS
APPROVED	PRADIP ROY

ASSESMENT OF COMPONENT WISE AT&C LOSS FOR KARNATAKA STATE.

SUB-STATION SINLE LINE DIAGRAM WITH 11KV FEEDER DETAILS FOR CHIKODI DIVISION UNDER CHIKODI CIRCLE.

SCALE – N.T.S.

DRG.NO.MEC/19.56/Q707/CKD/ID/003

SHEET 3 OF 7 | REV. 0

DRG.NO.MEC/19.56/Q707/CKD/ID/003

CHIKODI DIVISION

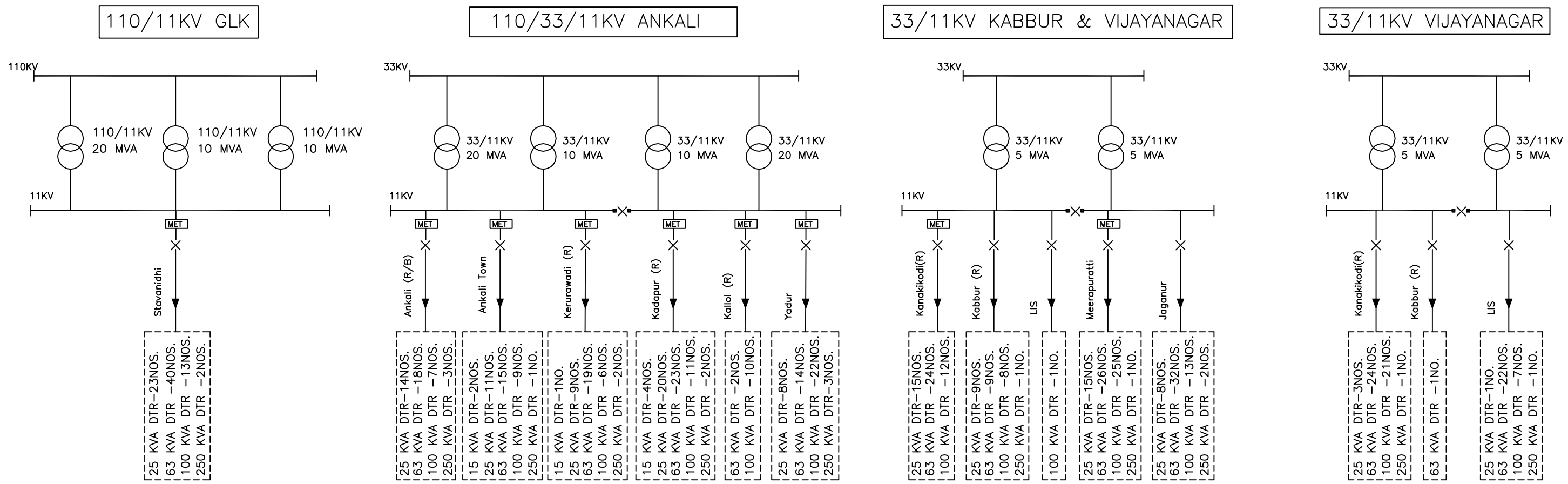

POWER FINANCE CORPORATION. NEW DELHI.

CENTRAL ELECTRICITY REGULATORY COMMISSION. NEW DELHI.

मेकॉन लिमिटेड

MECON LIMITED

NOTE: –

THIS DRAWING PREPARED BASED ON FIRST HAND INFORMATION RECEIVED FROM HESCOM FOR SELECTED CIRCLE AND OUR FIELD VISIT.

REV. NO.	DATE	ZONE	DESCRIPTION	BY	VERIFIED

REVISIONS

REFERENCES | DRG. NO.

THIS DRAWING IS THE PROPERTY OF MECON AND IS ISSUED FOR THE SPECIFIC PROJECT MENTIONED THEREIN. THIS IS NOT TO BE COPIED OR USED FOR OTHER PROJECTS UNLESS EXPRESSLY PERMITTED BY MECON.

REV./SEC. | CONCURRED BY

SECTION	ELECTRICAL
LOCATION	KOLKATA
DESIGNED	M.K.JAISWARA
DRAWN	M.K.JAISWARA
CHECKED AND VERIFIED	ROBIN DAS
APPROVED	PRADIP ROY

ASSESMENT OF COMPONENT WISE AT&C LOSS FOR KARNATAKA STATE..

SUB-STATION SINLE LINE DIAGRAM WITH 11KV FEEDER DETAILS FOR CHIKODI DIVISION UNDER CHIKODI CIRCLE.

SCALE – N.T.S.

DRG.NO.MEC/19.56/Q707/CKD/ID/003

SHEET 4 OF 7 | REV. 0

DRG.NO.MEC/19.56/Q707/CKD/ID/003

CHIKODI DIVISION

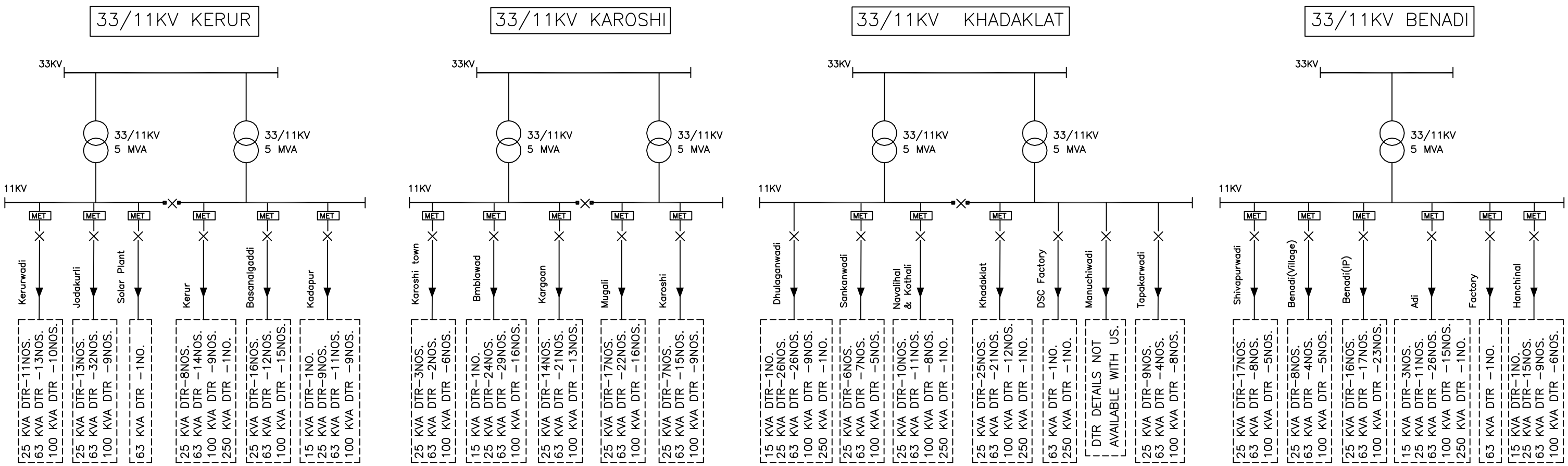

POWER FINANCE CORPORATION. NEW DELHI.

CENTRAL ELECTRICITY REGULATORY COMMISSION. NEW DELHI.

मेकॉन लिमिटेड

MECON LIMITED

NOTE: –

THIS DRAWING PREPARED BASED ON FIRST HAND INFORMATION RECEIVED FROM HESCOM FOR SELECTED CIRCLE AND OUR FIELD VISIT.

REV. NO.	DATE	ZONE	DESCRIPTION	BY	VERIFIED

REVISIONS

REV./SEC. — CONCURRED BY

REFERENCES	DRG. NO.

THIS DRAWING IS THE PROPERTY OF MECON AND IS ISSUED FOR THE SPECIFIC PROJECT MENTIONED THEREIN. THIS IS NOT TO BE COPIED OR USED FOR OTHER PROJECTS UNLESS EXPRESSLY PERMITTED BY MECON.

SECTION	ELECTRICAL
LOCATION	KOLKATA
DESIGNED	M.K.JAISWARA
DRAWN	M.K.JAISWARA
CHECKED AND VERIFIED	ROBIN DAS
APPROVED	PRADIP ROY

ASSESMENT OF COMPONENT WISE AT&C LOSS FOR KARNATAKA STATE..

SUB-STATION SINLE LINE DIAGRAM WITH 11KV FEEDER DETAILS FOR CHIKODI DIVISION UNDER CHIKODI CIRCLE.

SCALE – N.T.S.

DRG.NO.MEC/19.56/Q707/CKD/ID/003

SHEET 5 OF 7 REV. 0

DRG.NO.MEC/19.56/Q707/CKD/ID/003

CHIKODI DIVISION

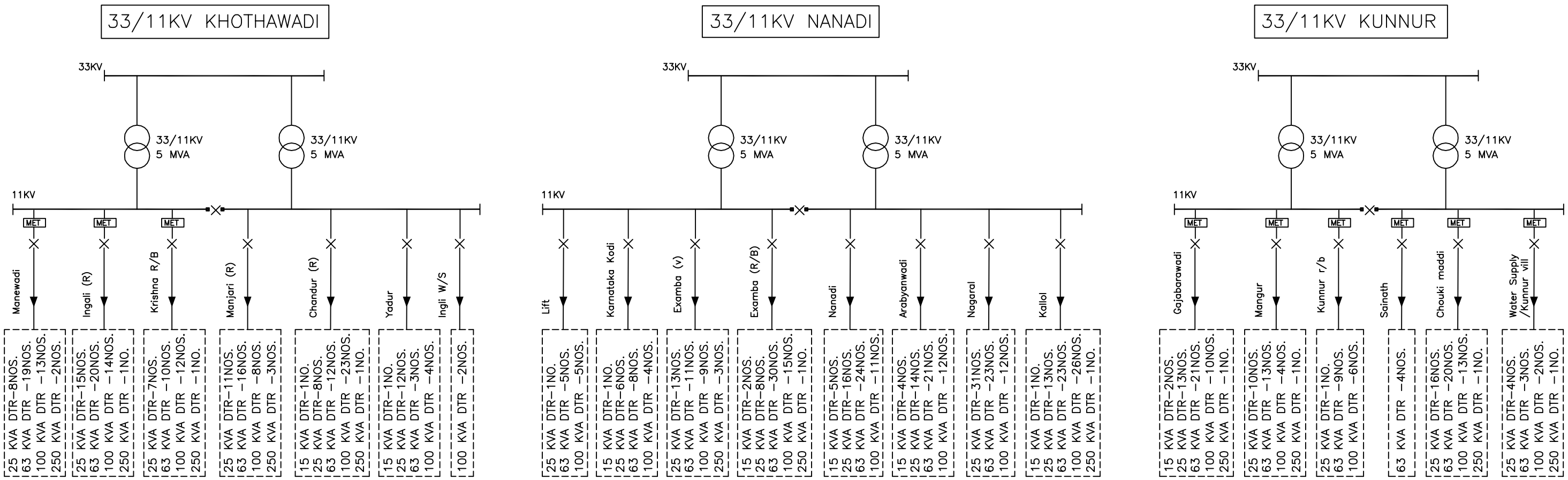

POWER FINANCE CORPORATION. NEW DELHI.

CENTRAL ELECTRICITY REGULATORY COMMISSION. NEW DELHI.

मेकॉन लिमिटेड

MECON LIMITED

NOTE: –

THIS DRAWING PREPARED BASED ON FIRST HAND INFORMATION RECEIVED FROM HESCOM FOR SELECTED CIRCLE AND OUR FIELD VISIT.

REV. NO.	DATE	ZONE	DESCRIPTION	BY	VERIFIED

REVISIONS

REFERENCES | DRG. NO.

THIS DRAWING IS THE PROPERTY OF MECON AND IS ISSUED FOR THE SPECIFIC PROJECT MENTIONED THEREIN. THIS IS NOT TO BE COPIED OR USED FOR OTHER PROJECTS UNLESS EXPRESSLY PERMITTED BY MECON.

SECTION	ELECTRICAL
LOCATION	KOLKATA
DESIGNED	M.K.JAISWARA
DRAWN	M.K.JAISWARA
CHECKED AND VERIFIED	ROBIN DAS
APPROVED	PRADIP ROY

ASSESMENT OF COMPONENT WISE AT&C LOSS FOR KARNATAKA STATE..

SUB-STATION SINLE LINE DIAGRAM WITH 11KV FEEDER DETAILS FOR CHIKODI DIVISION UNDER CHIKODI CIRCLE.

SCALE – N.T.S.

DRG.NO.MEC/19.56/Q707/CKD/ID/003

SHEET 6 OF 7

REV. 0

CONCURRED BY

REV./SEC.

DRG.NO.MEC/19.56/Q707/CKD/ID/003

CHIKODI DIVISION

33/11KV BHOJ

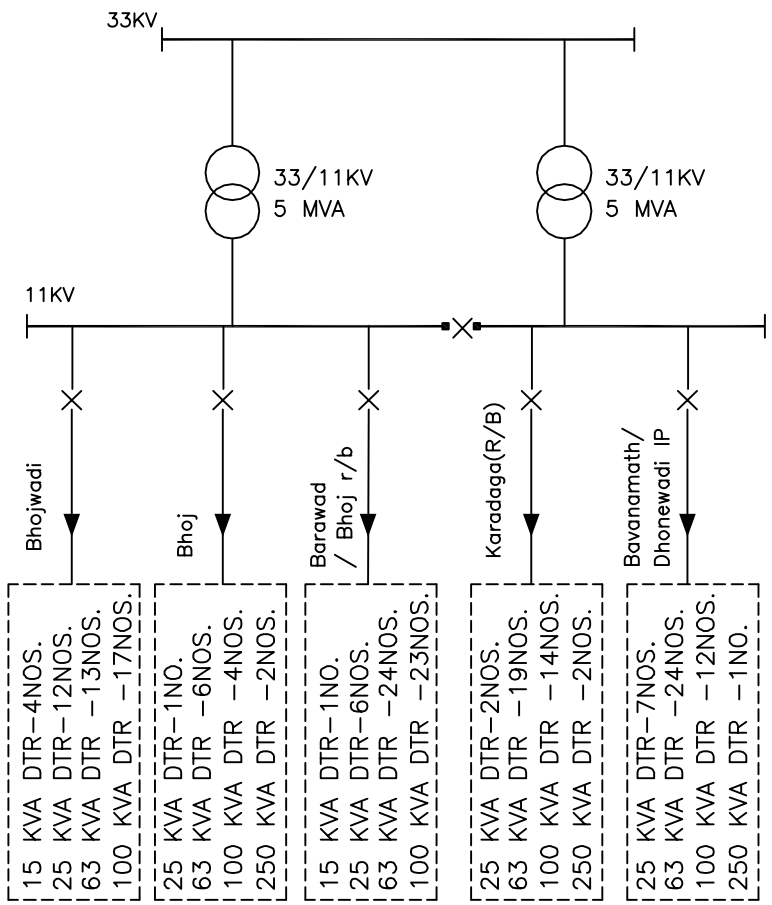

33/11KV KOGANOLLI

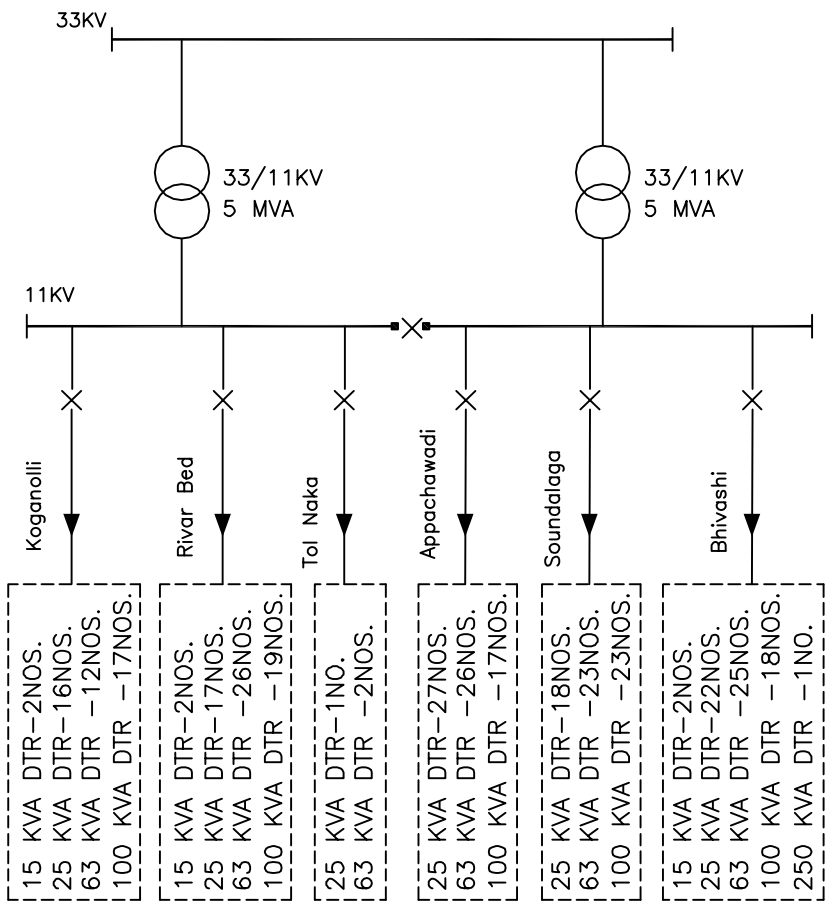

POWER FINANCE CORPORATION. NEW DELHI.

CENTRAL ELECTRICITY REGULATORY COMMISSION. NEW DELHI.

मेकॉन लिमिटेड

MECON LIMITED

NOTE: –

THIS DRAWING PREPARED BASED ON FIRST HAND INFORMATION RECEIVED FROM HESCOM FOR SELECTED CIRCLE AND OUR FIELD VISIT.

REV. NO.	DATE	ZONE	DESCRIPTION	BY	VERIFIED

REVISIONS

REFERENCES | DRG. NO.

THIS DRAWING IS THE PROPERTY OF MECON AND IS ISSUED FOR THE SPECIFIC PROJECT MENTIONED THEREIN. THIS IS NOT TO BE COPIED OR USED FOR OTHER PROJECTS UNLESS EXPRESSLY PERMITTED BY MECON.

SECTION	ELECTRICAL
LOCATION	KOLKATA
DESIGNED	M.K.JAISWARA
DRAWN	M.K.JAISWARA
CHECKED AND VERIFIED	ROBIN DAS
APPROVED	PRADIP ROY

ASSESMENT OF COMPONENT WISE AT&C LOSS FOR KARNATAKA STATE..

SUB-STATION SINLE LINE DIAGRAM WITH 11KV FEEDER DETAILS FOR CHIKODI DIVISION UNDER CHIKODI CIRCLE.

SCALE – N.T.S.

DRG.NO.MEC/19.56/Q707/CKD/ID/003

SHEET 7 OF 7

REV. 0

CONCURRED BY

REV./SEC.

DRAWING DESCRIPTION : SUB-STATION SLD WITH 11KV FEEDER DETAILS FOR ATHANI DIVISION UNDER CHIKODI CIRCLE.

DRAWING NO. : MEC/19.56/Q707/CKD/ID/004

NO. OF SHEETS : 06

DRG.NO.MEC/19.56/Q707/CKD/ID/004

ATHANI DIVISION

110/11KV AINAPUR

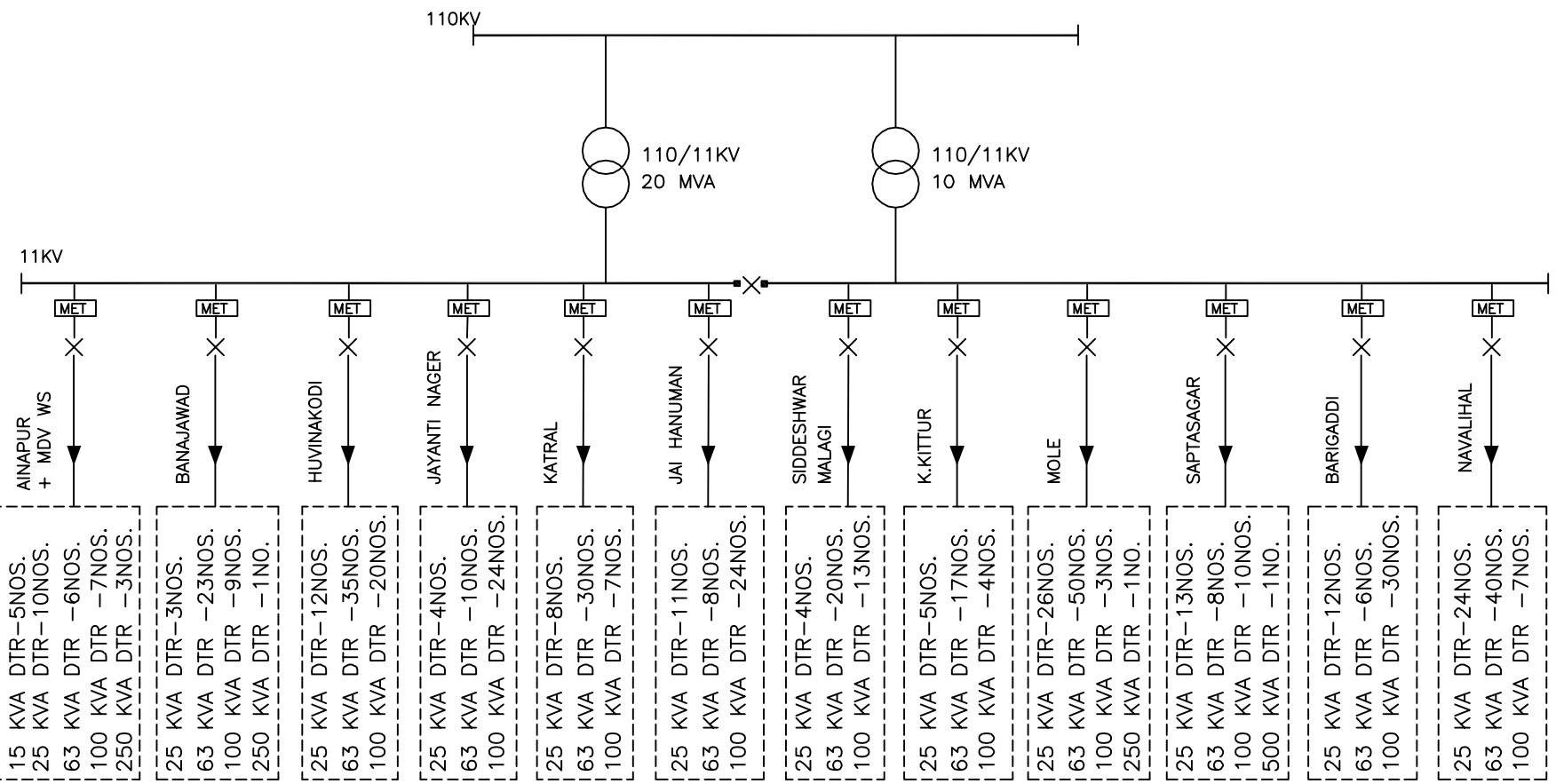

110/33/11KV UGAR

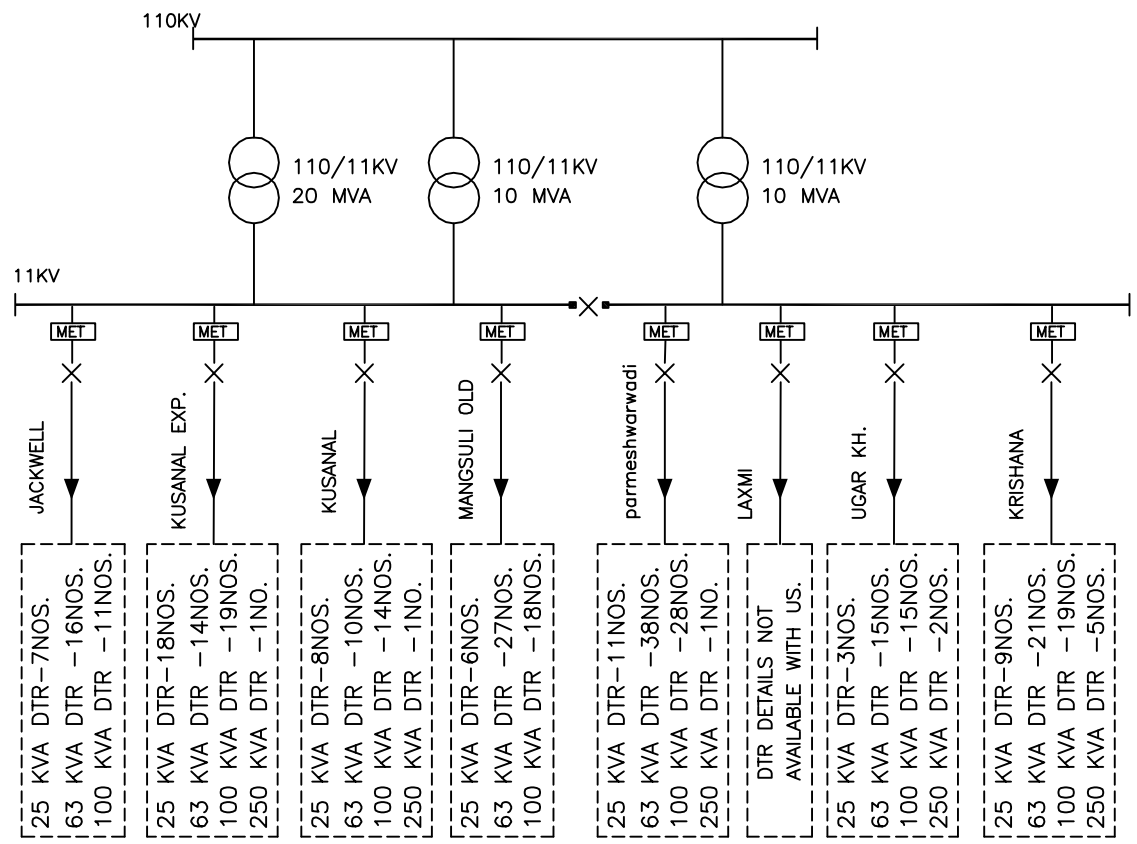

POWER FINANCE CORPORATION. NEW DELHI.

CENTRAL ELECTRICITY REGULATORY COMMISSION. NEW DELHI.

मेकॉन लिमिटेड

MECON LIMITED

NOTE: –

THIS DRAWING PREPARED BASED ON FIRST HAND INFORMATION RECEIVED FROM HESCOM FOR SELECTED CIRCLE AND OUR FIELD VISIT.

REV. NO.	DATE	ZONE	DESCRIPTION	BY	VERIFIED

REVISIONS

CONCURRED BY

REFERENCES | DRG. NO.

THIS DRAWING IS THE PROPERTY OF MECON AND IS ISSUED FOR THE SPECIFIC PROJECT MENTIONED THEREIN. THIS IS NOT TO BE COPIED OR USED FOR OTHER PROJECTS UNLESS EXPRESSLY PERMITTED BY MECON.

SECTION	ELECTRICAL
LOCATION	KOLKATA
DESIGNED	M.K.JAISWARA
DRAWN	M.K.JAISWARA
CHECKED AND VERIFIED	ROBIN DAS
APPROVED	PRADIP ROY

ASSESMENT OF COMPONENT WISE AT&C LOSS FOR KARNATAKA STATE..

SUB-STATION SINLE LINE DIAGRAM WITH 11KV FEEDER DETAILS FOR ATHANI DIVISION UNDER CHIKODI CIRCLE.

SCALE – N.T.S.

DRG.NO.MEC/19.56/Q707/CKD/ID/004

SHEET 1 OF 6

REV. 0

DRG.NO.MEC/19.56/Q707/CKD/ID/004

ATHANI DIVISION

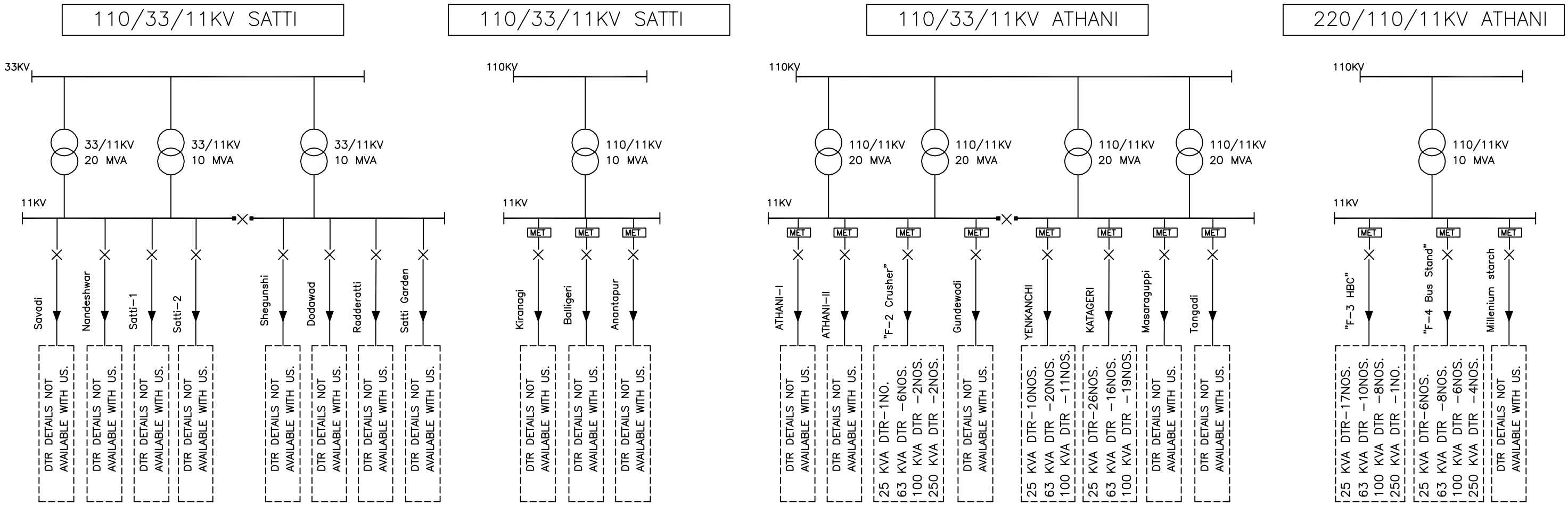

POWER FINANCE CORPORATION. NEW DELHI.

CENTRAL ELECTRICITY REGULATORY COMMISSION. NEW DELHI.

मेकॉन लिमिटेड

MECON LIMITED

NOTE: –

THIS DRAWING PREPARED BASED ON FIRST HAND INFORMATION RECEIVED FROM HESCOM FOR SELECTED CIRCLE AND OUR FIELD VISIT.

REV. NO.	DATE	ZONE	DESCRIPTION	BY	VERIFIED

REVISIONS

REFERENCES	DRG. NO.

THIS DRAWING IS THE PROPERTY OF MECON AND IS ISSUED FOR THE SPECIFIC PROJECT MENTIONED THEREIN. THIS IS NOT TO BE COPIED OR USED FOR OTHER PROJECTS UNLESS EXPRESSLY PERMITTED BY MECON.

SECTION	ELECTRICAL
LOCATION	KOLKATA
DESIGNED	M.K.JAISWARA
DRAWN	M.K.JAISWARA
CHECKED AND VERIFIED	ROBIN DAS
APPROVED	PRADIP ROY

ASSESMENT OF COMPONENT WISE AT&C LOSS FOR KARNATAKA STATE..

SUB-STATION SINLE LINE DIAGRAM WITH 11KV FEEDER DETAILS FOR ATHANI DIVISION UNDER CHIKODI CIRCLE.

SCALE – N.T.S.

DRG.NO.MEC/19.56/Q707/CKD/ID/004

SHEET 2 OF 6

REV. 0

REV./SEC. CONCURRED BY

DRG.NO.MEC/19.56/Q707/CKD/ID/004

ATHANI DIVISION

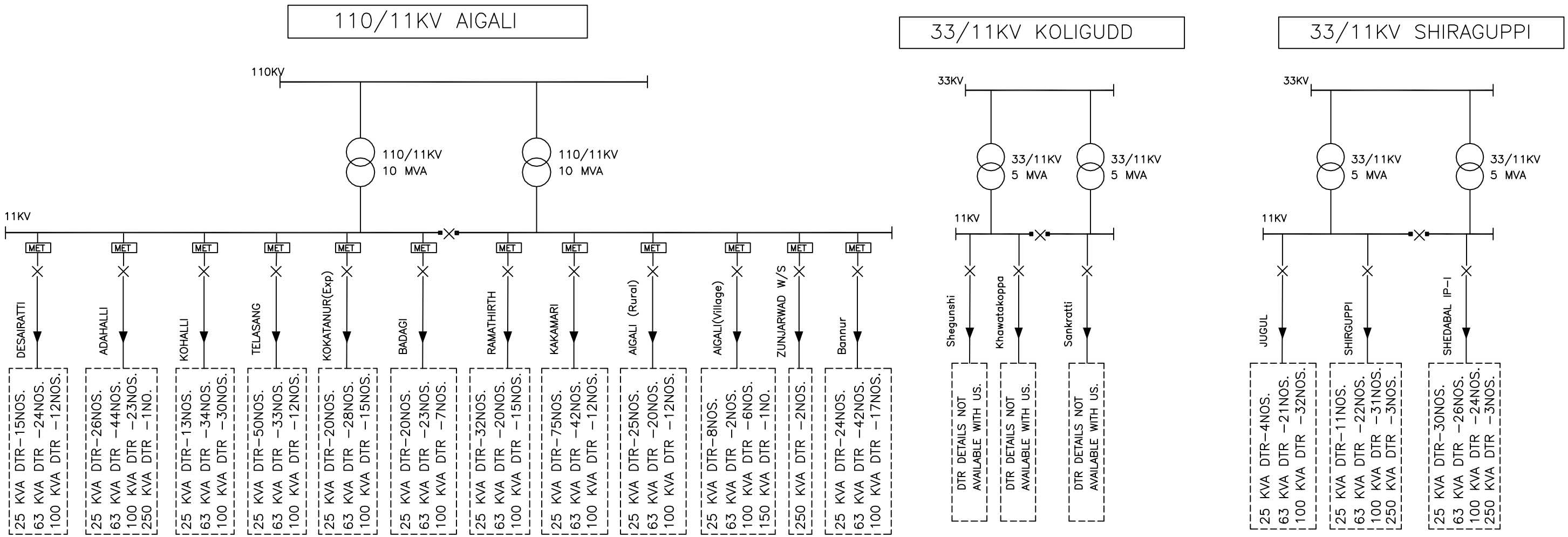

POWER FINANCE CORPORATION. NEW DELHI.

CENTRAL ELECTRICITY REGULATORY COMMISSION. NEW DELHI.

मेकॉन लिमिटेड

MECON LIMITED

NOTE: –

THIS DRAWING PREPARED BASED ON FIRST HAND INFORMATION RECEIVED FROM HESCOM FOR SELECTED CIRCLE AND OUR FIELD VISIT.

REV. NO.	DATE	ZONE	DESCRIPTION	BY	VERIFIED

REVISIONS

CONCURRED BY

REFERENCES | DRG. NO.

THIS DRAWING IS THE PROPERTY OF MECON AND IS ISSUED FOR THE SPECIFIC PROJECT MENTIONED THEREIN. THIS IS NOT TO BE COPIED OR USED FOR OTHER PROJECTS UNLESS EXPRESSLY PERMITTED BY MECON.

SECTION	ELECTRICAL
LOCATION	KOLKATA
DESIGNED	M.K.JAISWARA
DRAWN	M.K.JAISWARA
CHECKED AND VERIFIED	ROBIN DAS
APPROVED	PRADIP ROY

ASSESMENT OF COMPONENT WISE AT&C LOSS FOR KARNATAKA STATE..

SUB-STATION SINLE LINE DIAGRAM WITH 11KV FEEDER DETAILS FOR ATHANI DIVISION UNDER CHIKODI CIRCLE.

SCALE – N.T.S.

DRG.NO.MEC/19.56/Q707/CKD/ID/004

SHEET 3 OF 6

REV. 0

DRG.NO.MEC/19.56/Q707/CKD/ID/004

ATHANI DIVISION

33/11KV MANGASULI

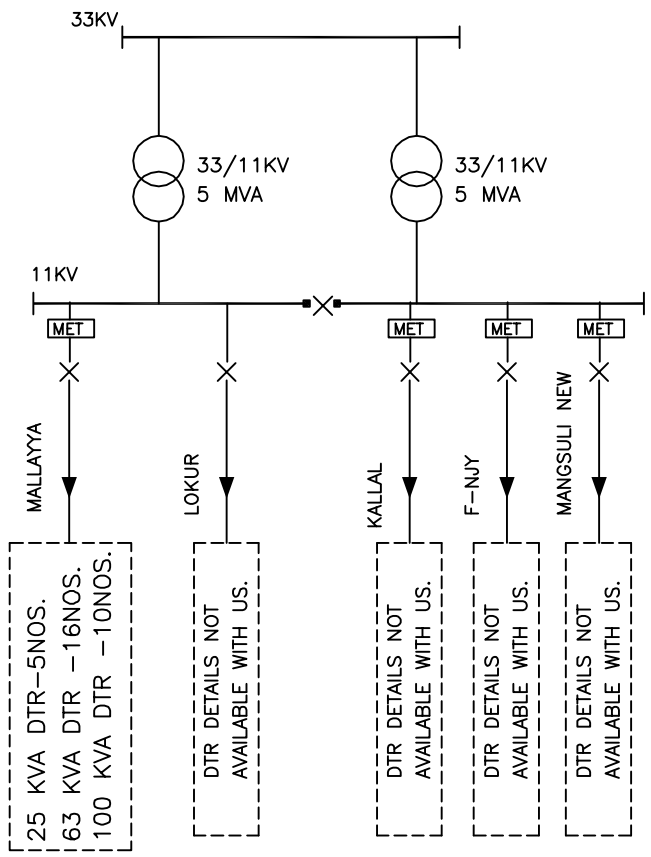

33/11KV KAGWAD

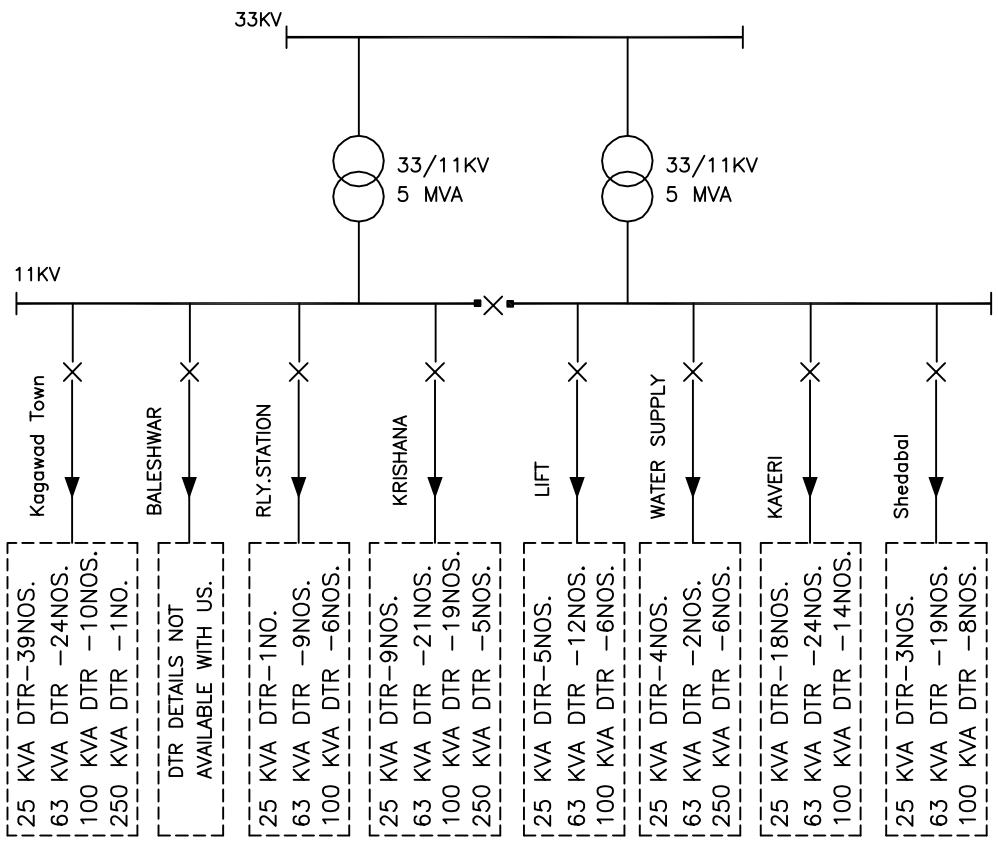

33/11KV SHEDBAL

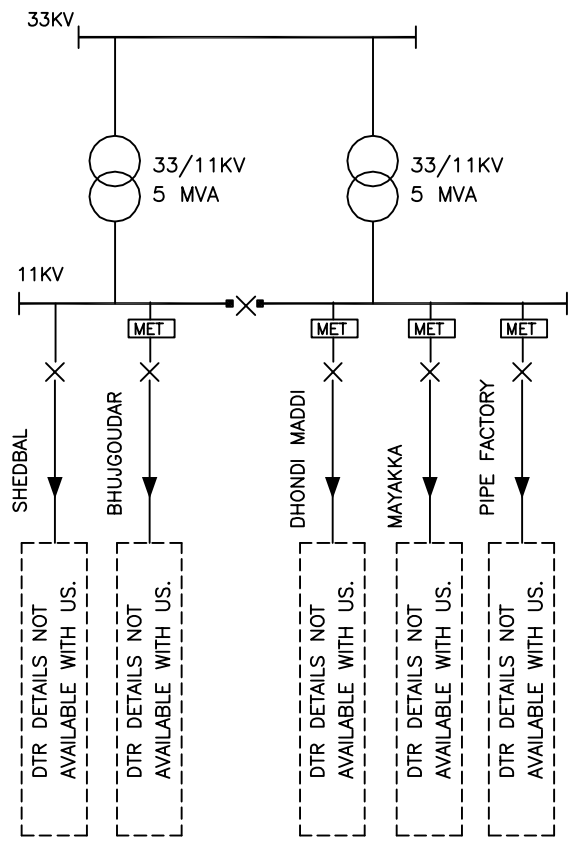

POWER FINANCE CORPORATION. NEW DELHI.

CENTRAL ELECTRICITY REGULATORY COMMISSION. NEW DELHI.

मेकॉन लिमिटेड

MECON LIMITED

NOTE: –

THIS DRAWING PREPARED BASED ON FIRST HAND INFORMATION RECEIVED FROM HESCOM FOR SELECTED CIRCLE AND OUR FIELD VISIT.

REV. NO.	DATE	ZONE	DESCRIPTION	BY	VERIFIED

REVISIONS

REFERENCES	DRG. NO.

THIS DRAWING IS THE PROPERTY OF MECON AND IS ISSUED FOR THE SPECIFIC PROJECT MENTIONED THEREIN. THIS IS NOT TO BE COPIED OR USED FOR OTHER PROJECTS UNLESS EXPRESSLY PERMITTED BY MECON.

SECTION	ELECTRICAL
LOCATION	KOLKATA
DESIGNED	M.K.JAISWARA
DRAWN	M.K.JAISWARA
CHECKED AND VERIFIED	ROBIN DAS
APPROVED	PRADIP ROY

ASSESMENT OF COMPONENT WISE AT&C LOSS FOR KARNATAKA STATE..

SUB-STATION SINLE LINE DIAGRAM WITH 11KV FEEDER DETAILS FOR ATHANI DIVISION UNDER CHIKODI CIRCLE.

SCALE – N.T.S.

DRG.NO.MEC/19.56/Q707/CKD/ID/004

SHEET 4 OF 6

REV. 0

REV./SEC. CONCURRED BY

DRG.NO.MEC/19.56/Q707/CKD/ID/004

ATHANI DIVISION

33/11KV NANDAGAV

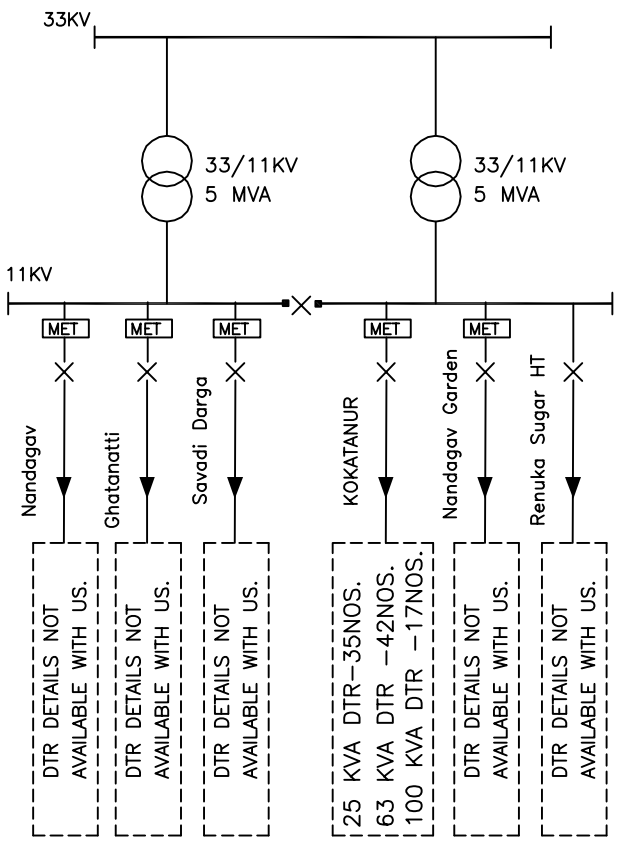

33/11KV SHIRAHATTI

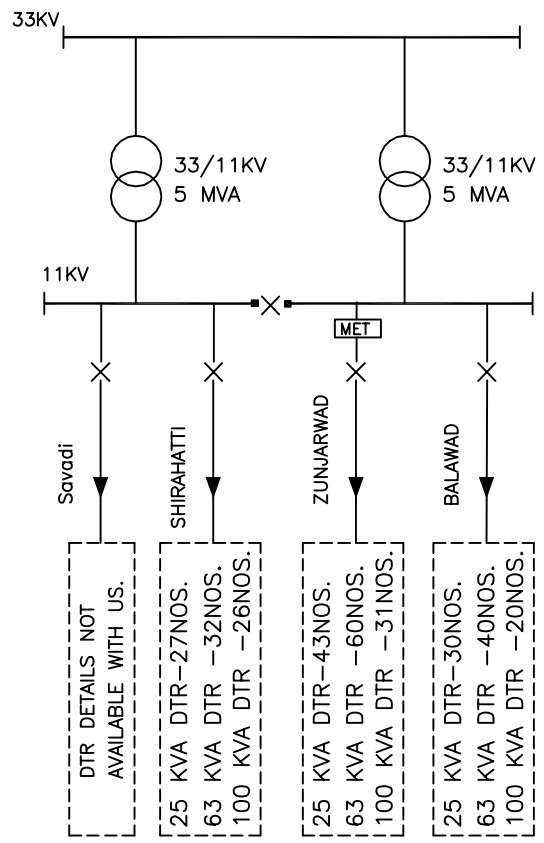

33/11KV MURAGUNDI

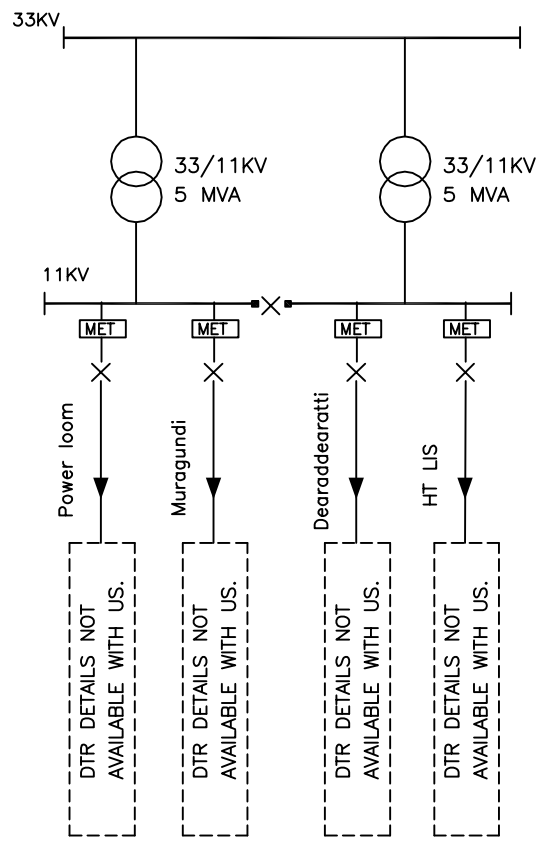

33/11KV HALYAL

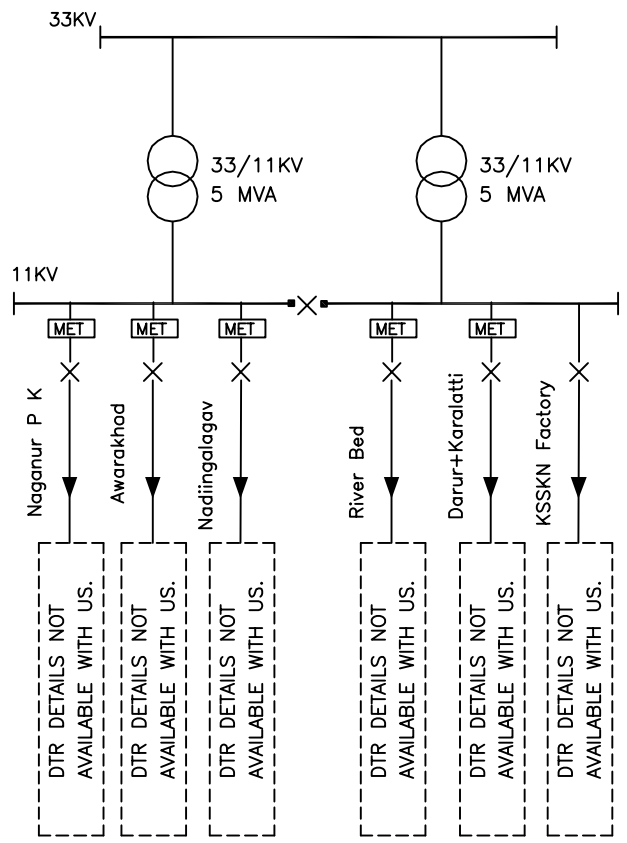

POWER FINANCE CORPORATION. NEW DELHI.

CENTRAL ELECTRICITY REGULATORY COMMISSION. NEW DELHI.

मेकॉन लिमिटेड

MECON LIMITED

NOTE: –

THIS DRAWING PREPARED BASED ON FIRST HAND INFORMATION RECEIVED FROM HESCOM FOR SELECTED CIRCLE AND OUR FIELD VISIT.

REV. NO.	DATE	ZONE	DESCRIPTION	BY	VERIFIED

REVISIONS

REFERENCES | DRG. NO.

THIS DRAWING IS THE PROPERTY OF MECON AND IS ISSUED FOR THE SPECIFIC PROJECT MENTIONED THEREIN. THIS IS NOT TO BE COPIED OR USED FOR OTHER PROJECTS UNLESS EXPRESSLY PERMITTED BY MECON.

SECTION	ELECTRICAL
LOCATION	KOLKATA
DESIGNED	M.K.JAISWARA
DRAWN	M.K.JAISWARA
CHECKED AND VERIFIED	ROBIN DAS
APPROVED	PRADIP ROY

ASSESMENT OF COMPONENT WISE AT&C LOSS FOR KARNATAKA STATE..

SUB-STATION SINLE LINE DIAGRAM WITH 11KV FEEDER DETAILS FOR ATHANI DIVISION UNDER CHIKODI CIRCLE.

SCALE – N.T.S.

DRG.NO.MEC/19.56/Q707/CKD/ID/004

SHEET 5 OF 6

REV. 0

REV./SEC. CONCURRED BY

DRG.NO.MEC/19.56/Q707/CKD/ID/004

ATHANI DIVISION

33/11KV SANKONATTI

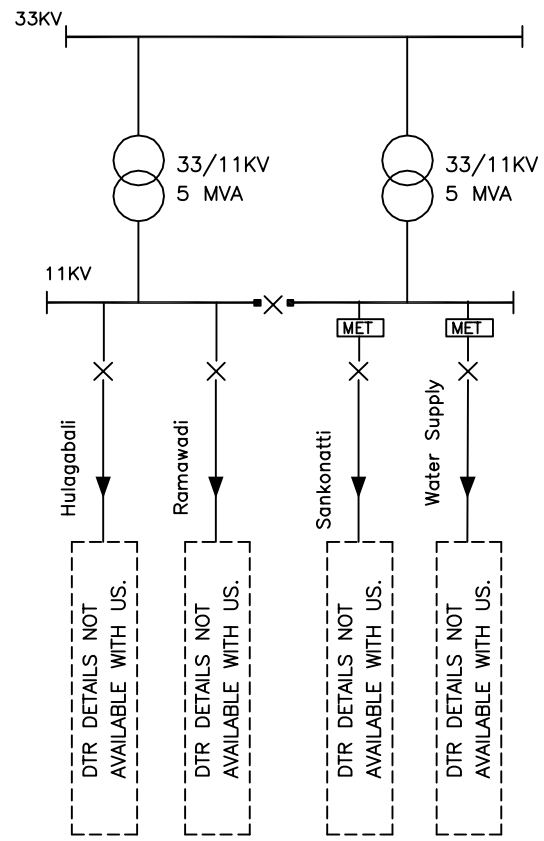

33/11KV JAMBAGI

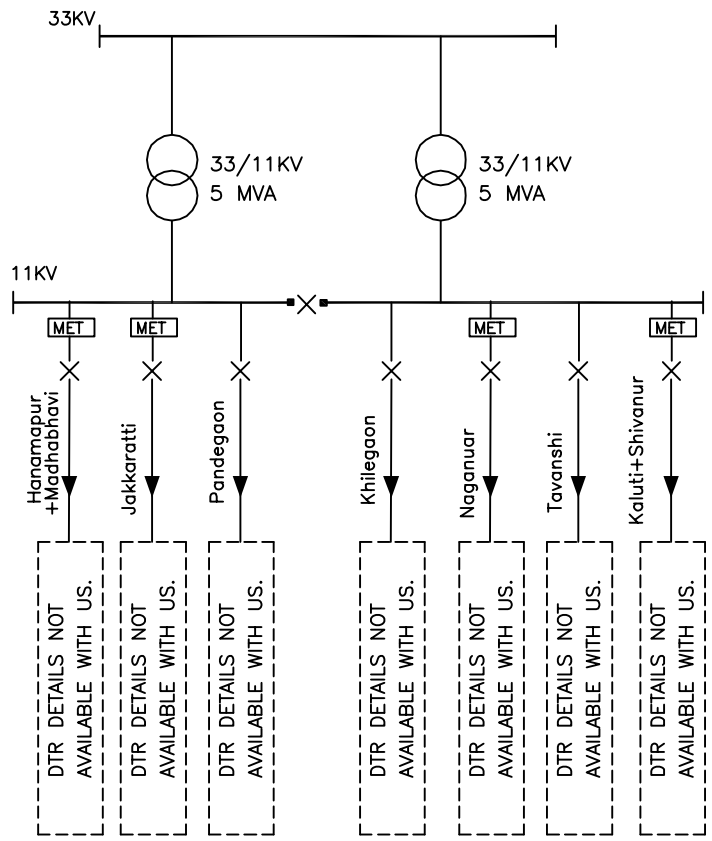

33/11KV SATTI

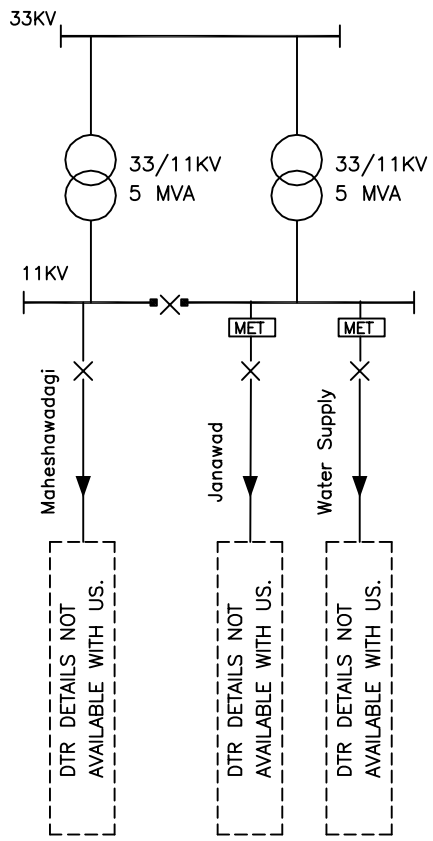

POWER FINANCE CORPORATION. NEW DELHI.

CENTRAL ELECTRICITY REGULATORY COMMISSION. NEW DELHI.

मेकॉन लिमिटेड

MECON LIMITED

NOTE: –

THIS DRAWING PREPARED BASED ON FIRST HAND INFORMATION RECEIVED FROM HESCOM FOR SELECTED CIRCLE AND OUR FIELD VISIT.

REV. NO.	DATE	ZONE	DESCRIPTION	BY	VERIFIED

REVISIONS

REFERENCES	DRG. NO.

THIS DRAWING IS THE PROPERTY OF MECON AND IS ISSUED FOR THE SPECIFIC PROJECT MENTIONED THEREIN. THIS IS NOT TO BE COPIED OR USED FOR OTHER PROJECTS UNLESS EXPRESSLY PERMITTED BY MECON.

SECTION	ELECTRICAL
LOCATION	KOLKATA
DESIGNED	M.K.JAISWARA
DRAWN	M.K.JAISWARA
CHECKED AND VERIFIED	ROBIN DAS
APPROVED	PRADIP ROY

ASSESMENT OF COMPONENT WISE AT&C LOSS FOR KARNATAKA STATE..

SUB–STATION SINLE LINE DIAGRAM WITH 11KV FEEDER DETAILS FOR ATHANI DIVISION UNDER CHIKODI CIRCLE.

SCALE – N.T.S.

DRG.NO.MEC/19.56/Q707/CKD/ID/004

SHEET 6 OF 6

REV. 0

REV./SEC.

CONCURRED BY

DRAWINGS AND DIAGRAMS
OF
GULBARGA CIRCLE

DRAWING DESCRIPTION : 110KV & 33KV POWER INTERCONNECTION DIAGRAM AND 33KV HT CONSUMER DETAILS OF GULBARGA CIRCLE.

DRAWING NO. : MEC/19.56/Q707/GLB/ID/001

NO. OF SHEETS : 01

DRG.NO.MEC/19.56/Q707/GLB/ID/001

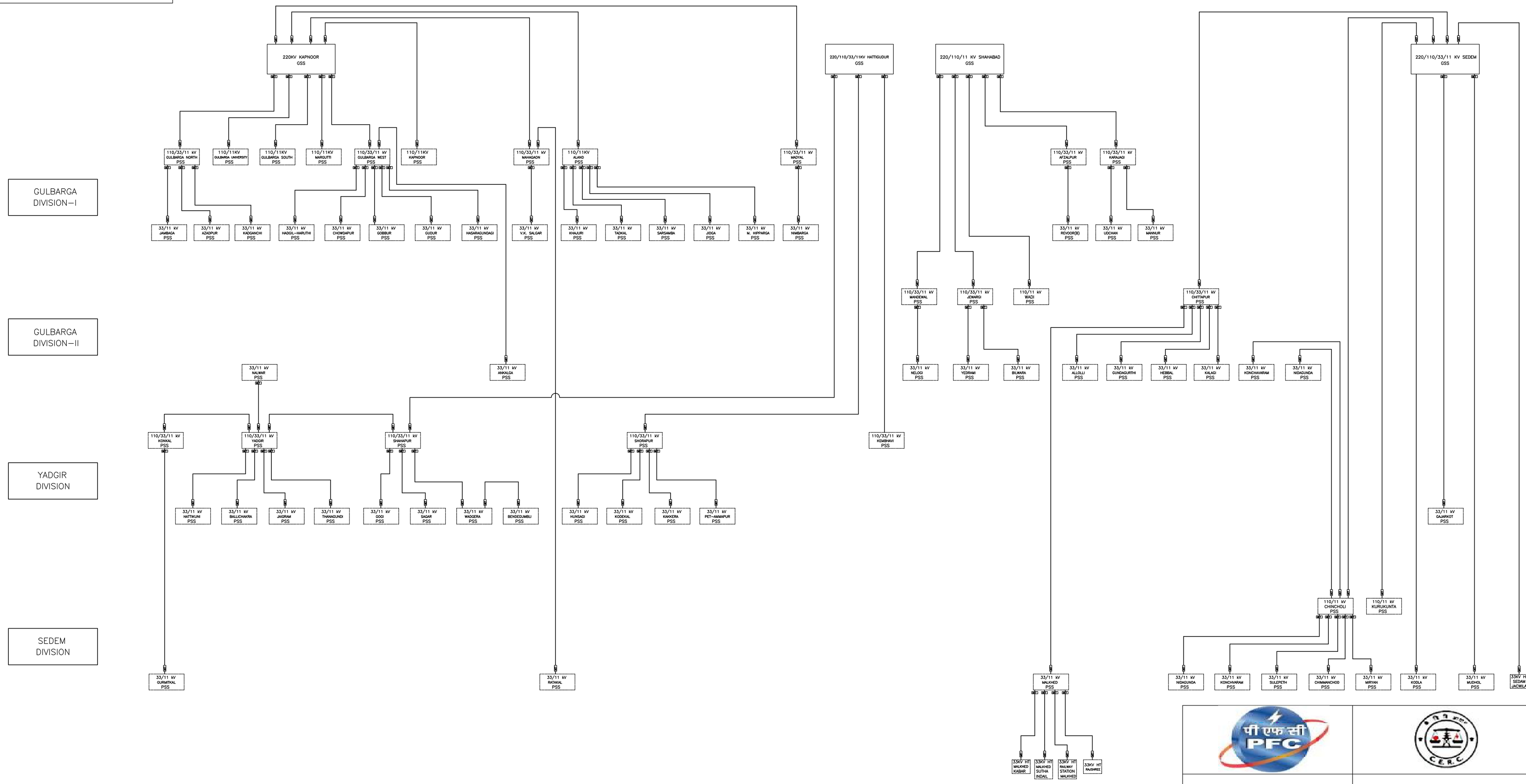

POWER FINANCE CORPORATION. NEW DELHI.

CENTRAL ELECTRICITY REGULATORY COMMISSION. NEW DELHI.

मेकॉन लिमिटेड

MECON LIMITED

ISO 9001 COMPANY

NOTE: –

THIS DRAWING PREPARED BASED ON INFORMATION RECEIVED FROM GESCOM FOR SELECTED CIRCLE AND OUR FIELD VISIT.

REV. NO.	DATE	ZONE	DESCRIPTION	BY	VERIFIED
			REVISIONS		

REFERENCES | DRG. NO.

THIS DRAWING IS THE PROPERTY OF MECON AND IS ISSUED FOR THE SPECIFIC PROJECT MENTIONED THEREIN. THIS IS NOT TO BE COPIED OR USED FOR OTHER PROJECTS UNLESS EXPRESSLY PERMITTED BY MECON.

CONCURRED BY

SECTION	ELECTRICAL
LOCATION	KOLKATA
DESIGNED	M.K.JAISWARA
DRAWN	M.K.JAISWARA
CHECKED AND VERIFIED	ROBIN DAS
APPROVED	PRADIP ROY

ASSESMENT OF COMPONENT WISE AT&C LOSS FOR KARNATAKA STATE

110KV & 33KV POWER INTERCONNECTION DIAGRAM AND 33KV HT CONSUMER DETAILS OF GULBARGA CIRCLE.

SCALE – N.T.S. | SHEET 1 OF 1 | REV. 0

DRG.NO.MEC/19.56/Q707/GLB/ID/001

DRAWING DESCRIPTION : SUB-STATION SLD WITH 11KV FEEDER DETAILS FOR GULBARGA DIVISION-I UNDER GULBARGA CIRCLE.

DRAWING NO. : MEC/19.56/Q707/GLB/ID/002

NO. OF SHEETS : 10

DRG.NO.MEC/19.56/Q707/GLB/ID/002

GULBARGA DIVISION–I

110KV MADYAL

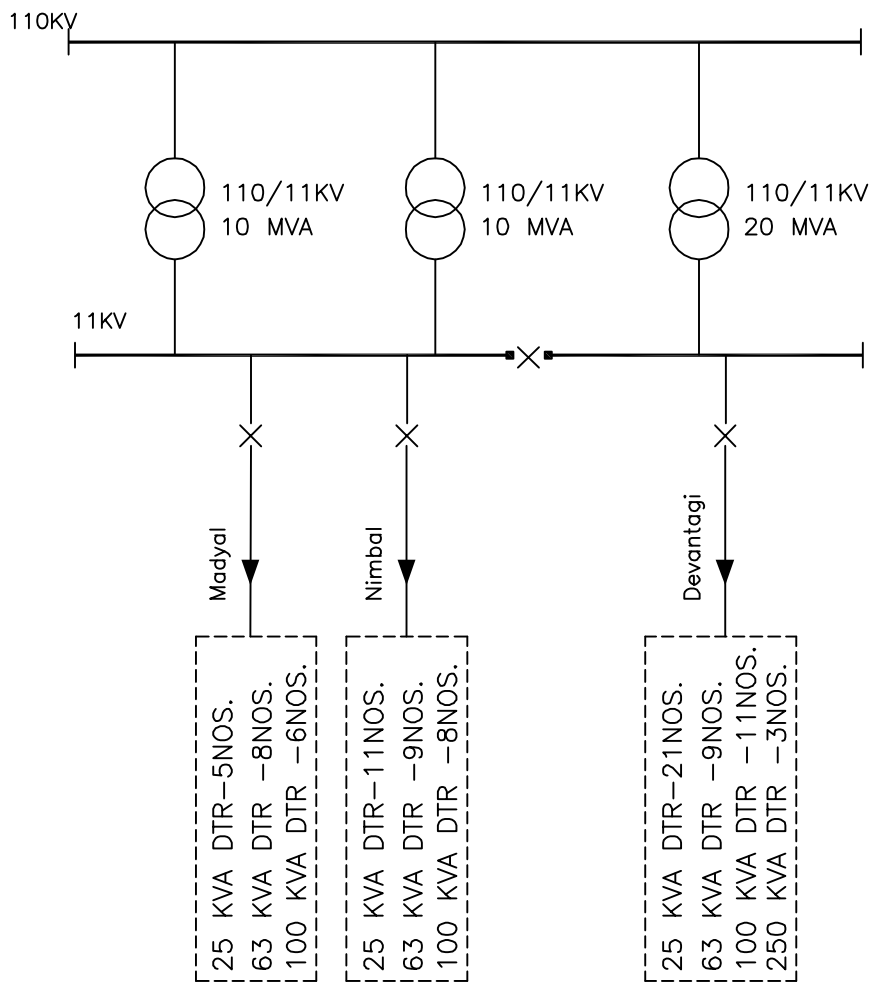

110/11 KV MARGUTTI

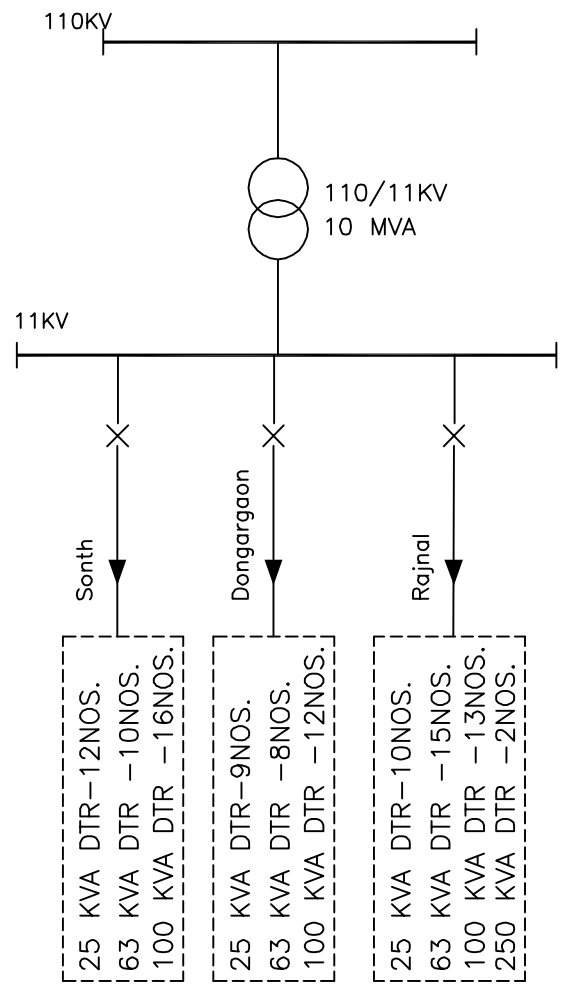

110/33/11 KV MAHAGAON

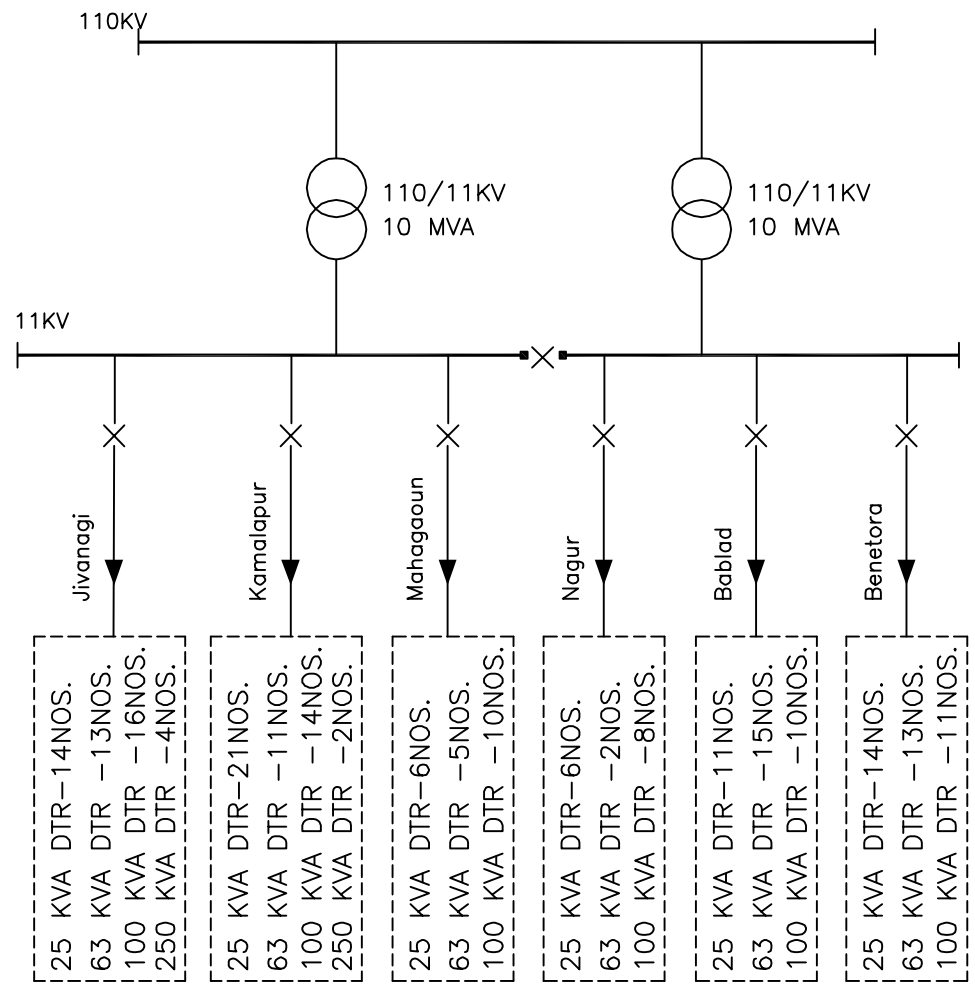

POWER FINANCE CORPORATION. NEW DELHI.

CENTRAL ELECTRICITY REGULATORY COMMISSION. NEW DELHI.

मेकॉन लिमिटेड

MECON LIMITED

NOTE: –

THIS DRAWING PREPARED BASED ON FIRST HAND INFORMATION RECEIVED FROM GESCOM FOR SELECTED CIRCLE AND OUR FIELD VISIT.

REV. NO.	DATE	ZONE	DESCRIPTION	BY	VERIFIED

REVISIONS

REFERENCES | DRG. NO.

THIS DRAWING IS THE PROPERTY OF MECON AND IS ISSUED FOR THE SPECIFIC PROJECT MENTIONED THEREIN. THIS IS NOT TO BE COPIED OR USED FOR OTHER PROJECTS UNLESS EXPRESSLY PERMITTED BY MECON.

SECTION	ELECTRICAL
LOCATION	KOLKATA
DESIGNED	M.K.JAISWARA
DRAWN	M.K.JAISWARA
CHECKED AND VERIFIED	ROBIN DAS
APPROVED	PRADIP ROY

ASSESMENT OF COMPONENT WISE AT&C LOSS FOR KARNATAKA STATE.

SUB–STATION SINLE LINE DIAGRAM WITH 11KV FEEDER DETAILS FOR GULBARGA DIVISION–I UNDER GULBARGA CIRCLE.

SCALE – N.T.S.

DRG.NO.MEC/19.56/Q707/GLB/ID/002

SHEET 1 OF 10 | REV. 0

REV./SEC. | CONCURRED BY

DRG.NO.MEC/19.56/Q707/GLB/ID/002

GULBARGA DIVISION–I

110/11 KV KAPNOOR

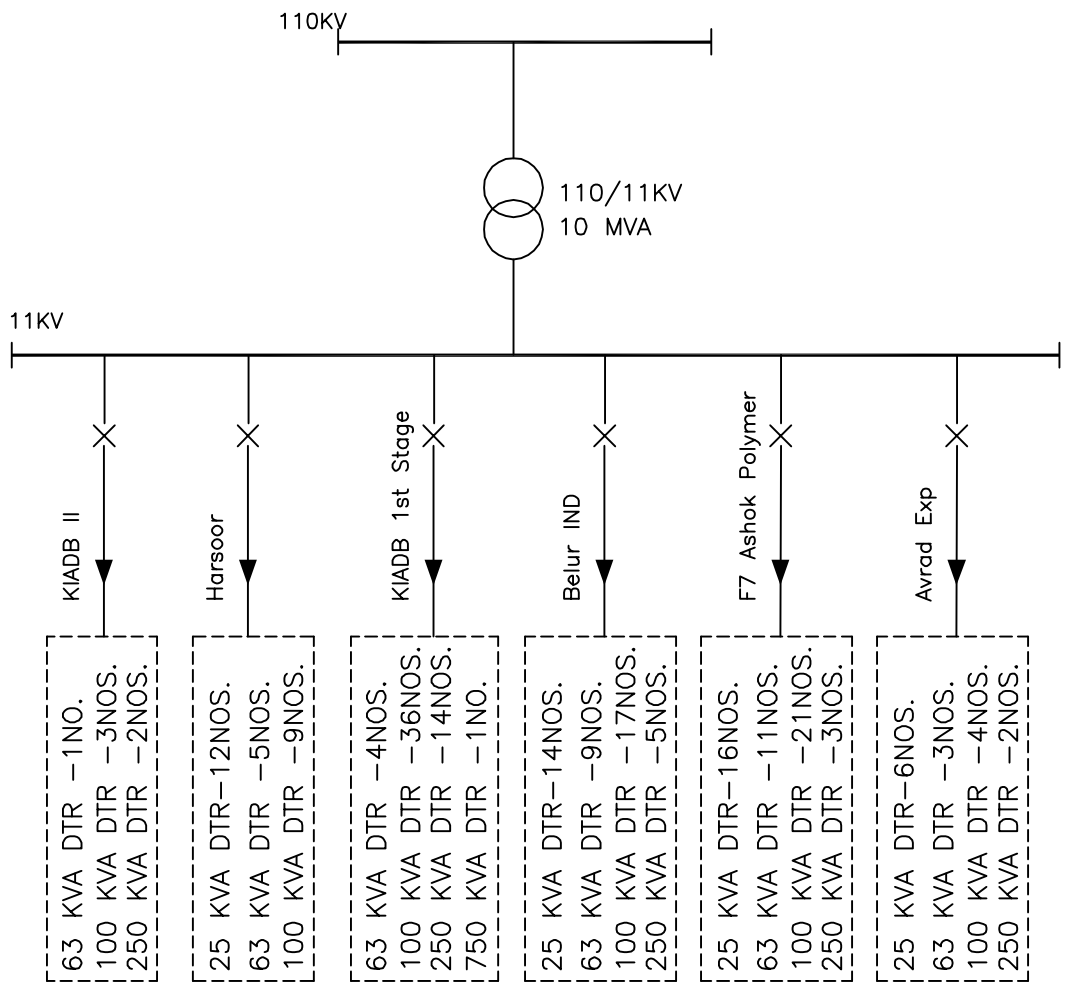

110 KV ALAND

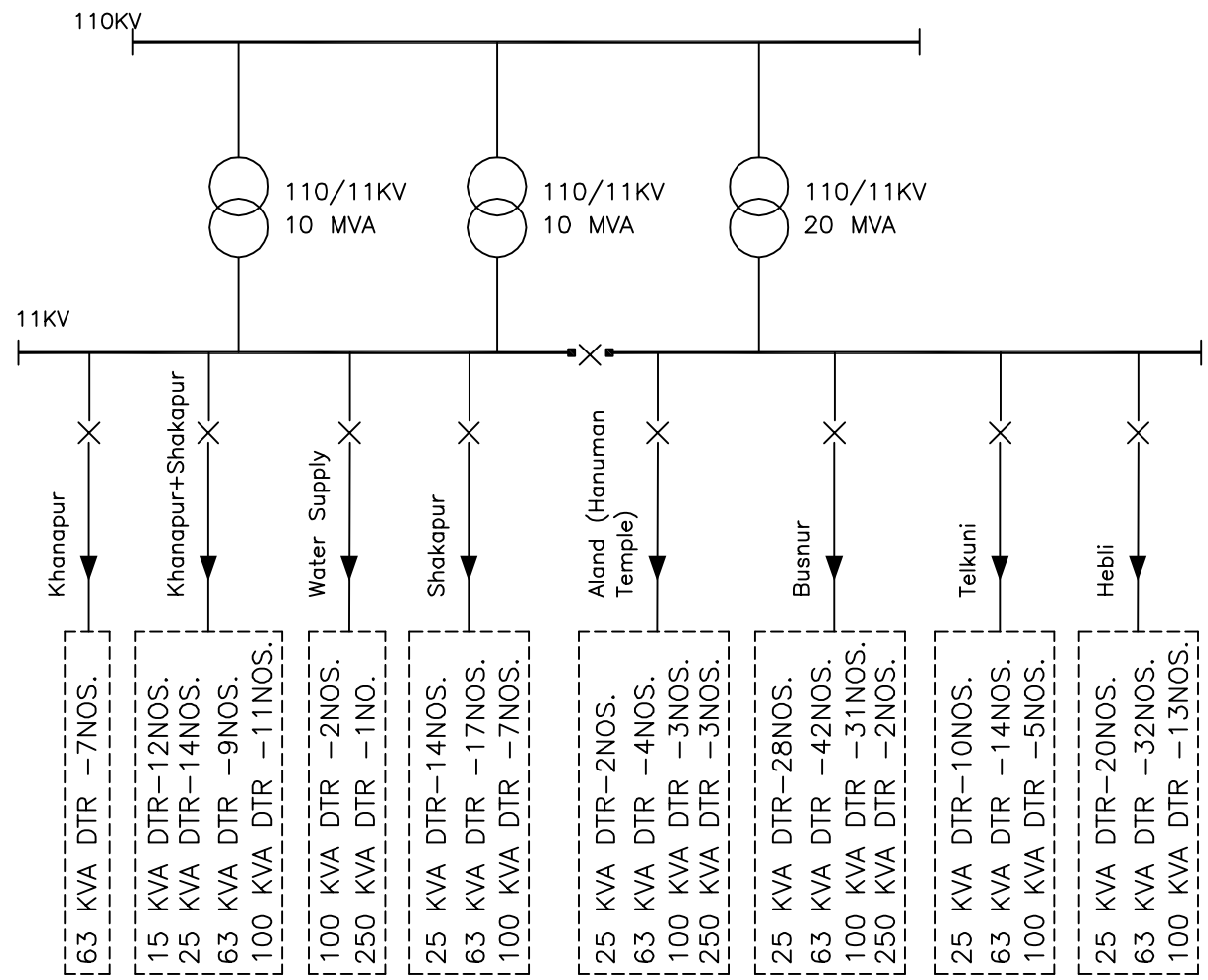

POWER FINANCE CORPORATION. NEW DELHI.

CENTRAL ELECTRICITY REGULATORY COMMISSION. NEW DELHI.

मेकॉन लिमिटेड

MECON LIMITED

NOTE: –

THIS DRAWING PREPARED BASED ON FIRST HAND INFORMATION RECEIVED FROM GESCOM FOR SELECTED CIRCLE AND OUR FIELD VISIT.

REV. NO.	DATE	ZONE	DESCRIPTION	BY	VERIFIED

REVISIONS

REFERENCES | DRG. NO.

THIS DRAWING IS THE PROPERTY OF MECON AND IS ISSUED FOR THE SPECIFIC PROJECT MENTIONED THEREIN. THIS IS NOT TO BE COPIED OR USED FOR OTHER PROJECTS UNLESS EXPRESSLY PERMITTED BY MECON.

SECTION	ELECTRICAL
LOCATION	KOLKATA
DESIGNED	M.K.JAISWARA
DRAWN	M.K.JAISWARA
CHECKED AND VERIFIED	ROBIN DAS
APPROVED	PRADIP ROY

ASSESMENT OF COMPONENT WISE AT&C LOSS FOR KARNATAKA STATE..

SUB–STATION SINLE LINE DIAGRAM WITH 11KV FEEDER DETAILS FOR GULBARGA DIVISION–I UNDER GULBARGA CIRCLE.

SCALE – N.T.S.

DRG.NO.MEC/19.56/Q707/GLB/ID/002

SHEET 2 OF 10 | REV. 0

REV./SEC. | CONCURRED BY

DRG.NO.MEC/19.56/Q707/GLB/ID/002

GULBARGA DIVISION–I

110/11 KV GULBARGA NORTH

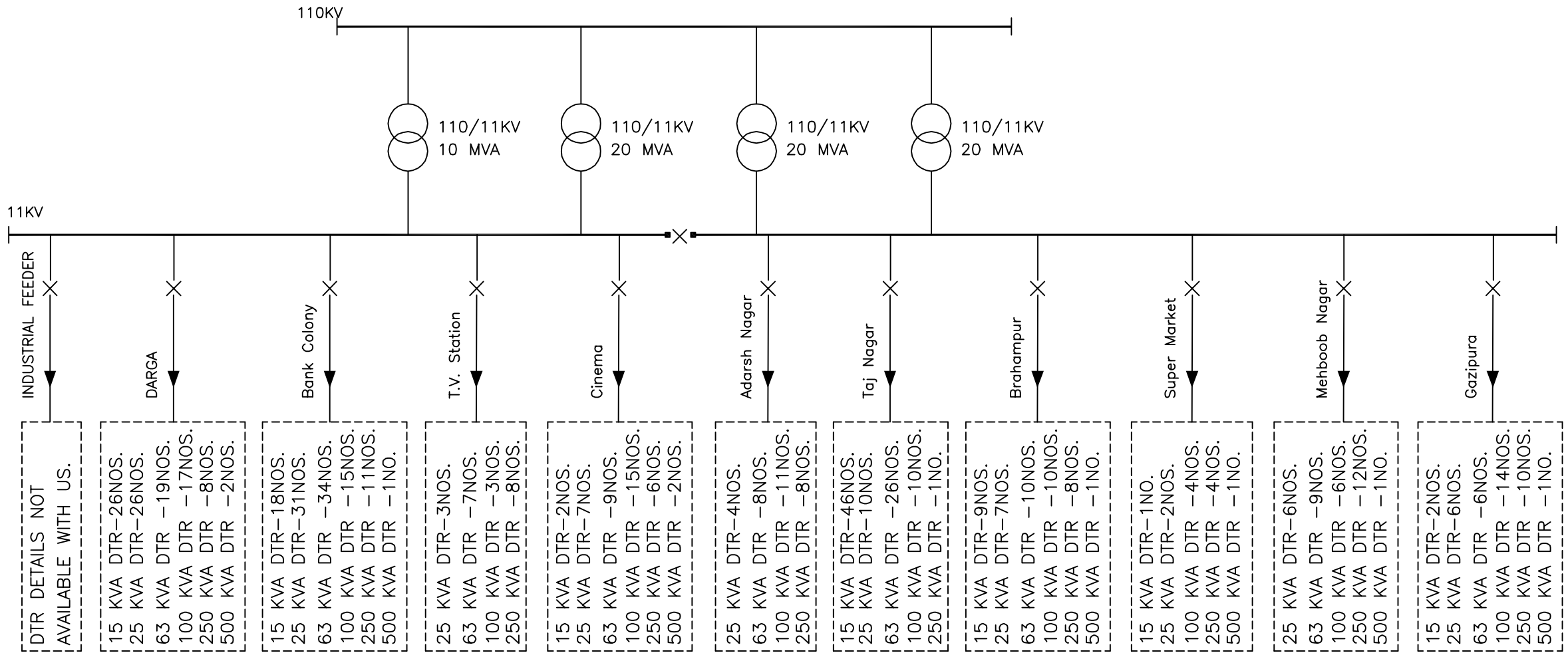

POWER FINANCE CORPORATION. NEW DELHI.

CENTRAL ELECTRICITY REGULATORY COMMISSION. NEW DELHI.

मेकॉन लिमिटेड

MECON LIMITED

NOTE: –

THIS DRAWING PREPARED BASED ON FIRST HAND INFORMATION RECEIVED FROM GESCOM FOR SELECTED CIRCLE AND OUR FIELD VISIT.

REV. NO.	DATE	ZONE	DESCRIPTION	BY	VERIFIED

REVISIONS

REV./SEC. — CONCURRED BY

REFERENCES — DRG. NO.

THIS DRAWING IS THE PROPERTY OF MECON AND IS ISSUED FOR THE SPECIFIC PROJECT MENTIONED THEREIN. THIS IS NOT TO BE COPIED OR USED FOR OTHER PROJECTS UNLESS EXPRESSLY PERMITTED BY MECON.

SECTION	ELECTRICAL
LOCATION	KOLKATA
DESIGNED	M.K.JAISWARA
DRAWN	M.K.JAISWARA
CHECKED AND VERIFIED	ROBIN DAS
APPROVED	PRADIP ROY

ASSESMENT OF COMPONENT WISE AT&C LOSS FOR KARNATAKA STATE..

SUB–STATION SINLE LINE DIAGRAM WITH 11KV FEEDER DETAILS FOR GULBARGA DIVISION–I UNDER GULBARGA CIRCLE.

SCALE – N.T.S.

DRG.NO.MEC/19.56/Q707/GLB/ID/002

SHEET 3 OF 10 — REV. 0

DRG.NO.MEC/19.56/Q707/GLB/ID/002

GULBARGA DIVISION–I

110/11 KV GULBARGA UNIVERSITY

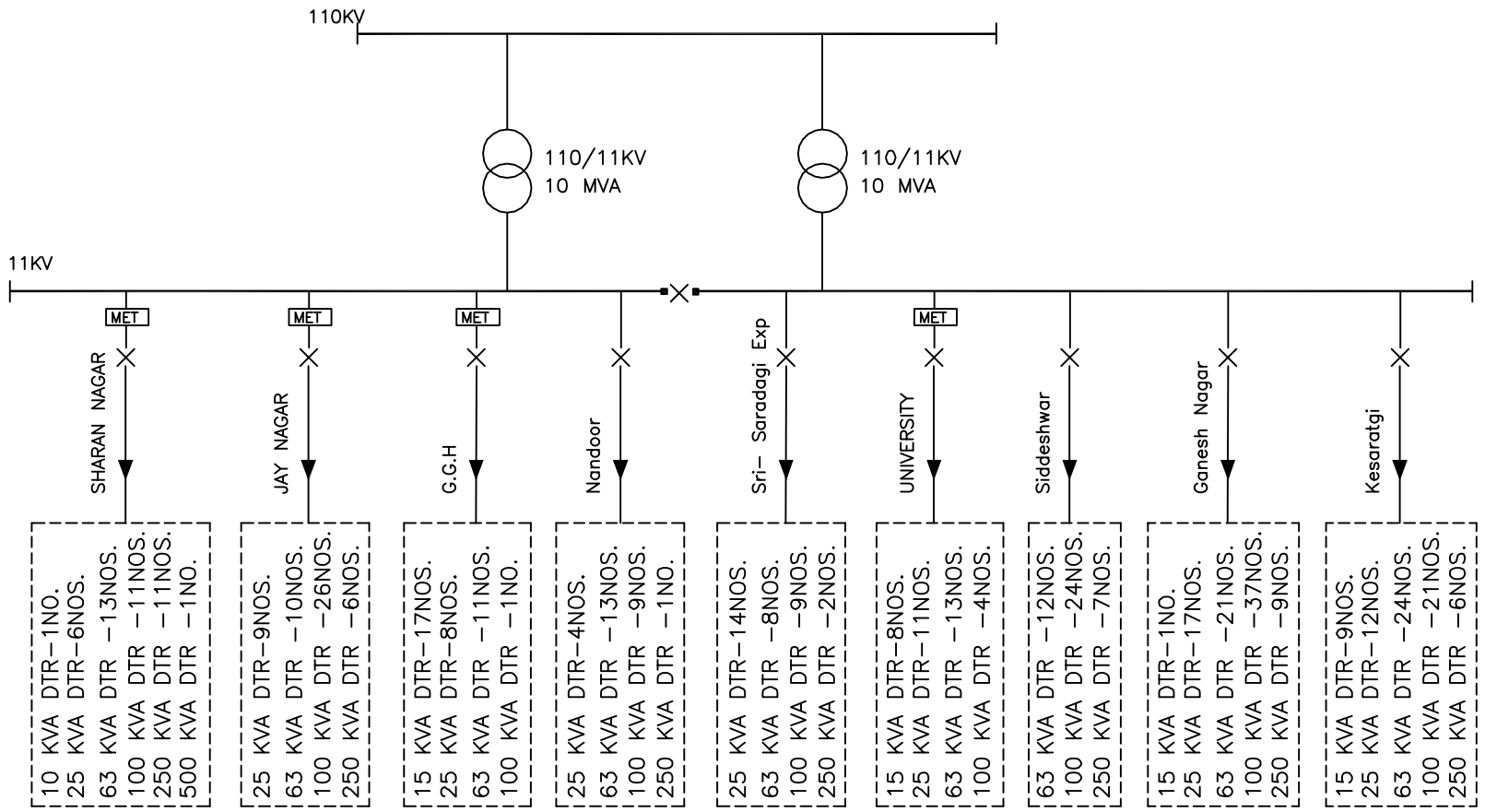

110/33/11 KV GULBARGA WEST

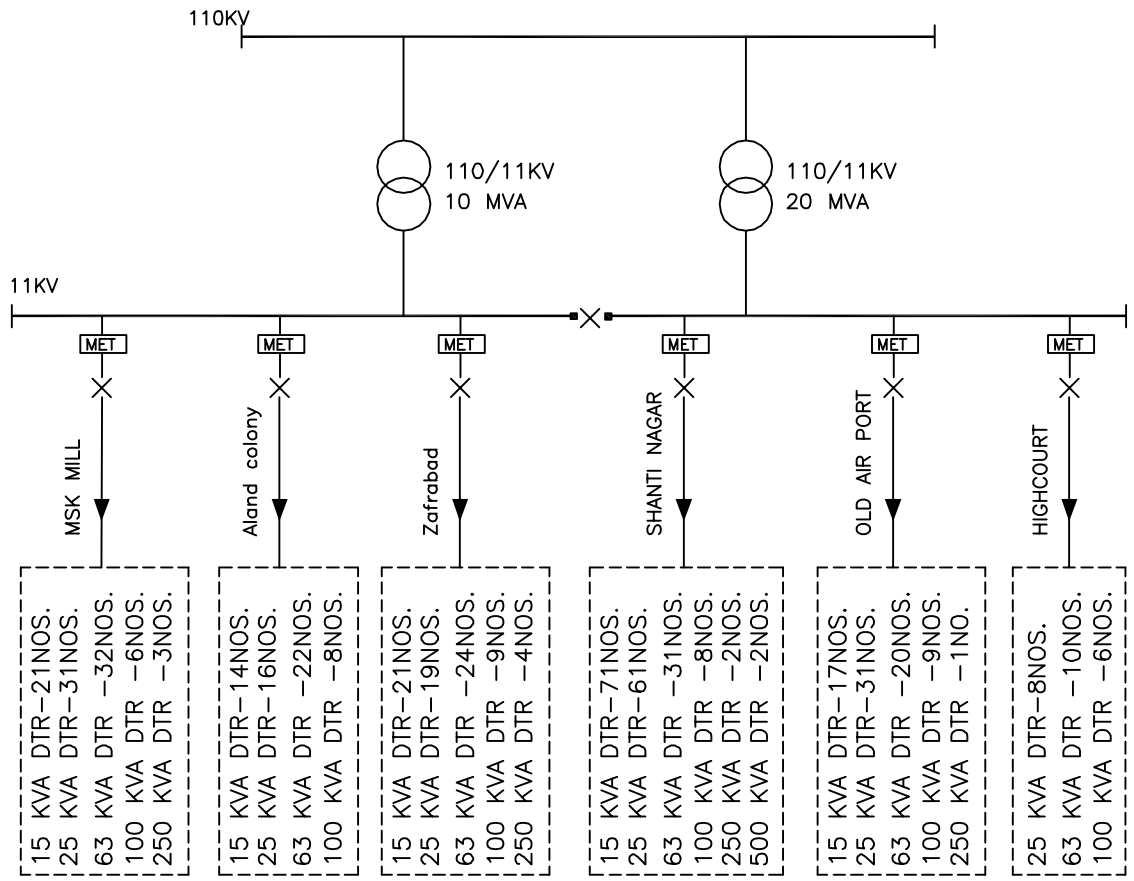

POWER FINANCE CORPORATION. NEW DELHI.

CENTRAL ELECTRICITY REGULATORY COMMISSION. NEW DELHI.

मेकॉन लिमिटेड

MECON LIMITED

NOTE: –

THIS DRAWING PREPARED BASED ON FIRST HAND INFORMATION RECEIVED FROM GESCOM FOR SELECTED CIRCLE AND OUR FIELD VISIT.

REV. NO.	DATE	ZONE	DESCRIPTION	BY	VERIFIED

REVISIONS

REFERENCES | DRG. NO.

THIS DRAWING IS THE PROPERTY OF MECON AND IS ISSUED FOR THE SPECIFIC PROJECT MENTIONED THEREIN. THIS IS NOT TO BE COPIED OR USED FOR OTHER PROJECTS UNLESS EXPRESSLY PERMITTED BY MECON.

SECTION	ELECTRICAL
LOCATION	KOLKATA
DESIGNED	M.K.JAISWARA
DRAWN	M.K.JAISWARA
CHECKED AND VERIFIED	ROBIN DAS
APPROVED	PRADIP ROY

ASSESMENT OF COMPONENT WISE AT&C LOSS FOR KARNATAKA STATE..

SUB–STATION SINLE LINE DIAGRAM WITH 11KV FEEDER DETAILS FOR GULBARGA DIVISION–I UNDER GULBARGA CIRCLE.

SCALE – N.T.S.

DRG.NO.MEC/19.56/Q707/GLB/ID/002

SHEET 4 OF 10 | REV. 0

REV./SEC. | CONCURRED BY

DRG.NO.MEC/19.56/Q707/GLB/ID/002

GULBARGA DIVISION–I

110/11 KV GULBARGA SOUTH

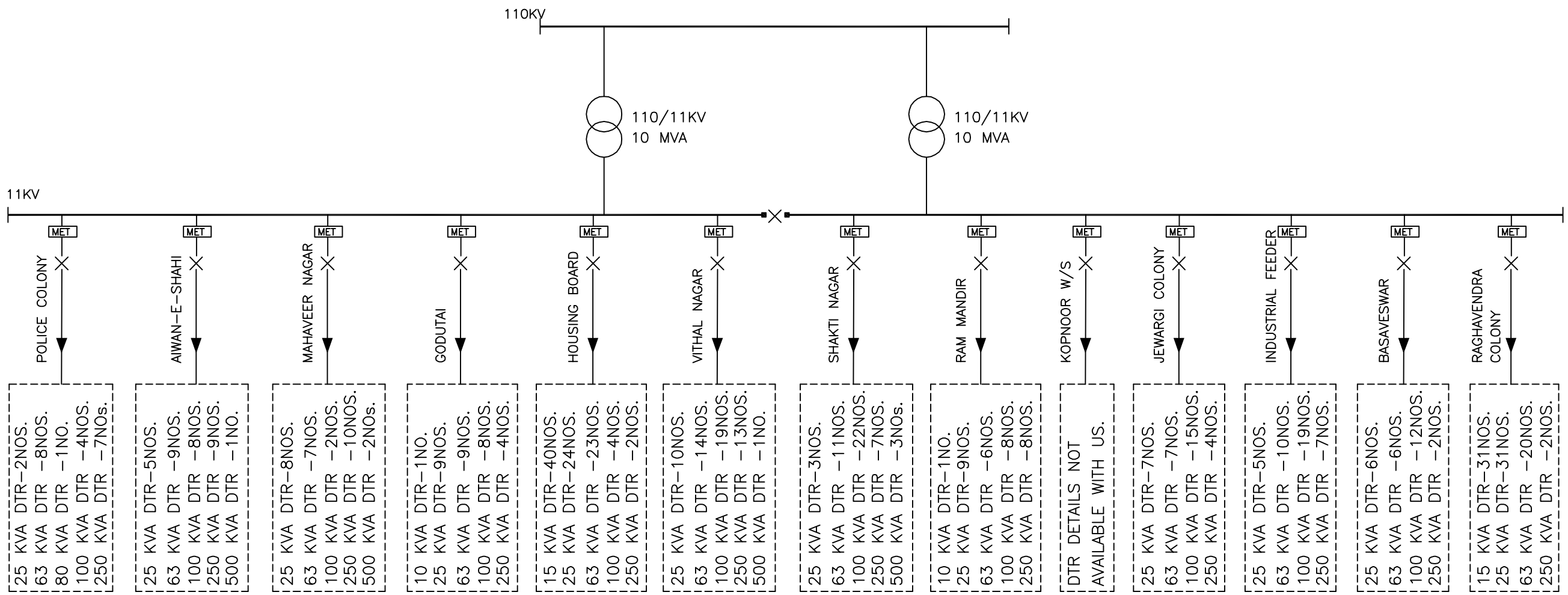

POWER FINANCE CORPORATION. NEW DELHI.

CENTRAL ELECTRICITY REGULATORY COMMISSION. NEW DELHI.

मेकॉन लिमिटेड

MECON LIMITED

NOTE: –

THIS DRAWING PREPARED BASED ON FIRST HAND INFORMATION RECEIVED FROM GESCOM FOR SELECTED CIRCLE AND OUR FIELD VISIT.

REV. NO.	DATE	ZONE	DESCRIPTION	BY	VERIFIED

REVISIONS

REFERENCES | DRG. NO.

THIS DRAWING IS THE PROPERTY OF MECON AND IS ISSUED FOR THE SPECIFIC PROJECT MENTIONED THEREIN. THIS IS NOT TO BE COPIED OR USED FOR OTHER PROJECTS UNLESS EXPRESSLY PERMITTED BY MECON.

SECTION	ELECTRICAL
LOCATION	KOLKATA
DESIGNED	M.K.JAISWARA
DRAWN	M.K.JAISWARA
CHECKED AND VERIFIED	ROBIN DAS
APPROVED	PRADIP ROY

ASSESMENT OF COMPONENT WISE AT&C LOSS FOR KARNATAKA STATE..

SUB–STATION SINLE LINE DIAGRAM WITH 11KV FEEDER DETAILS FOR GULBARGA DIVISION–I UNDER GULBARGA CIRCLE.

SCALE – N.T.S.

DRG.NO.MEC/19.56/Q707/GLB/ID/002

SHEET 5 OF 10 | REV. 0

REV./SEC. | CONCURRED BY

DRG.NO.MEC/19.56/Q707/GLB/ID/002

GULBARGA DIVISION–I

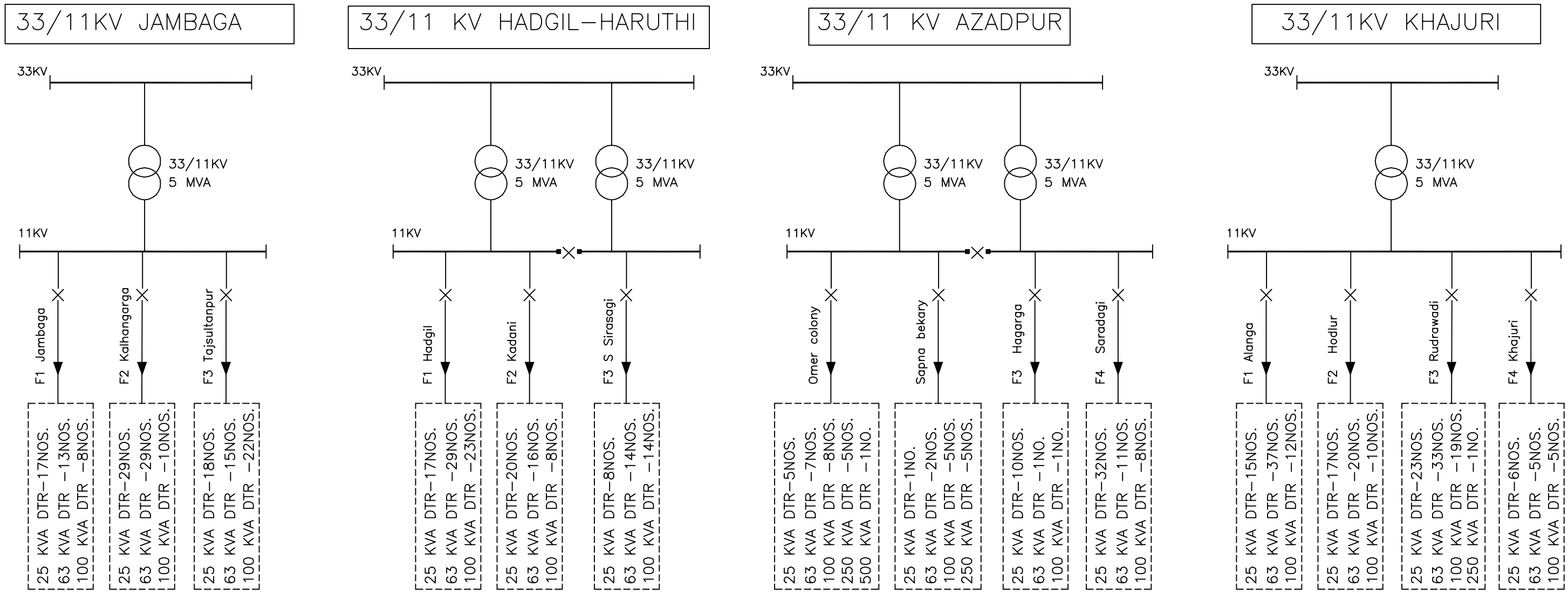

POWER FINANCE CORPORATION. NEW DELHI.

CENTRAL ELECTRICITY REGULATORY COMMISSION. NEW DELHI.

मेकॉन लिमिटेड

MECON LIMITED

ISO 9001 COMPANY

NOTE: –

THIS DRAWING PREPARED BASED ON FIRST HAND INFORMATION RECEIVED FROM GESCOM FOR SELECTED CIRCLE AND OUR FIELD VISIT.

REV. NO.	DATE	ZONE	DESCRIPTION	BY	VERIFIED

REVISIONS

REV./SEC. — CONCURRED BY

REFERENCES	DRG. NO.

THIS DRAWING IS THE PROPERTY OF MECON AND IS ISSUED FOR THE SPECIFIC PROJECT MENTIONED THEREIN. THIS IS NOT TO BE COPIED OR USED FOR OTHER PROJECTS UNLESS EXPRESSLY PERMITTED BY MECON.

SECTION	ELECTRICAL
LOCATION	KOLKATA
DESIGNED	M.K.JAISWARA
DRAWN	M.K.JAISWARA
CHECKED AND VERIFIED	ROBIN DAS
APPROVED	PRADIP ROY

ASSESMENT OF COMPONENT WISE AT&C LOSS FOR KARNATAKA STATE..

SUB–STATION SINLE LINE DIAGRAM WITH 11KV FEEDER DETAILS FOR GULBARGA DIVISION–I UNDER GULBARGA CIRCLE.

SCALE – N.T.S.

DRG.NO.MEC/19.56/Q707/GLB/ID/002

SHEET 6 OF 10

REV. 0

DRG.NO.MEC/19.56/Q707/GLB/ID/002

GULBARGA DIVISION–I

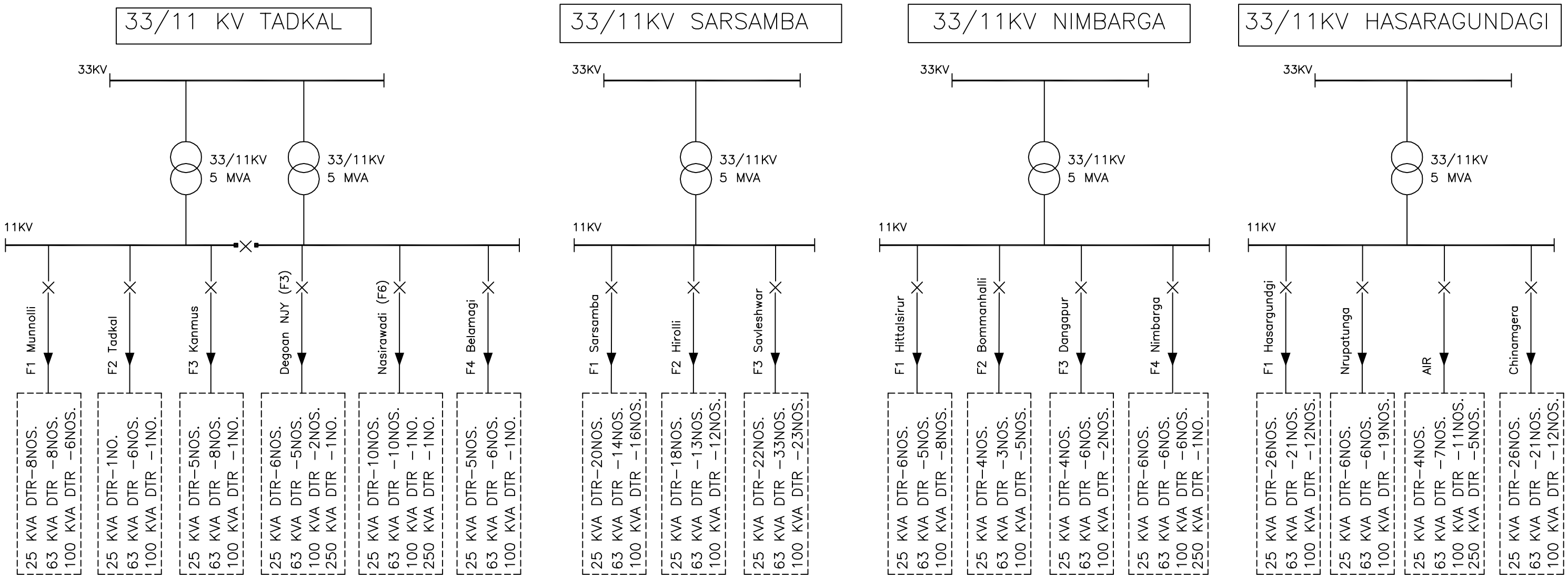

POWER FINANCE CORPORATION. NEW DELHI.

CENTRAL ELECTRICITY REGULATORY COMMISSION. NEW DELHI.

मेकॉन लिमिटेड

MECON LIMITED

ISO 9001 COMPANY

NOTE: –

THIS DRAWING PREPARED BASED ON FIRST HAND INFORMATION RECEIVED FROM GESCOM FOR SELECTED CIRCLE AND OUR FIELD VISIT.

REV. NO.	DATE	ZONE	DESCRIPTION	BY	VERIFIED

REVISIONS

REV./SEC. — CONCURRED BY

REFERENCES	DRG. NO.

THIS DRAWING IS THE PROPERTY OF MECON AND IS ISSUED FOR THE SPECIFIC PROJECT MENTIONED THEREIN. THIS IS NOT TO BE COPIED OR USED FOR OTHER PROJECTS UNLESS EXPRESSLY PERMITTED BY MECON.

SECTION	ELECTRICAL
LOCATION	KOLKATA
DESIGNED	M.K.JAISWARA
DRAWN	M.K.JAISWARA
CHECKED AND VERIFIED	ROBIN DAS
APPROVED	PRADIP ROY

ASSESMENT OF COMPONENT WISE AT&C LOSS FOR KARNATAKA STATE..

SUB–STATION SINLE LINE DIAGRAM WITH 11KV FEEDER DETAILS FOR GULBARGA DIVISION–I UNDER GULBARGA CIRCLE.

SCALE – N.T.S.

DRG.NO.MEC/19.56/Q707/GLB/ID/002

SHEET 7 OF 10 — REV. 0

DRG.NO.MEC/19.56/Q707/GLB/ID/002

GULBARGA DIVISION–I

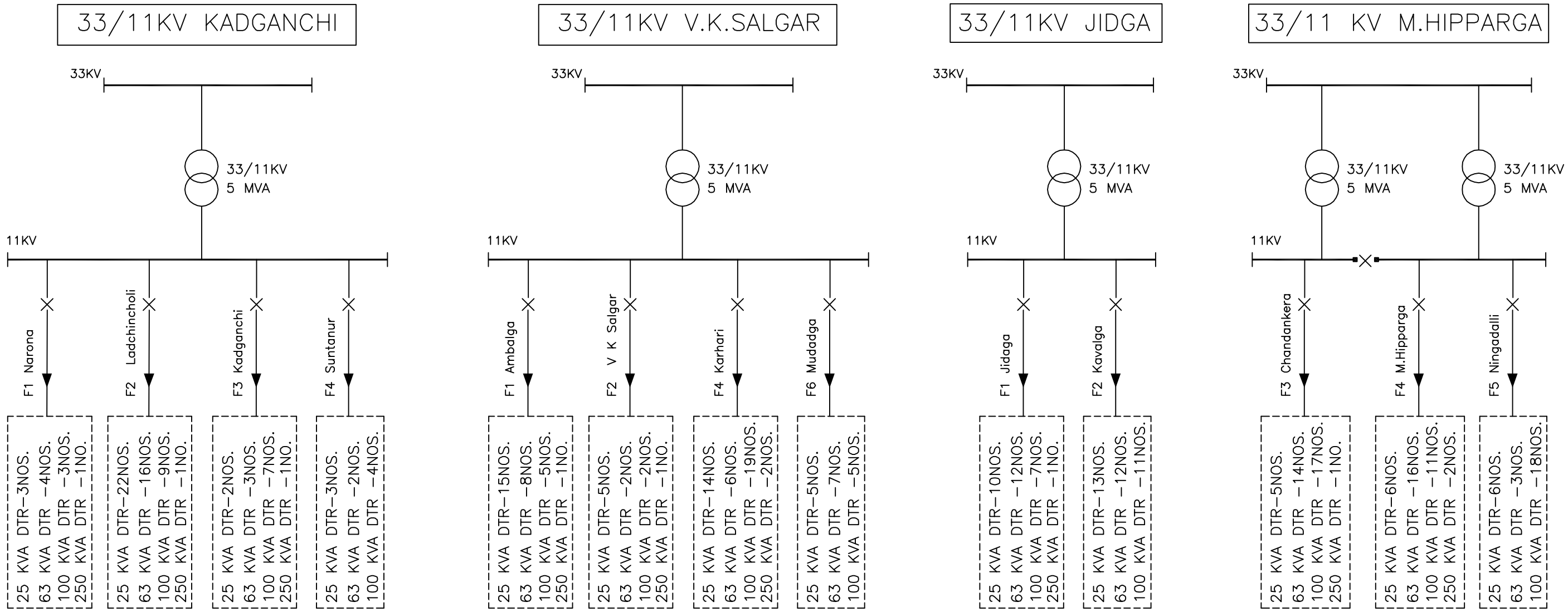

POWER FINANCE CORPORATION. NEW DELHI.

CENTRAL ELECTRICITY REGULATORY COMMISSION. NEW DELHI.

मेकॉन लिमिटेड

MECON LIMITED

NOTE: –

THIS DRAWING PREPARED BASED ON FIRST HAND INFORMATION RECEIVED FROM GESCOM FOR SELECTED CIRCLE AND OUR FIELD VISIT.

REV. NO.	DATE	ZONE	DESCRIPTION	BY	VERIFIED

REVISIONS

REV./SEC. — CONCURRED BY

REFERENCES	DRG. NO.

THIS DRAWING IS THE PROPERTY OF MECON AND IS ISSUED FOR THE SPECIFIC PROJECT MENTIONED THEREIN. THIS IS NOT TO BE COPIED OR USED FOR OTHER PROJECTS UNLESS EXPRESSLY PERMITTED BY MECON.

SECTION	ELECTRICAL
LOCATION	KOLKATA
DESIGNED	M.K.JAISWARA
DRAWN	M.K.JAISWARA
CHECKED AND VERIFIED	ROBIN DAS
APPROVED	PRADIP ROY

ASSESMENT OF COMPONENT WISE AT&C LOSS FOR KARNATAKA STATE..

SUB–STATION SINLE LINE DIAGRAM WITH 11KV FEEDER DETAILS FOR GULBARGA DIVISION–I UNDER GULBARGA CIRCLE.

SCALE – N.T.S.

DRG.NO.MEC/19.56/Q707/GLB/ID/002

SHEET 8 OF 10 REV. 0

DRG.NO.MEC/19.56/Q707/GLB/ID/002

GULBARGA DIVISION–I

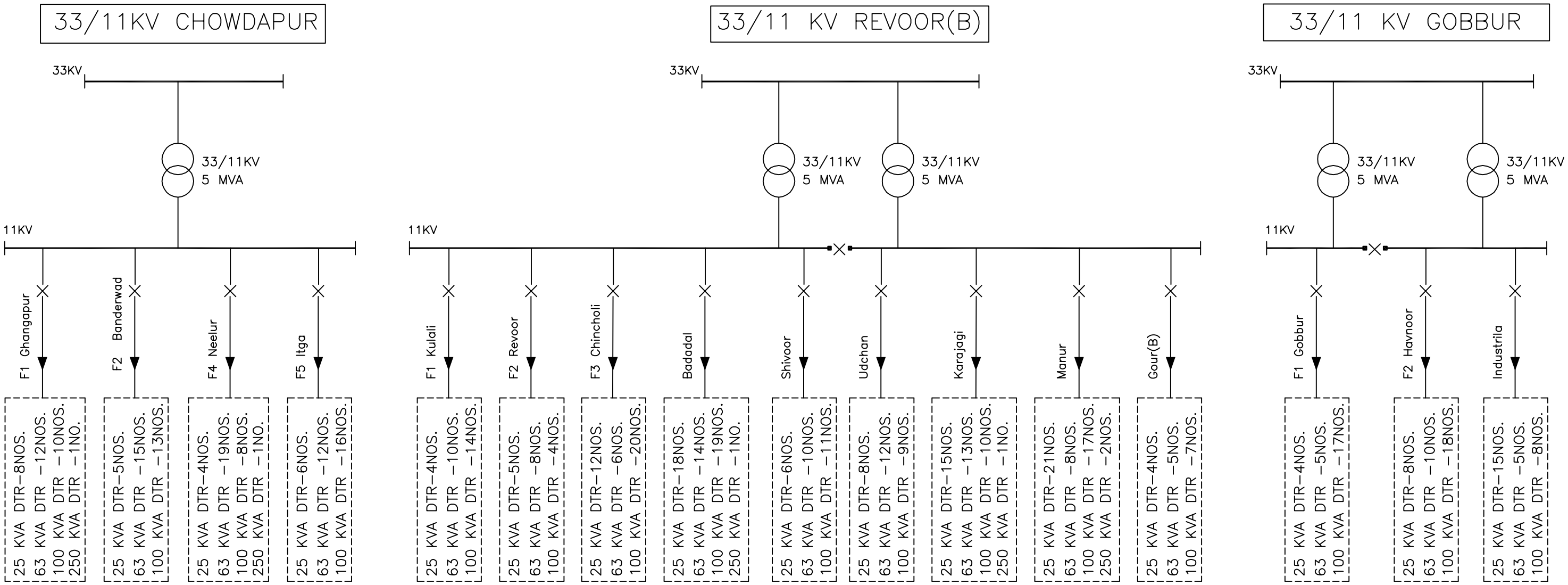

POWER FINANCE CORPORATION. NEW DELHI.

CENTRAL ELECTRICITY REGULATORY COMMISSION. NEW DELHI.

मेकॉन लिमिटेड

MECON LIMITED

NOTE: –

THIS DRAWING PREPARED BASED ON FIRST HAND INFORMATION RECEIVED FROM GESCOM FOR SELECTED CIRCLE AND OUR FIELD VISIT.

REV. NO.	DATE	ZONE	DESCRIPTION	BY	VERIFIED

REVISIONS

REFERENCES | DRG. NO.

THIS DRAWING IS THE PROPERTY OF MECON AND IS ISSUED FOR THE SPECIFIC PROJECT MENTIONED THEREIN. THIS IS NOT TO BE COPIED OR USED FOR OTHER PROJECTS UNLESS EXPRESSLY PERMITTED BY MECON.

SECTION	ELECTRICAL
LOCATION	KOLKATA
DESIGNED	M.K.JAISWARA
DRAWN	M.K.JAISWARA
CHECKED AND VERIFIED	ROBIN DAS
APPROVED	PRADIP ROY

ASSESMENT OF COMPONENT WISE AT&C LOSS FOR KARNATAKA STATE..

SUB–STATION SINLE LINE DIAGRAM WITH 11KV FEEDER DETAILS FOR GULBARGA DIVISION–I UNDER GULBARGA CIRCLE.

SCALE – N.T.S.

DRG.NO.MEC/19.56/Q707/GLB/ID/002

SHEET 9 OF 10 | REV. 0

REV./SEC. | CONCURRED BY

DRG.NO.MEC/19.56/Q707/GLB/ID/002

GULBARGA DIVISION–I

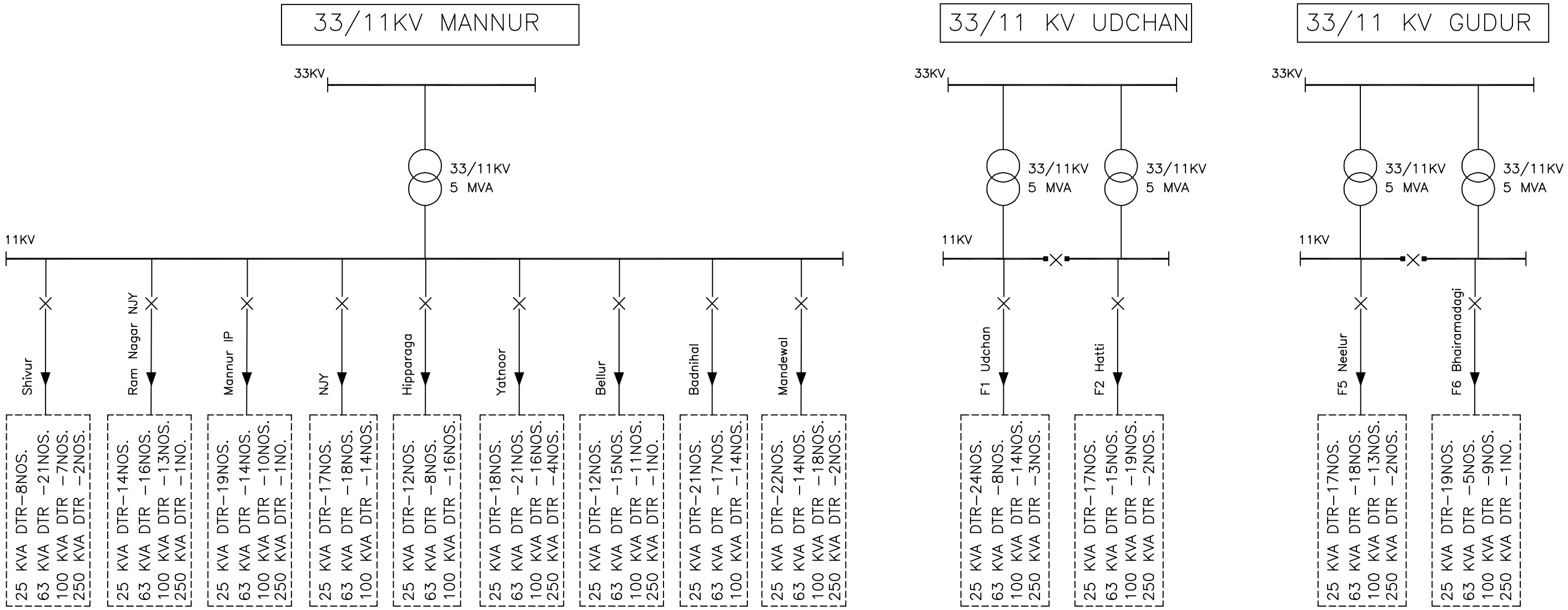

POWER FINANCE CORPORATION. NEW DELHI.

CENTRAL ELECTRICITY REGULATORY COMMISSION. NEW DELHI.

मेकॉन लिमिटेड

MECON LIMITED

NOTE: –

THIS DRAWING PREPARED BASED ON FIRST HAND INFORMATION RECEIVED FROM GESCOM FOR SELECTED CIRCLE AND OUR FIELD VISIT.

REV. NO.	DATE	ZONE	DESCRIPTION	BY	VERIFIED

REVISIONS

REV./SEC. — CONCURRED BY

REFERENCES	DRG. NO.

THIS DRAWING IS THE PROPERTY OF MECON AND IS ISSUED FOR THE SPECIFIC PROJECT MENTIONED THEREIN. THIS IS NOT TO BE COPIED OR USED FOR OTHER PROJECTS UNLESS EXPRESSLY PERMITTED BY MECON.

SECTION	ELECTRICAL
LOCATION	KOLKATA
DESIGNED	M.K.JAISWARA
DRAWN	M.K.JAISWARA
CHECKED AND VERIFIED	ROBIN DAS
APPROVED	PRADIP ROY

ASSESMENT OF COMPONENT WISE AT&C LOSS FOR KARNATAKA STATE..

SUB–STATION SINLE LINE DIAGRAM WITH 11KV FEEDER DETAILS FOR GULBARGA DIVISION–I UNDER GULBARGA CIRCLE.

SCALE – N.T.S.

DRG.NO.MEC/19.56/Q707/GLB/ID/002

SHEET 10 OF 10 REV. 0

DRAWING DESCRIPTION : SUB-STATION SLD WITH 11KV FEEDER DETAILS FOR GULBARGA DIVISION-II UNDER GULBARGA CIRCLE.

DRAWING NO. : MEC/19.56/Q707/GLB/ID/003

NO. OF SHEETS : 05

DRG.NO.MEC/19.56/Q707/GLB/ID/003

GULBARGA DIVISION–II

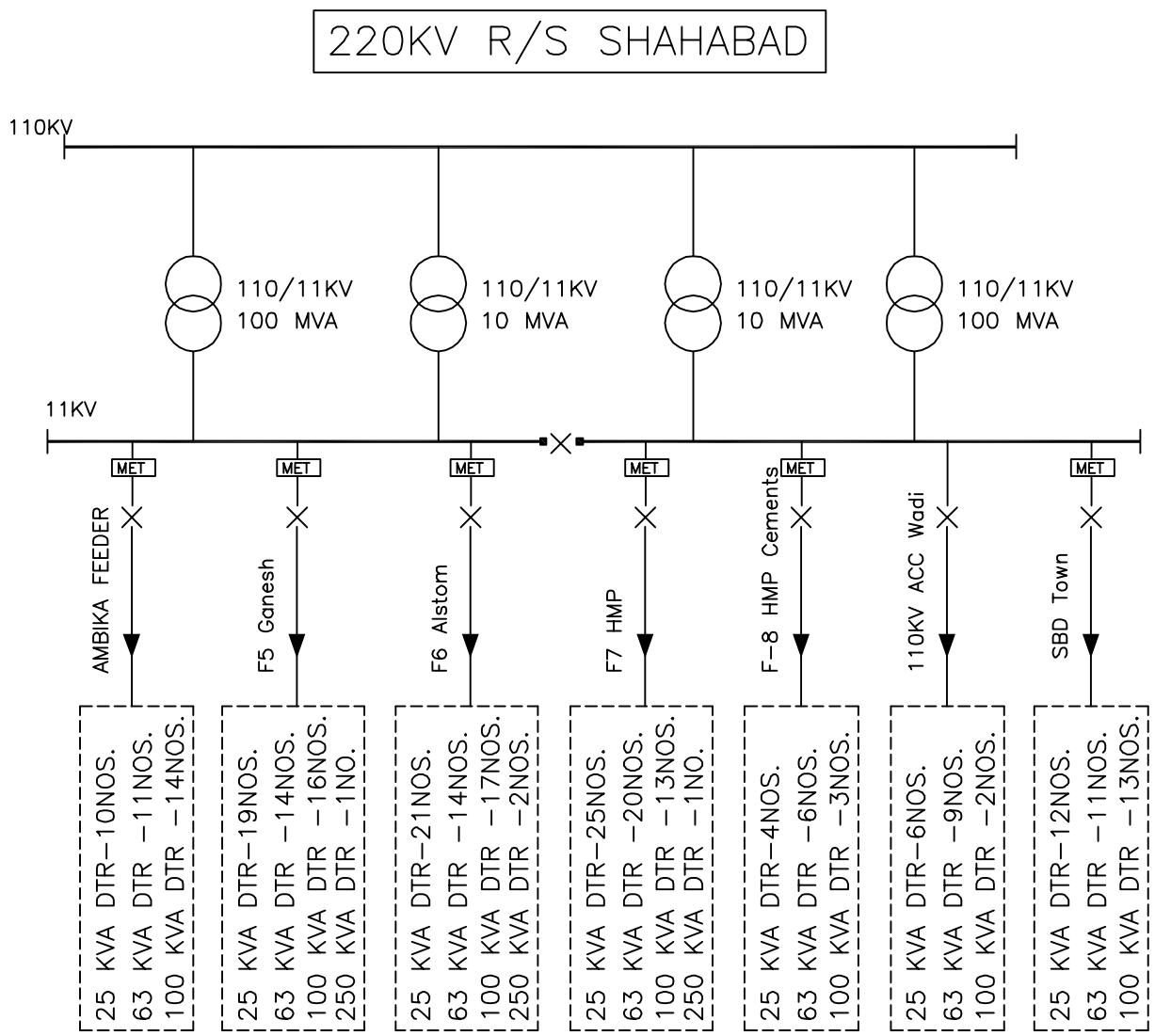

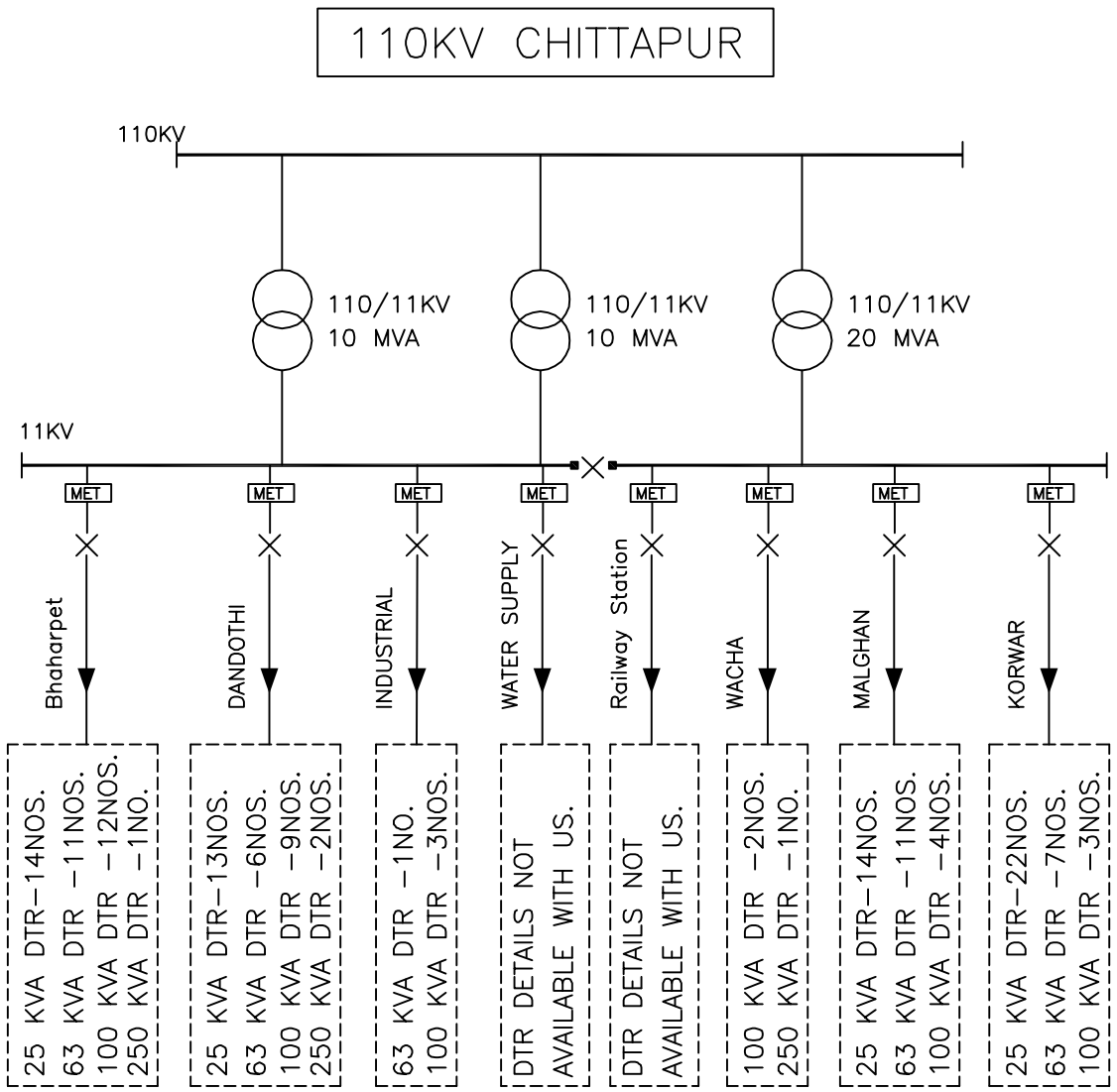

POWER FINANCE CORPORATION. NEW DELHI.

CENTRAL ELECTRICITY REGULATORY COMMISSION. NEW DELHI.

मेकॉन लिमिटेड

MECON LIMITED

NOTE: –

THIS DRAWING PREPARED BASED ON FIRST HAND INFORMATION RECEIVED FROM GESCOM FOR SELECTED CIRCLE AND OUR FIELD VISIT.

REV. NO.	DATE	ZONE	DESCRIPTION	BY	VERIFIED

REVISIONS

REV./SEC. — CONCURRED BY

REFERENCES — DRG. NO.

THIS DRAWING IS THE PROPERTY OF MECON AND IS ISSUED FOR THE SPECIFIC PROJECT MENTIONED THEREIN. THIS IS NOT TO BE COPIED OR USED FOR OTHER PROJECTS UNLESS EXPRESSLY PERMITTED BY MECON.

SECTION	ELECTRICAL
LOCATION	KOLKATA
DESIGNED	M.K.JAISWARA
DRAWN	M.K.JAISWARA
CHECKED AND VERIFIED	ROBIN DAS
APPROVED	PRADIP ROY

ASSESMENT OF COMPONENT WISE AT&C LOSS FOR KARNATAKA STATE..

SUB–STATION SINLE LINE DIAGRAM WITH 11KV FEEDER DETAILS FOR GULBARGA DIVISION–II UNDER GULBARGA CIRCLE.

SCALE – N.T.S.

DRG.NO.MEC/19.56/Q707/GLB/ID/003

SHEET 1 OF 5 — REV. 0

DRG.NO.MEC/19.56/Q707/GLB/ID/003

GULBARGA DIVISION–II

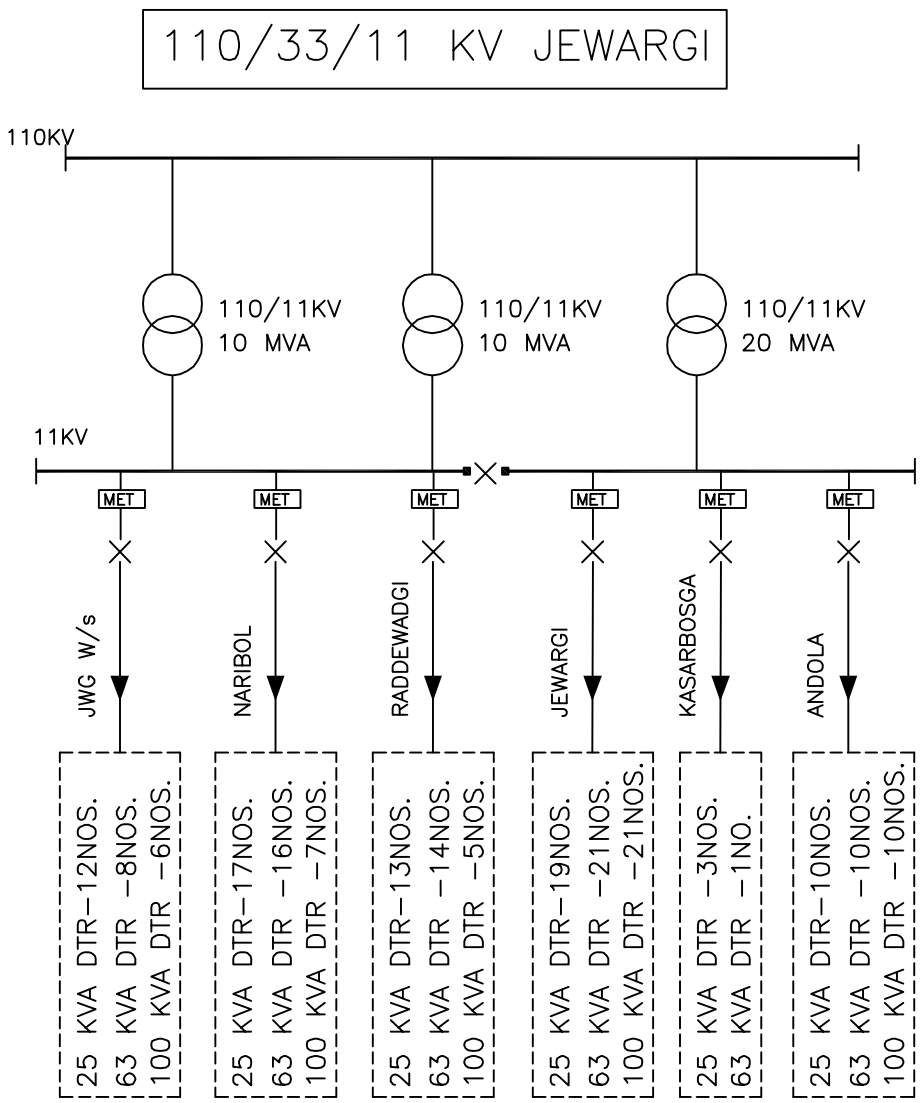

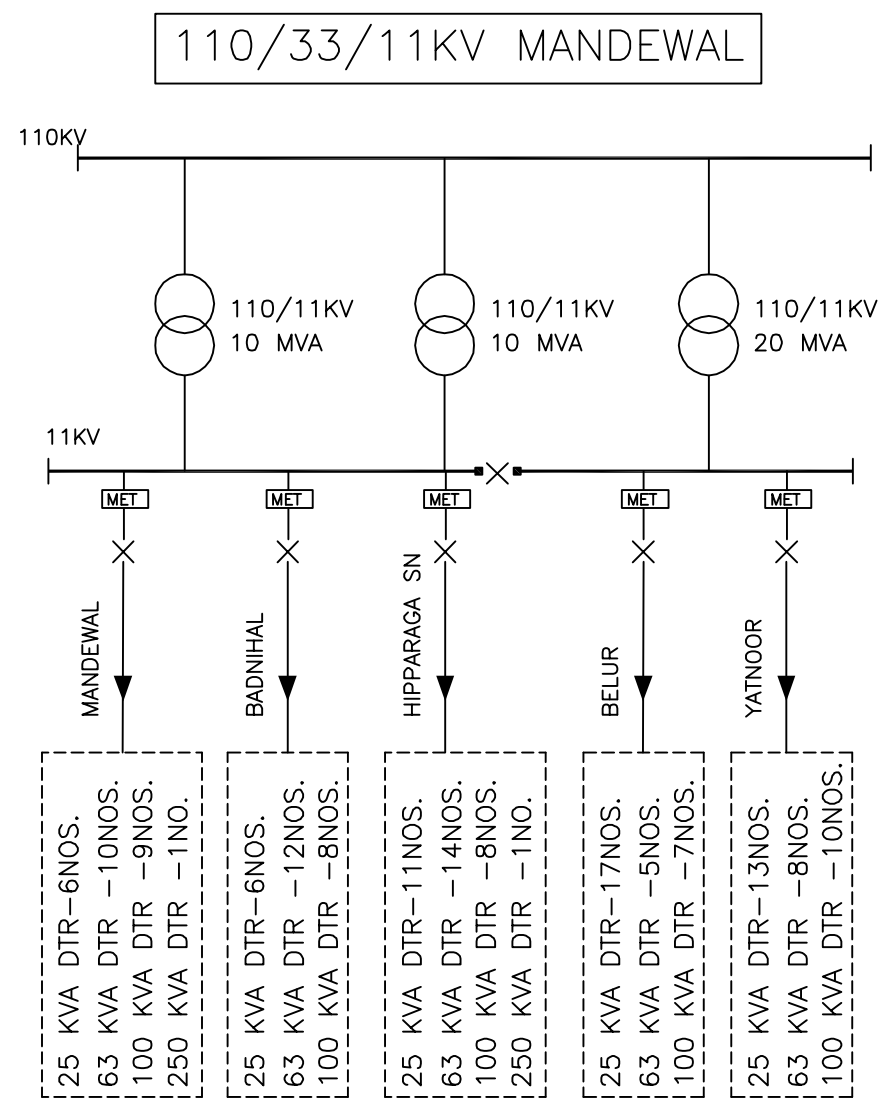

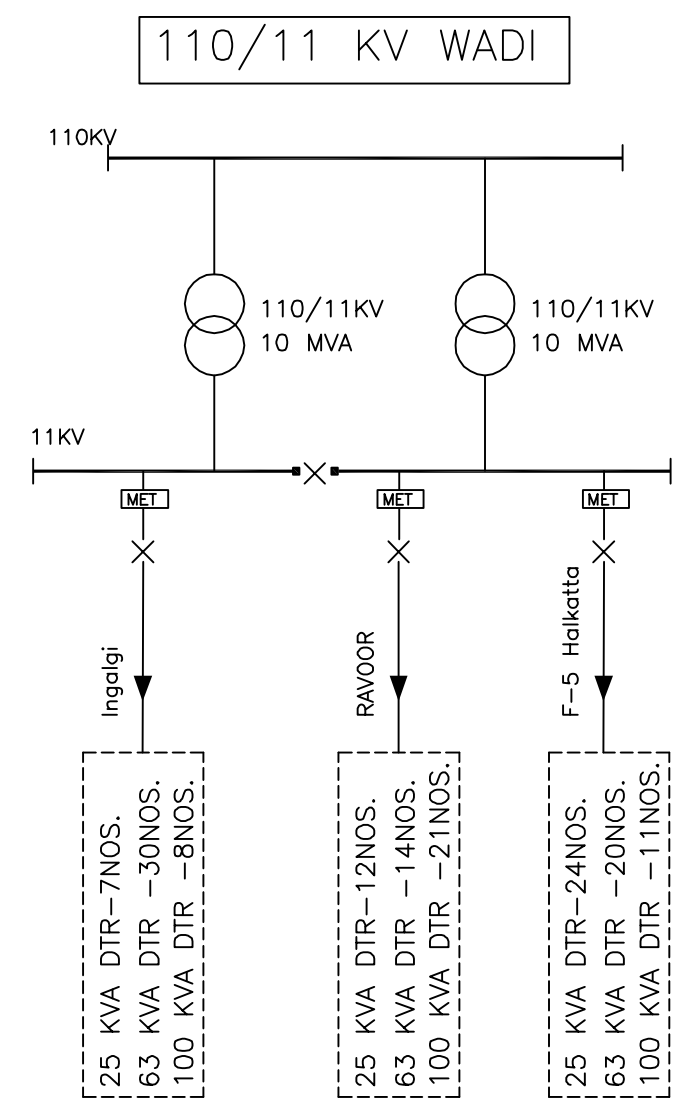

POWER FINANCE CORPORATION. NEW DELHI.

CENTRAL ELECTRICITY REGULATORY COMMISSION. NEW DELHI.

मेकॉन लिमिटेड

MECON LIMITED

ISO 9001 COMPANY

NOTE: –

THIS DRAWING PREPARED BASED ON FIRST HAND INFORMATION RECEIVED FROM GESCOM FOR SELECTED CIRCLE AND OUR FIELD VISIT.

REV. NO.	DATE	ZONE	DESCRIPTION	BY	VERIFIED

REVISIONS

REV./SEC. — CONCURRED BY

REFERENCES	DRG. NO.

THIS DRAWING IS THE PROPERTY OF MECON AND IS ISSUED FOR THE SPECIFIC PROJECT MENTIONED THEREIN. THIS IS NOT TO BE COPIED OR USED FOR OTHER PROJECTS UNLESS EXPRESSLY PERMITTED BY MECON.

SECTION	ELECTRICAL
LOCATION	KOLKATA
DESIGNED	M.K.JAISWARA
DRAWN	M.K.JAISWARA
CHECKED AND VERIFIED	ROBIN DAS
APPROVED	PRADIP ROY

ASSESMENT OF COMPONENT WISE AT&C LOSS FOR KARNATAKA STATE.

SUB–STATION SINLE LINE DIAGRAM WITH 11KV FEEDER DETAILS FOR GULBARGA DIVISION–II UNDER GULBARGA CIRCLE.

SCALE – N.T.S.

DRG.NO.MEC/19.56/Q707/GLB/ID/003

SHEET 2 OF 5 — REV. 0

DRG.NO.MEC/19.56/Q707/GLB/ID/003

GULBARGA DIVISION–II

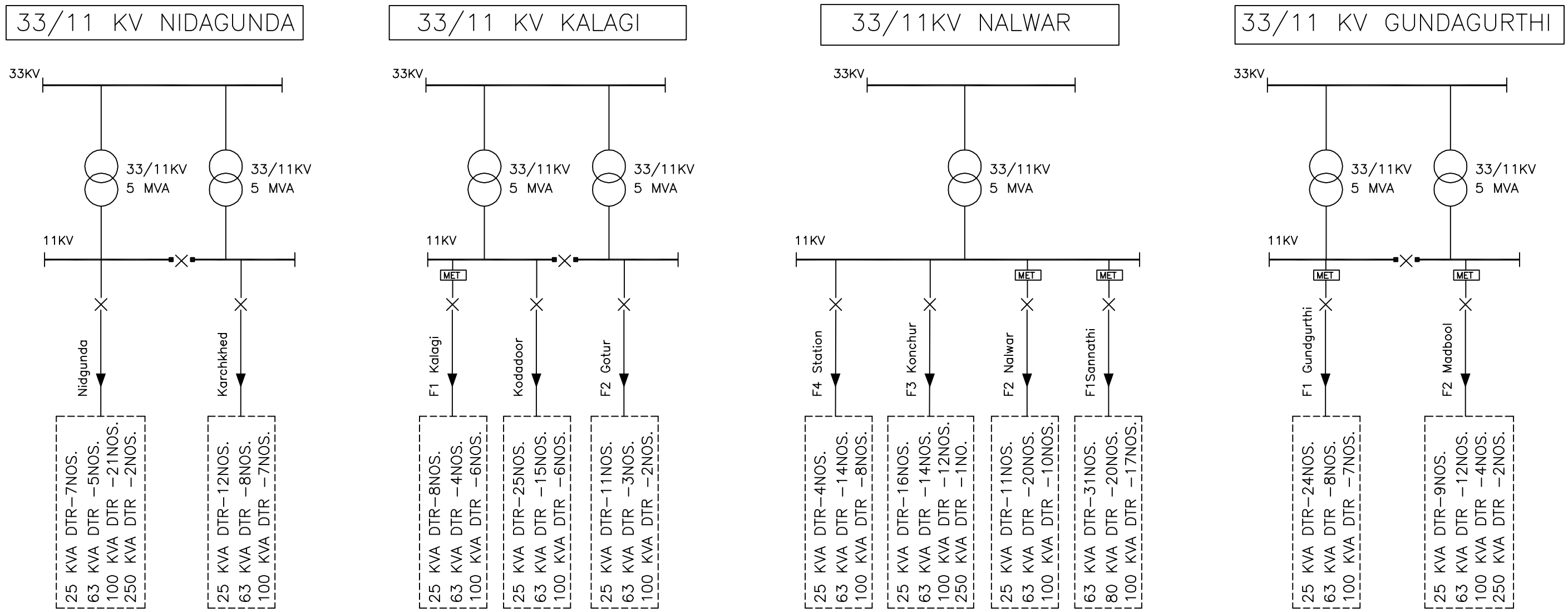

POWER FINANCE CORPORATION. NEW DELHI.

CENTRAL ELECTRICITY REGULATORY COMMISSION. NEW DELHI.

मेकॉन लिमिटेड

MECON LIMITED

NOTE: –

THIS DRAWING PREPARED BASED ON FIRST HAND INFORMATION RECEIVED FROM GESCOM FOR SELECTED CIRCLE AND OUR FIELD VISIT.

REV. NO.	DATE	ZONE	DESCRIPTION	BY	VERIFIED

REVISIONS

REFERENCES | DRG. NO.

THIS DRAWING IS THE PROPERTY OF MECON AND IS ISSUED FOR THE SPECIFIC PROJECT MENTIONED THEREIN. THIS IS NOT TO BE COPIED OR USED FOR OTHER PROJECTS UNLESS EXPRESSLY PERMITTED BY MECON.

SECTION	ELECTRICAL
LOCATION	KOLKATA
DESIGNED	M.K.JAISWARA
DRAWN	M.K.JAISWARA
CHECKED AND VERIFIED	ROBIN DAS
APPROVED	PRADIP ROY

ASSESMENT OF COMPONENT WISE AT&C LOSS FOR KARNATAKA STATE..

SUB–STATION SINLE LINE DIAGRAM WITH 11KV FEEDER DETAILS FOR GULBARGA DIVISION–II UNDER GULBARGA CIRCLE.

SCALE – N.T.S.

DRG.NO.MEC/19.56/Q707/GLB/ID/003

SHEET 3 OF 5 | REV. 0

REV./SEC. | CONCURRED BY

DRG.NO.MEC/19.56/Q707/GLB/ID/003

GULBARGA DIVISION–II

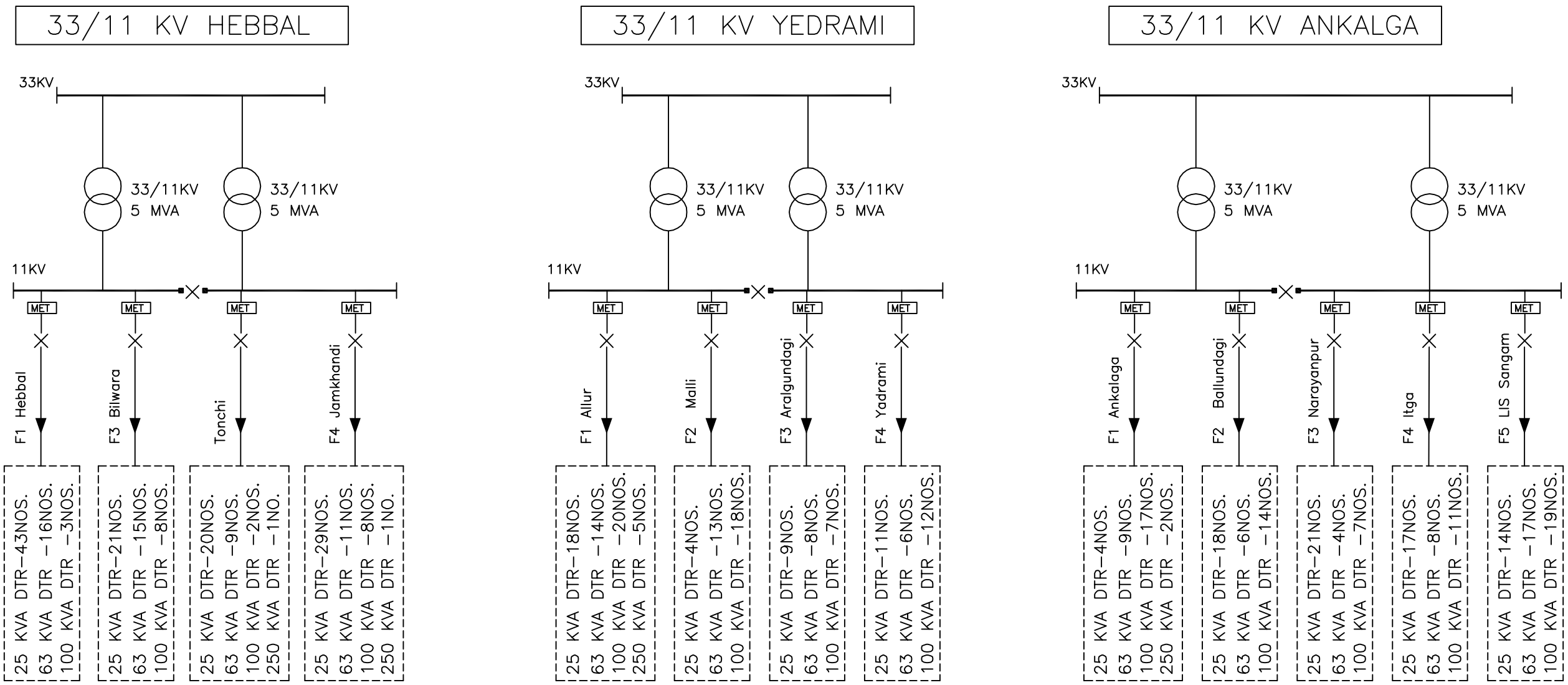

POWER FINANCE CORPORATION. NEW DELHI.

CENTRAL ELECTRICITY REGULATORY COMMISSION. NEW DELHI.

मेकॉन लिमिटेड

MECON LIMITED

NOTE: –

THIS DRAWING PREPARED BASED ON FIRST HAND INFORMATION RECEIVED FROM GESCOM FOR SELECTED CIRCLE AND OUR FIELD VISIT.

REV. NO.	DATE	ZONE	DESCRIPTION	BY	VERIFIED

REVISIONS

REV./SEC. | CONCURRED BY

REFERENCES | DRG. NO.

THIS DRAWING IS THE PROPERTY OF MECON AND IS ISSUED FOR THE SPECIFIC PROJECT MENTIONED THEREIN. THIS IS NOT TO BE COPIED OR USED FOR OTHER PROJECTS UNLESS EXPRESSLY PERMITTED BY MECON.

SECTION	ELECTRICAL
LOCATION	KOLKATA
DESIGNED	M.K.JAISWARA
DRAWN	M.K.JAISWARA
CHECKED AND VERIFIED	ROBIN DAS
APPROVED	PRADIP ROY

ASSESMENT OF COMPONENT WISE AT&C LOSS FOR KARNATAKA STATE.

SUB–STATION SINLE LINE DIAGRAM WITH 11KV FEEDER DETAILS FOR GULBARGA DIVISION–II UNDER GULBARGA CIRCLE.

SCALE – N.T.S.

DRG.NO.MEC/19.56/Q707/GLB/ID/003

SHEET 4 OF 5 | REV. 0

DRG.NO.MEC/19.56/Q707/GLB/ID/003

GULBARGA DIVISION–II

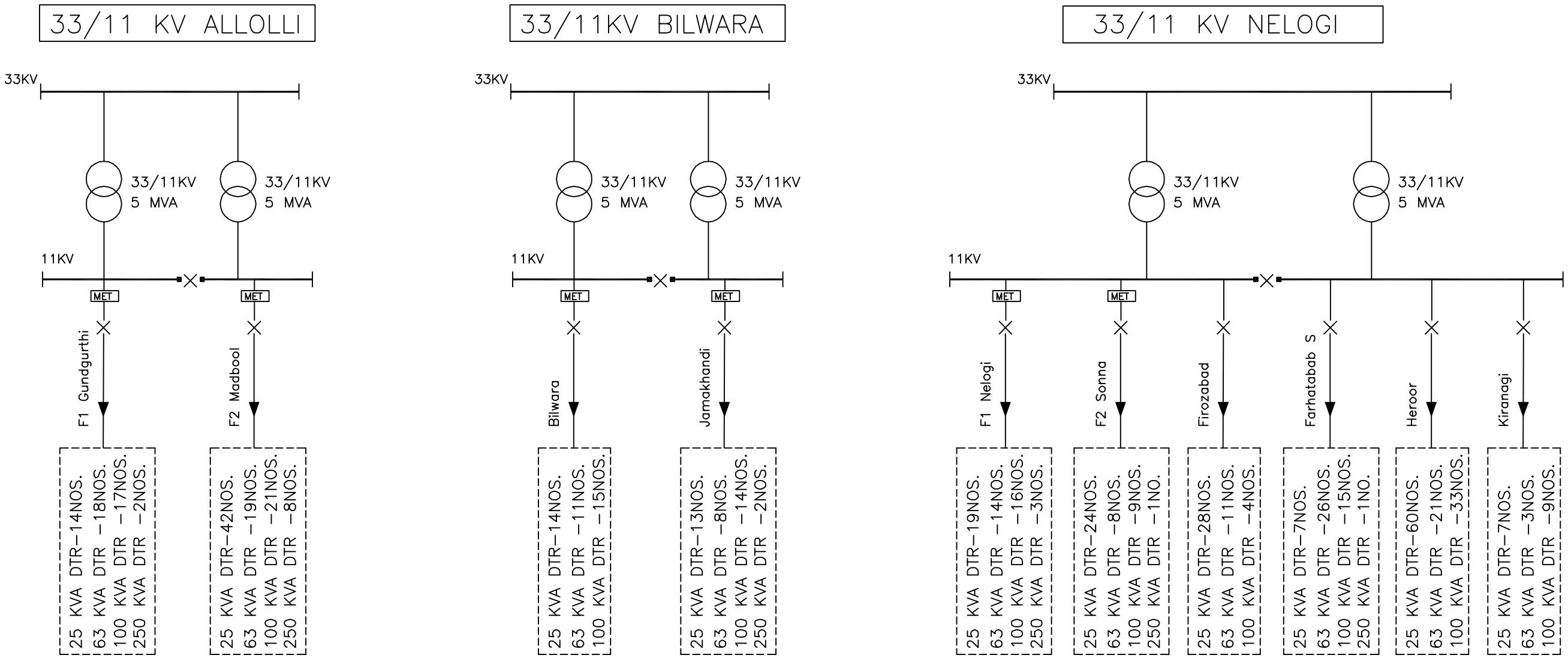

POWER FINANCE CORPORATION. NEW DELHI.

CENTRAL ELECTRICITY REGULATORY COMMISSION. NEW DELHI.

मेकॉन लिमिटेड

MECON LIMITED

ISO 9001 COMPANY

NOTE: –

THIS DRAWING PREPARED BASED ON FIRST HAND INFORMATION RECEIVED FROM GESCOM FOR SELECTED CIRCLE AND OUR FIELD VISIT.

REV. NO.	DATE	ZONE	DESCRIPTION	BY	VERIFIED

REVISIONS

REV./SEC. — CONCURRED BY

REFERENCES	DRG. NO.

THIS DRAWING IS THE PROPERTY OF MECON AND IS ISSUED FOR THE SPECIFIC PROJECT MENTIONED THEREIN. THIS IS NOT TO BE COPIED OR USED FOR OTHER PROJECTS UNLESS EXPRESSLY PERMITTED BY MECON.

SECTION	ELECTRICAL
LOCATION	KOLKATA
DESIGNED	M.K.JAISWARA
DRAWN	M.K.JAISWARA
CHECKED AND VERIFIED	ROBIN DAS
APPROVED	PRADIP ROY

ASSESMENT OF COMPONENT WISE AT&C LOSS FOR KARNATAKA STATE.

SUB–STATION SINLE LINE DIAGRAM WITH 11KV FEEDER DETAILS FOR GULBARGA DIVISION–II UNDER GULBARGA CIRCLE.

SCALE – N.T.S.

DRG.NO.MEC/19.56/Q707/GLB/ID/003

SHEET 5 OF 5 — REV. 0

DRAWING DESCRIPTION : SUB-STATION SLD WITH 11KV FEEDER DETAILS FOR YADGIR DIVISION UNDER GULBARGA CIRCLE.

DRAWING NO. : MEC/19.56/Q707/GLB/ID/004

NO. OF SHEETS : 07

DRG.NO.MEC/19.56/Q707/GLB/ID/004

YADGIR DIVISION

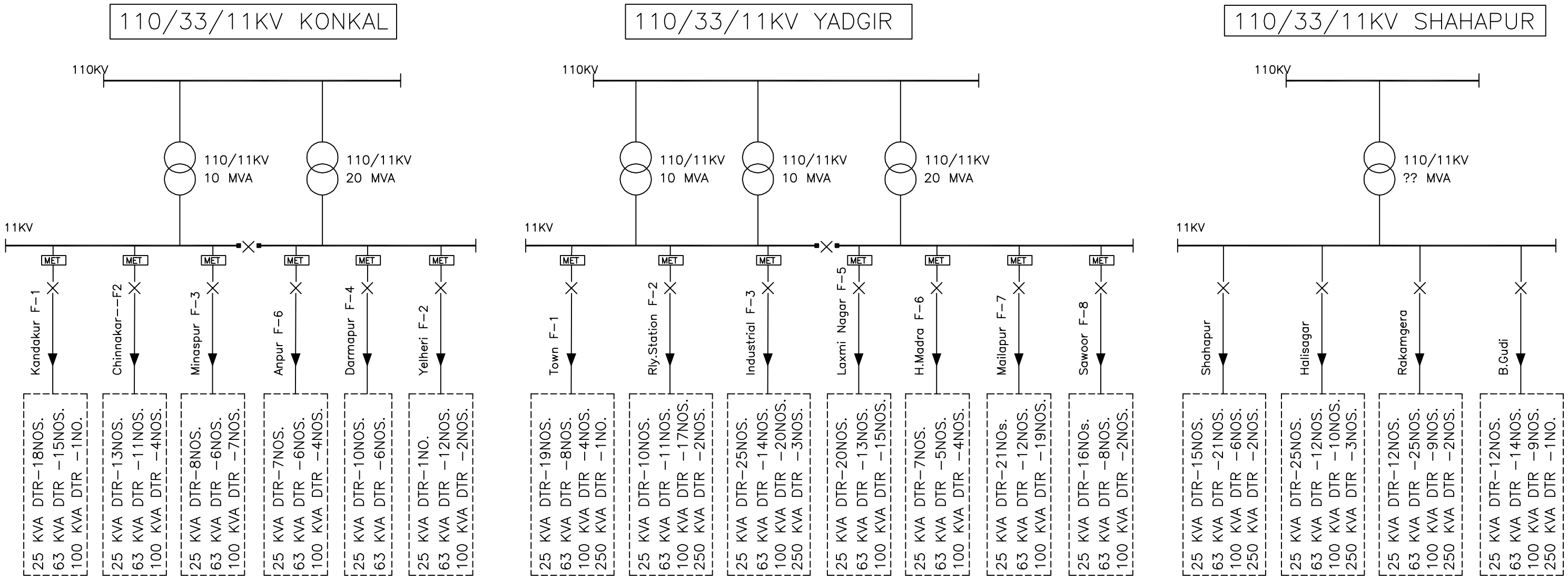

POWER FINANCE CORPORATION. NEW DELHI.

CENTRAL ELECTRICITY REGULATORY COMMISSION. NEW DELHI.

मेकॉन लिमिटेड

MECON LIMITED

NOTE: –

THIS DRAWING PREPARED BASED ON FIRST HAND INFORMATION RECEIVED FROM GESCOM FOR SELECTED CIRCLE AND OUR FIELD VISIT.

REV. NO.	DATE	ZONE	DESCRIPTION	BY	VERIFIED

REVISIONS

REFERENCES | DRG. NO.

THIS DRAWING IS THE PROPERTY OF MECON AND IS ISSUED FOR THE SPECIFIC PROJECT MENTIONED THEREIN. THIS IS NOT TO BE COPIED OR USED FOR OTHER PROJECTS UNLESS EXPRESSLY PERMITTED BY MECON.

REV./SEC. | CONCURRED BY

SECTION	ELECTRICAL
LOCATION	KOLKATA
DESIGNED	M.K.JAISWARA
DRAWN	M.K.JAISWARA
CHECKED AND VERIFIED	ROBIN DAS
APPROVED	PRADIP ROY

ASSESMENT OF COMPONENT WISE AT&C LOSS FOR KARNATAKA STATE..

SUB-STATION SINLE LINE DIAGRAM WITH 11KV FEEDER DETAILS FOR YADGIR DIVISION UNDER GULBARGA CIRCLE.

SCALE – N.T.S.

DRG.NO.MEC/19.56/Q707/GLB/ID/004

SHEET 1 OF 7 | REV. 0

DRG.NO.MEC/19.56/Q707/GLB/ID/004

YADGIR DIVISION

220/110/33/11KV HATTIGUDUR

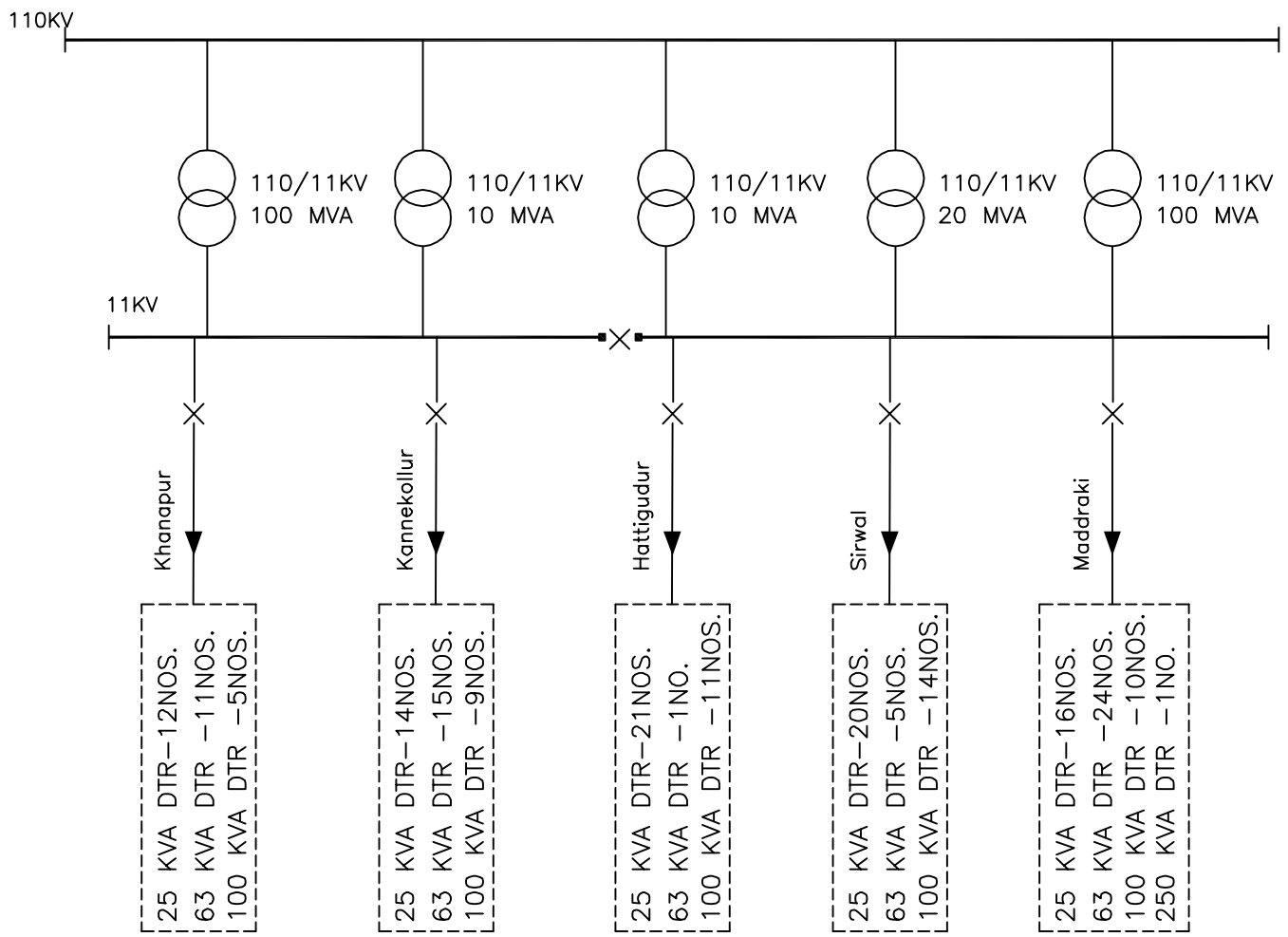

110/33/11KV SHORAPUR

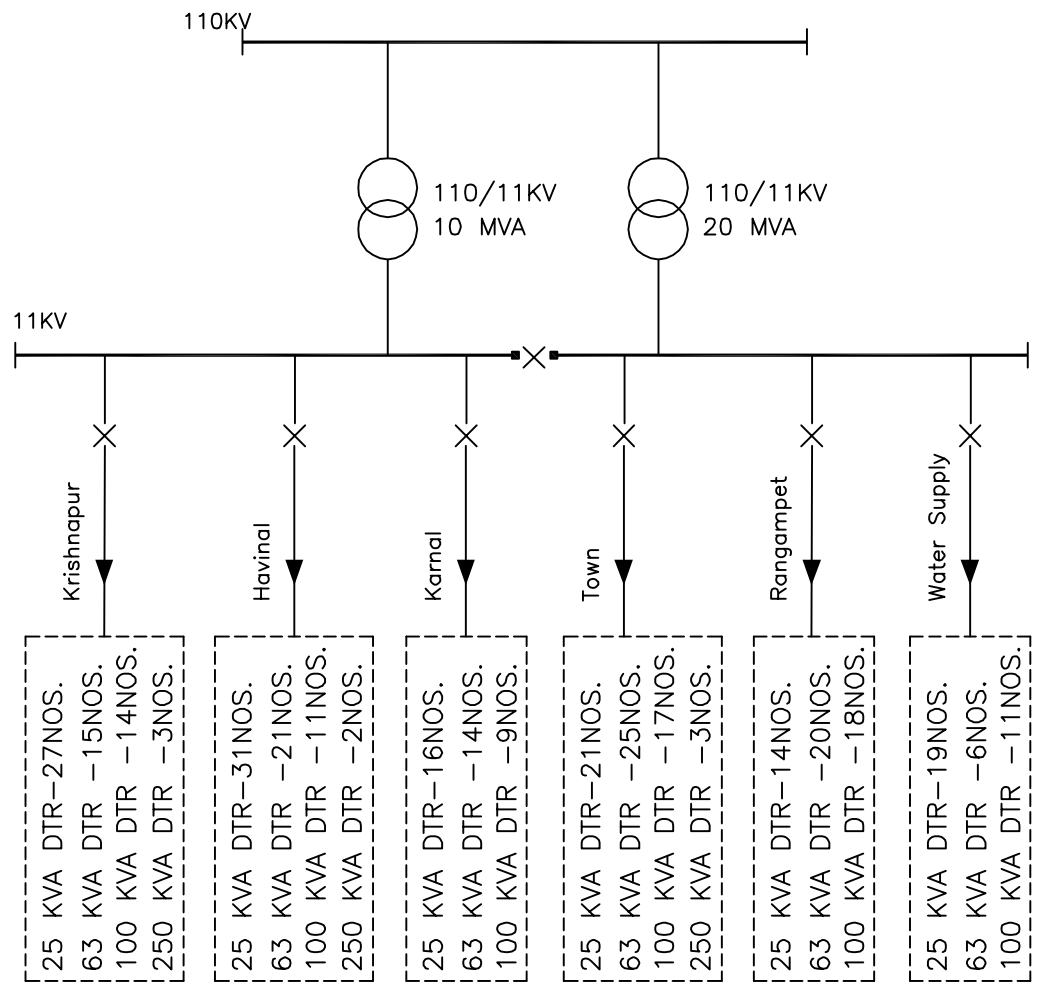

POWER FINANCE CORPORATION. NEW DELHI.

CENTRAL ELECTRICITY REGULATORY COMMISSION. NEW DELHI.

मेकॉन लिमिटेड

MECON LIMITED

NOTE: –

THIS DRAWING PREPARED BASED ON FIRST HAND INFORMATION RECEIVED FROM GESCOM FOR SELECTED CIRCLE AND OUR FIELD VISIT.

REV. NO.	DATE	ZONE	DESCRIPTION	BY	VERIFIED

REVISIONS

REFERENCES | DRG. NO.

THIS DRAWING IS THE PROPERTY OF MECON AND IS ISSUED FOR THE SPECIFIC PROJECT MENTIONED THEREIN. THIS IS NOT TO BE COPIED OR USED FOR OTHER PROJECTS UNLESS EXPRESSLY PERMITTED BY MECON.

SECTION	ELECTRICAL
LOCATION	KOLKATA
DESIGNED	M.K.JAISWARA
DRAWN	M.K.JAISWARA
CHECKED AND VERIFIED	ROBIN DAS
APPROVED	PRADIP ROY

ASSESMENT OF COMPONENT WISE AT&C LOSS FOR KARNATAKA STATE..

SUB-STATION SINLE LINE DIAGRAM WITH 11KV FEEDER DETAILS FOR YADGIR DIVISION UNDER GULBARGA CIRCLE.

SCALE – N.T.S.

DRG.NO.MEC/19.56/Q707/GLB/ID/004

SHEET 2 OF 7 | REV. 0

CONCURRED BY

REV./SEC.

DRG.NO.MEC/19.56/Q707/GLB/ID/004

YADGIR DIVISION

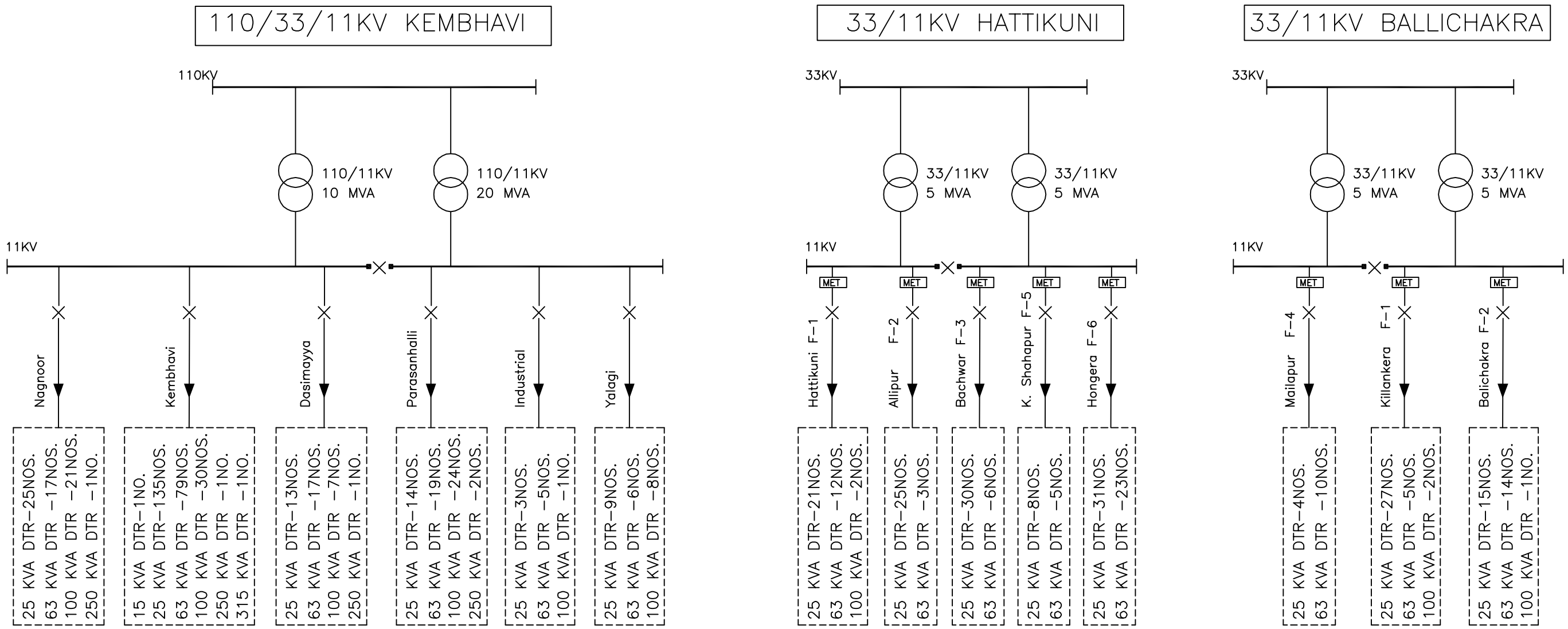

POWER FINANCE CORPORATION. NEW DELHI.

CENTRAL ELECTRICITY REGULATORY COMMISSION. NEW DELHI.

मेकॉन लिमिटेड

MECON LIMITED

NOTE: –

THIS DRAWING PREPARED BASED ON FIRST HAND INFORMATION RECEIVED FROM GESCOM FOR SELECTED CIRCLE AND OUR FIELD VISIT.

REV. NO.	DATE	ZONE	DESCRIPTION	BY	VERIFIED

REVISIONS

REV./SEC. — CONCURRED BY

REFERENCES — DRG. NO.

THIS DRAWING IS THE PROPERTY OF MECON AND IS ISSUED FOR THE SPECIFIC PROJECT MENTIONED THEREIN. THIS IS NOT TO BE COPIED OR USED FOR OTHER PROJECTS UNLESS EXPRESSLY PERMITTED BY MECON.

SECTION	ELECTRICAL
LOCATION	KOLKATA
DESIGNED	M.K.JAISWARA
DRAWN	M.K.JAISWARA
CHECKED AND VERIFIED	ROBIN DAS
APPROVED	PRADIP ROY

ASSESMENT OF COMPONENT WISE AT&C LOSS FOR KARNATAKA STATE..

SUB-STATION SINLE LINE DIAGRAM WITH 11KV FEEDER DETAILS FOR YADGIR DIVISION UNDER GULBARGA CIRCLE.

SCALE – N.T.S.

DRG.NO.MEC/19.56/Q707/GLB/ID/004

SHEET 3 OF 7 — REV. 0

DRG.NO.MEC/19.56/Q707/GLB/ID/004

YADGIR DIVISION

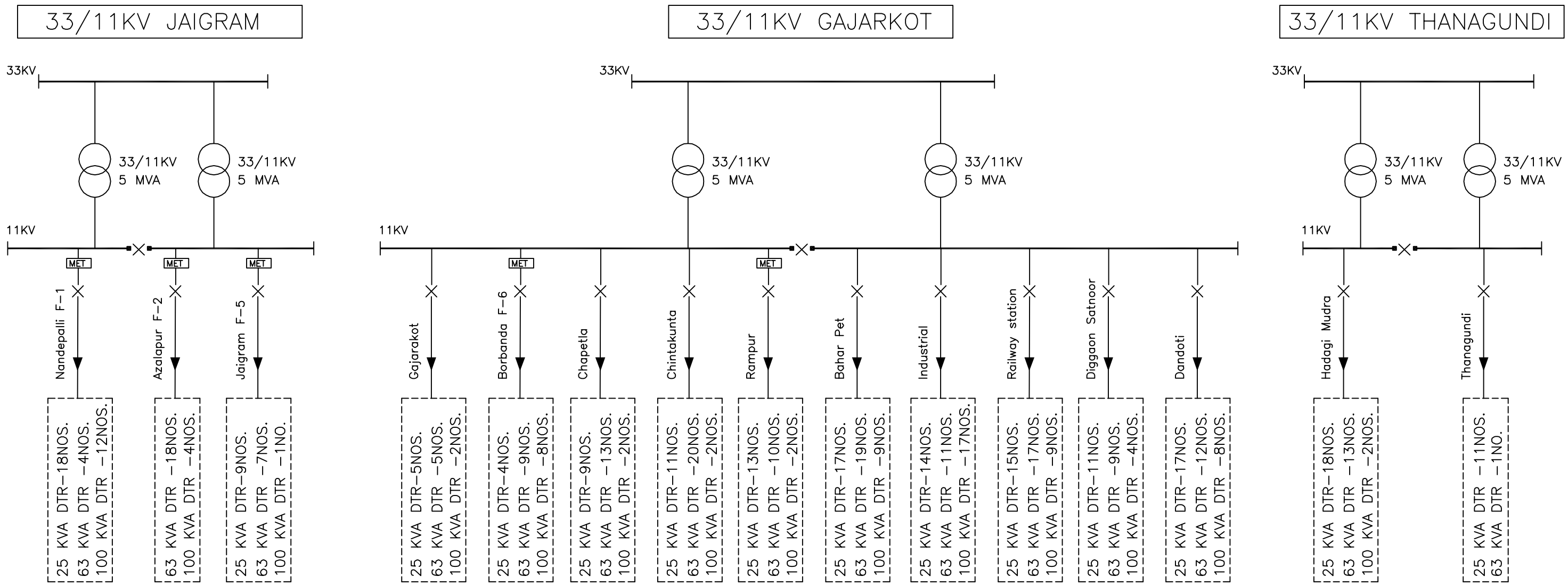

POWER FINANCE CORPORATION. NEW DELHI.

CENTRAL ELECTRICITY REGULATORY COMMISSION. NEW DELHI.

मेकॉन लिमिटेड

MECON LIMITED

NOTE: –

THIS DRAWING PREPARED BASED ON FIRST HAND INFORMATION RECEIVED FROM GESCOM FOR SELECTED CIRCLE AND OUR FIELD VISIT.

REV. NO.	DATE	ZONE	DESCRIPTION	BY	VERIFIED

REVISIONS

REV./SEC. — CONCURRED BY

REFERENCES	DRG. NO.

THIS DRAWING IS THE PROPERTY OF MECON AND IS ISSUED FOR THE SPECIFIC PROJECT MENTIONED THEREIN. THIS IS NOT TO BE COPIED OR USED FOR OTHER PROJECTS UNLESS EXPRESSLY PERMITTED BY MECON.

SECTION	ELECTRICAL
LOCATION	KOLKATA
DESIGNED	M.K.JAISWARA
DRAWN	M.K.JAISWARA
CHECKED AND VERIFIED	ROBIN DAS
APPROVED	PRADIP ROY

ASSESMENT OF COMPONENT WISE AT&C LOSS FOR KARNATAKA STATE..

SUB-STATION SINLE LINE DIAGRAM WITH 11KV FEEDER DETAILS FOR YADGIR DIVISION UNDER GULBARGA CIRCLE.

SCALE – N.T.S.

DRG.NO.MEC/19.56/Q707/GLB/ID/004

SHEET 4 OF 7 REV. 0

DRG.NO.MEC/19.56/Q707/GLB/ID/004

YADGIR DIVISION

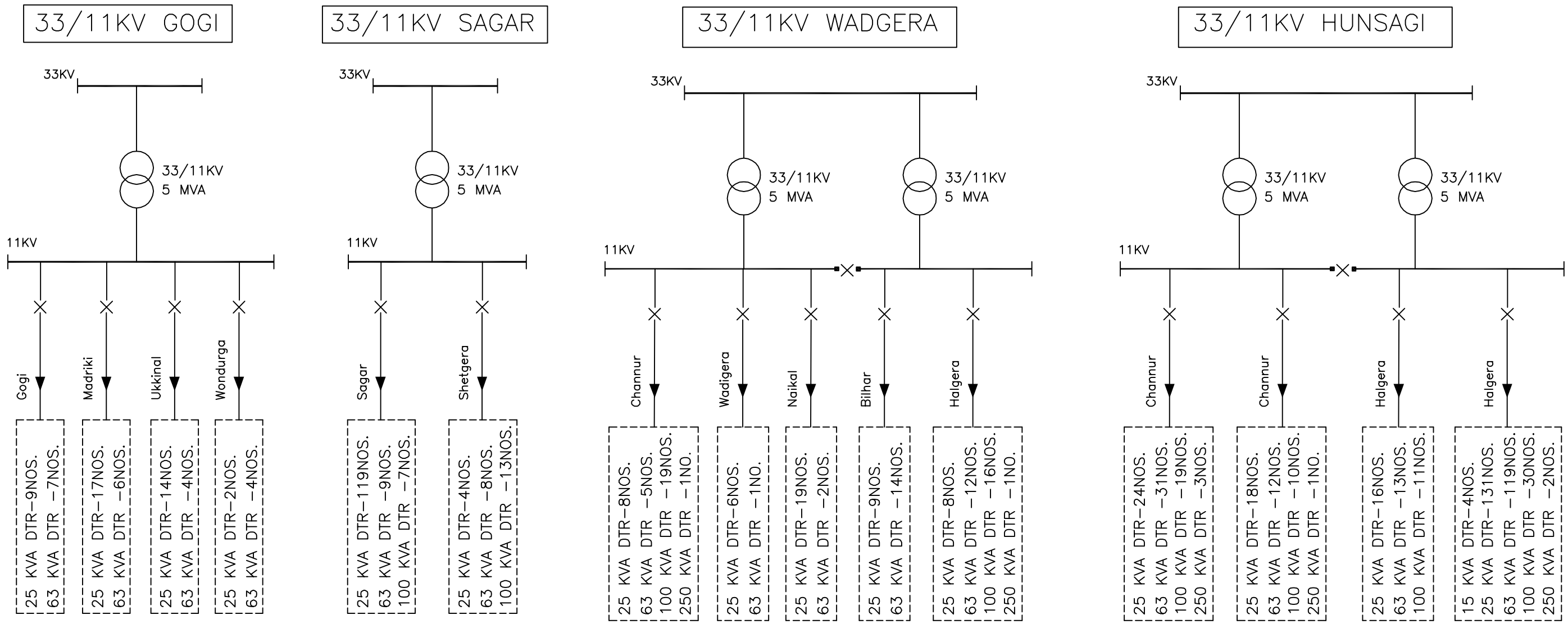

POWER FINANCE CORPORATION. NEW DELHI.

CENTRAL ELECTRICITY REGULATORY COMMISSION. NEW DELHI.

मेकॉन लिमिटेड

MECON LIMITED

ISO 9001 COMPANY

NOTE: –

THIS DRAWING PREPARED BASED ON FIRST HAND INFORMATION RECEIVED FROM GESCOM FOR SELECTED CIRCLE AND OUR FIELD VISIT.

REV. NO.	DATE	ZONE	DESCRIPTION	BY	VERIFIED

REVISIONS

REFERENCES | DRG. NO.

THIS DRAWING IS THE PROPERTY OF MECON AND IS ISSUED FOR THE SPECIFIC PROJECT MENTIONED THEREIN. THIS IS NOT TO BE COPIED OR USED FOR OTHER PROJECTS UNLESS EXPRESSLY PERMITTED BY MECON.

SECTION	ELECTRICAL
LOCATION	KOLKATA
DESIGNED	M.K.JAISWARA
DRAWN	M.K.JAISWARA
CHECKED AND VERIFIED	ROBIN DAS
APPROVED	PRADIP ROY

ASSESMENT OF COMPONENT WISE AT&C LOSS FOR KARNATAKA STATE..

SUB–STATION SINLE LINE DIAGRAM WITH 11KV FEEDER DETAILS FOR YADGIR DIVISION UNDER GULBARGA CIRCLE.

SCALE – N.T.S.

DRG.NO.MEC/19.56/Q707/GLB/ID/004

SHEET 5 OF 7

REV. 0

CONCURRED BY

REV./SEC.

DRG.NO.MEC/19.56/Q707/GLB/ID/004

YADGIR DIVISION

33/11KV KAKKERA

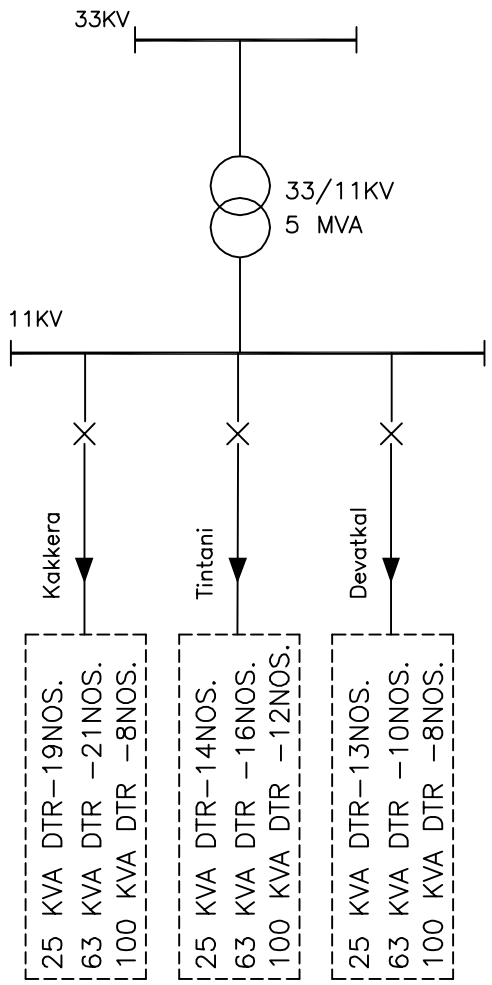

33/11KV BENDEGUMBLI

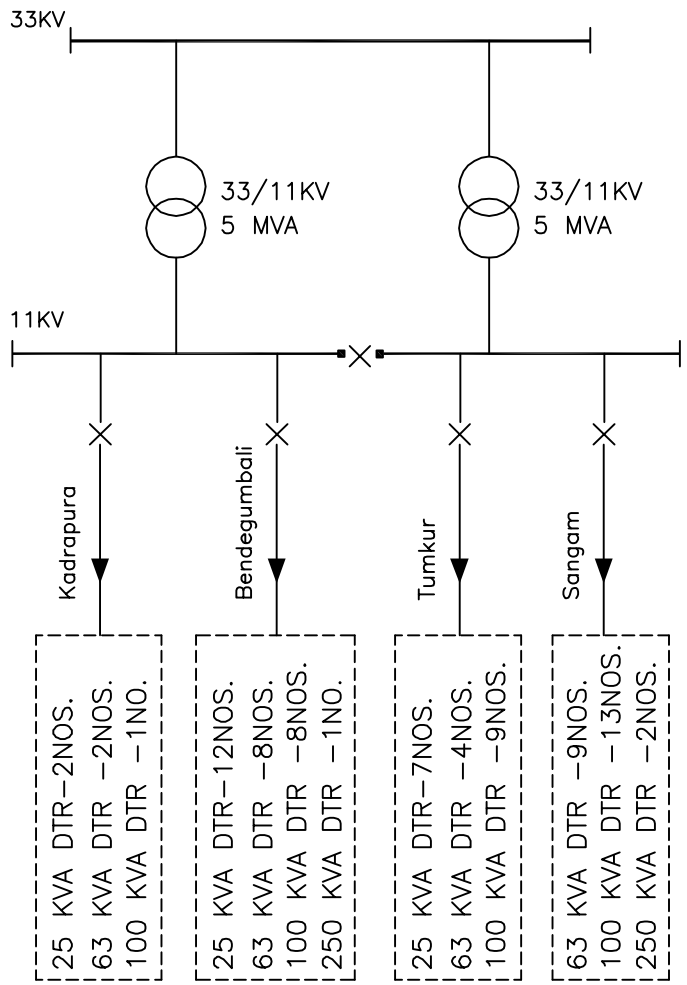

33/11KV GURMITKAL

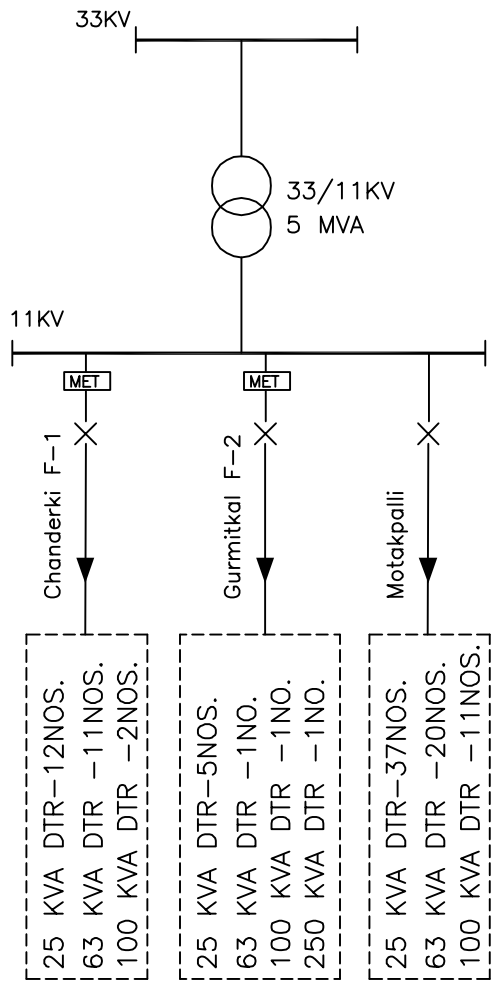

POWER FINANCE CORPORATION. NEW DELHI.

CENTRAL ELECTRICITY REGULATORY COMMISSION. NEW DELHI.

मेकॉन लिमिटेड

MECON LIMITED

NOTE: –

THIS DRAWING PREPARED BASED ON FIRST HAND INFORMATION RECEIVED FROM GESCOM FOR SELECTED CIRCLE AND OUR FIELD VISIT.

REV. NO.	DATE	ZONE	DESCRIPTION	BY	VERIFIED

REVISIONS

REFERENCES | DRG. NO.

THIS DRAWING IS THE PROPERTY OF MECON AND IS ISSUED FOR THE SPECIFIC PROJECT MENTIONED THEREIN. THIS IS NOT TO BE COPIED OR USED FOR OTHER PROJECTS UNLESS EXPRESSLY PERMITTED BY MECON.

SECTION	ELECTRICAL
LOCATION	KOLKATA
DESIGNED	M.K.JAISWARA
DRAWN	M.K.JAISWARA
CHECKED AND VERIFIED	ROBIN DAS
APPROVED	PRADIP ROY

ASSESMENT OF COMPONENT WISE AT&C LOSS FOR KARNATAKA STATE..

SUB–STATION SINLE LINE DIAGRAM WITH 11KV FEEDER DETAILS FOR YADGIR DIVISION UNDER GULBARGA CIRCLE.

SCALE – N.T.S.

DRG.NO.MEC/19.56/Q707/GLB/ID/004

SHEET 6 OF 7

REV. 0

CONCURRED BY

REV./SEC.

DRG.NO.MEC/19.56/Q707/GLB/ID/004

YADGIR DIVISION

33/11KV SAIDAPUR

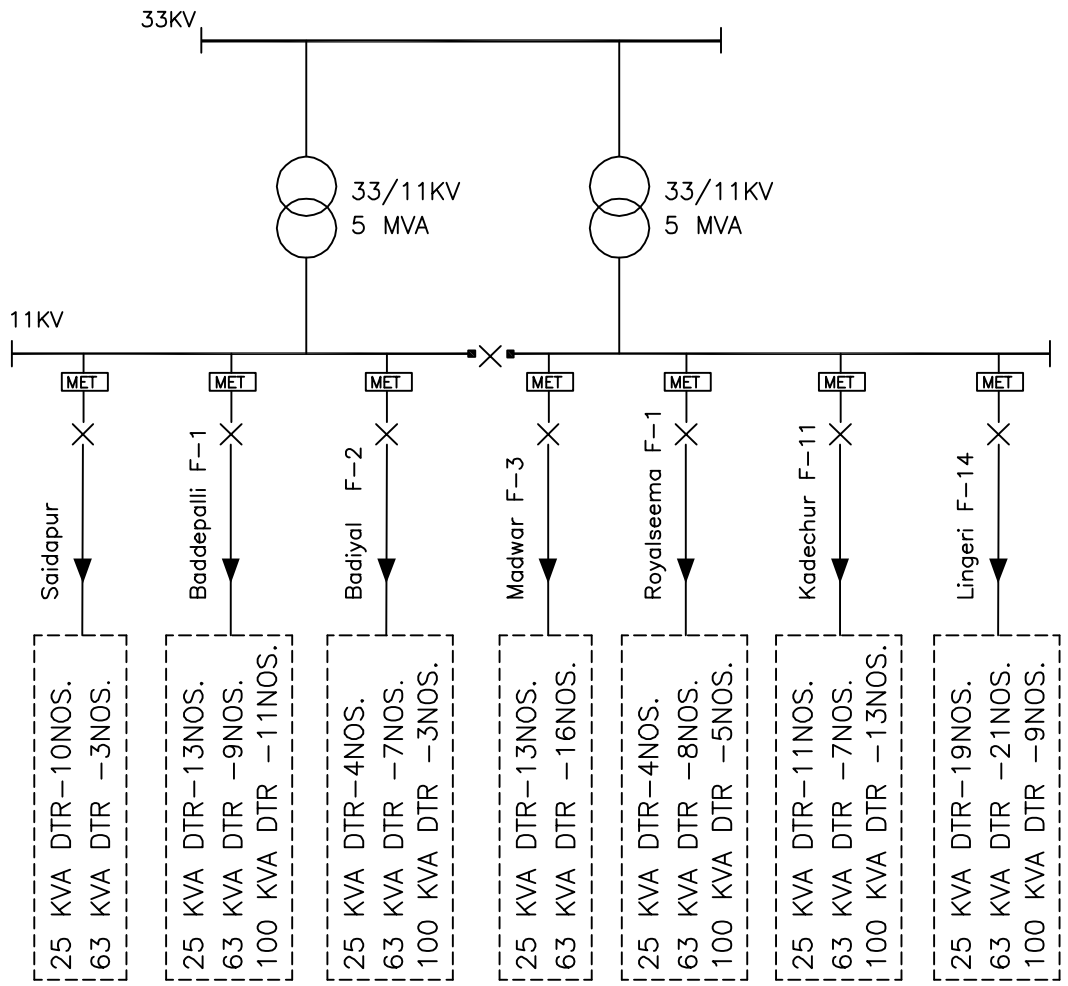

33/11KV PET–AMMAPUR

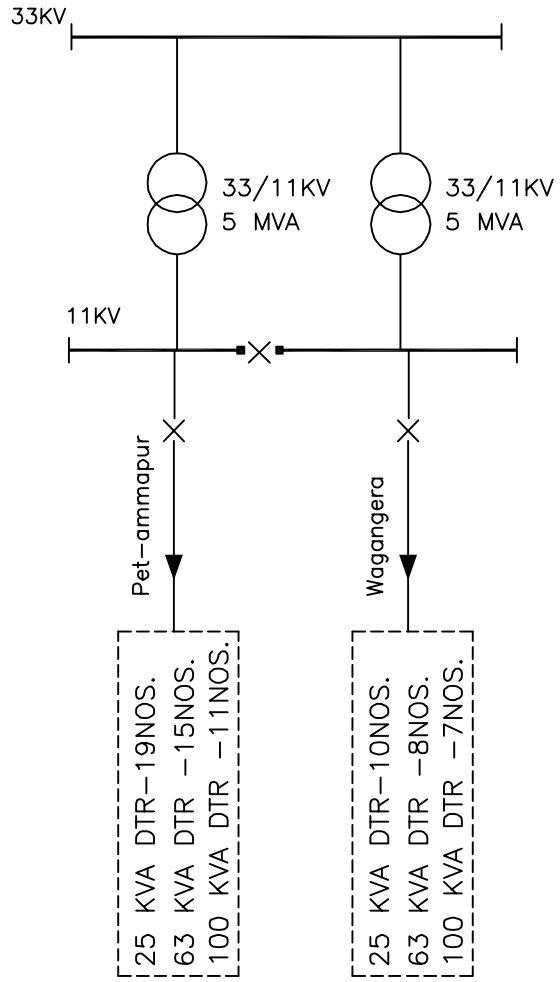

POWER FINANCE CORPORATION. NEW DELHI.

CENTRAL ELECTRICITY REGULATORY COMMISSION. NEW DELHI.

मेकॉन लिमिटेड

MECON LIMITED

ISO 9001 COMPANY

NOTE: –

THIS DRAWING PREPARED BASED ON FIRST HAND INFORMATION RECEIVED FROM GESCOM FOR SELECTED CIRCLE AND OUR FIELD VISIT.

REV. NO.	DATE	ZONE	DESCRIPTION	BY	VERIFIED
			REVISIONS		

REV./SEC. — CONCURRED BY

REFERENCES — DRG. NO.

THIS DRAWING IS THE PROPERTY OF MECON AND IS ISSUED FOR THE SPECIFIC PROJECT MENTIONED THEREIN. THIS IS NOT TO BE COPIED OR USED FOR OTHER PROJECTS UNLESS EXPRESSLY PERMITTED BY MECON.

SECTION	ELECTRICAL
LOCATION	KOLKATA
DESIGNED	M.K.JAISWARA
DRAWN	M.K.JAISWARA
CHECKED AND VERIFIED	ROBIN DAS
APPROVED	PRADIP ROY

ASSESMENT OF COMPONENT WISE AT&C LOSS FOR KARNATAKA STATE..

SUB–STATION SINLE LINE DIAGRAM WITH 11KV FEEDER DETAILS FOR YADGIR DIVISION UNDER GULBARGA CIRCLE.

SCALE – N.T.S.

DRG.NO.MEC/19.56/Q707/GLB/ID/004

SHEET 7 OF 7 — REV. 0

DRAWING DESCRIPTION : SUB-STATION SLD WITH 11KV FEEDER DETAILS FOR SEDAM DIVISION UNDER GULBARGA CIRCLE.

DRAWING NO. : MEC/19.56/Q707/GLB/ID/005

NO. OF SHEETS : 04

DRG.NO.MEC/19.56/Q707/GLB/ID/005

SEDAM DIVISION

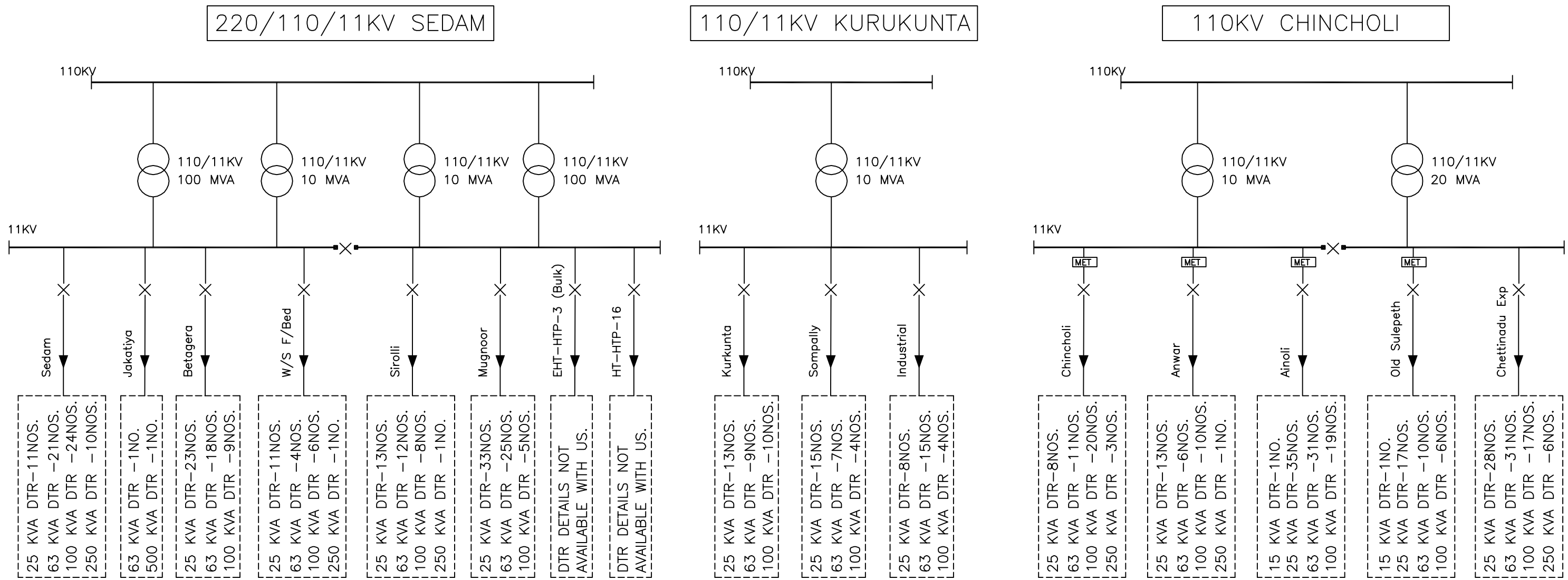

POWER FINANCE CORPORATION. NEW DELHI.

CENTRAL ELECTRICITY REGULATORY COMMISSION. NEW DELHI.

मेकॉन लिमिटेड

MECON LIMITED

NOTE: –

THIS DRAWING PREPARED BASED ON FIRST HAND INFORMATION RECEIVED FROM GESCOM FOR SELECTED CIRCLE AND OUR FIELD VISIT.

REV. NO.	DATE	ZONE	DESCRIPTION	BY	VERIFIED

REVISIONS

REV./SEC. — CONCURRED BY

REFERENCES	DRG. NO.

THIS DRAWING IS THE PROPERTY OF MECON AND IS ISSUED FOR THE SPECIFIC PROJECT MENTIONED THEREIN. THIS IS NOT TO BE COPIED OR USED FOR OTHER PROJECTS UNLESS EXPRESSLY PERMITTED BY MECON.

SECTION	ELECTRICAL
LOCATION	KOLKATA
DESIGNED	M.K.JAISWARA
DRAWN	M.K.JAISWARA
CHECKED AND VERIFIED	ROBIN DAS
APPROVED	PRADIP ROY

ASSESMENT OF COMPONENT WISE AT&C LOSS FOR KARNATAKA STATE..

SUB-STATION SINLE LINE DIAGRAM WITH 11KV FEEDER DETAILS FOR SEDAM DIVISION UNDER GULBARGA CIRCLE.

SCALE – N.T.S.

DRG.NO.MEC/19.56/Q707/GLB/ID/005

SHEET 1 OF 4 — REV. 0

DRG.NO.MEC/19.56/Q707/GLB/ID/005

SEDAM DIVISION

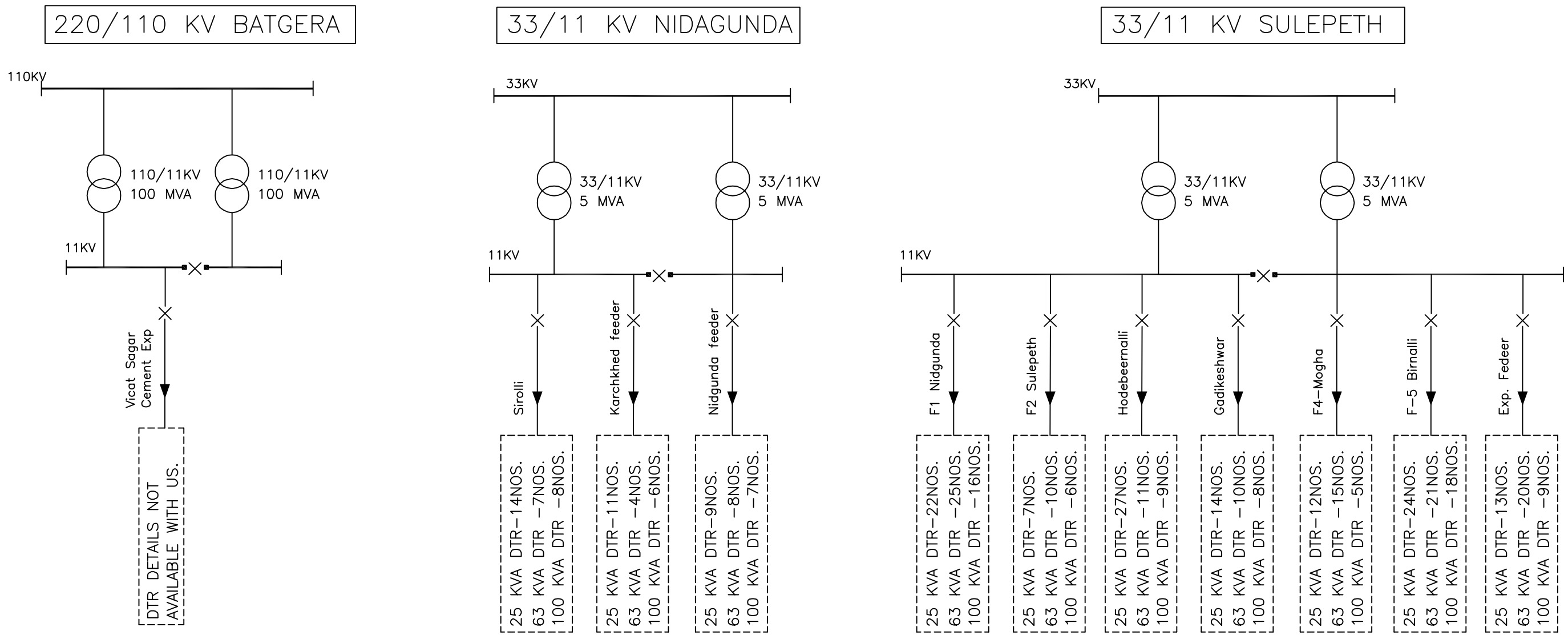

POWER FINANCE CORPORATION. NEW DELHI.

CENTRAL ELECTRICITY REGULATORY COMMISSION. NEW DELHI.

मेकॉन लिमिटेड

MECON LIMITED

NOTE: –

THIS DRAWING PREPARED BASED ON FIRST HAND INFORMATION RECEIVED FROM GESCOM FOR SELECTED CIRCLE AND OUR FIELD VISIT.

REV. NO.	DATE	ZONE	DESCRIPTION	BY	VERIFIED

REVISIONS

REFERENCES | DRG. NO.

THIS DRAWING IS THE PROPERTY OF MECON AND IS ISSUED FOR THE SPECIFIC PROJECT MENTIONED THEREIN. THIS IS NOT TO BE COPIED OR USED FOR OTHER PROJECTS UNLESS EXPRESSLY PERMITTED BY MECON.

SECTION	ELECTRICAL
LOCATION	KOLKATA
DESIGNED	M.K.JAISWARA
DRAWN	M.K.JAISWARA
CHECKED AND VERIFIED	ROBIN DAS
APPROVED	PRADIP ROY

ASSESMENT OF COMPONENT WISE AT&C LOSS FOR KARNATAKA STATE..

SUB-STATION SINLE LINE DIAGRAM WITH 11KV FEEDER DETAILS FOR SEDAM DIVISION UNDER GULBARGA CIRCLE.

SCALE – N.T.S.

DRG.NO.MEC/19.56/Q707/GLB/ID/005

SHEET 2 OF 4

REV. 0

REV./SEC. | CONCURRED BY

DRG.NO.MEC/19.56/Q707/GLB/ID/005

SEDAM DIVISION

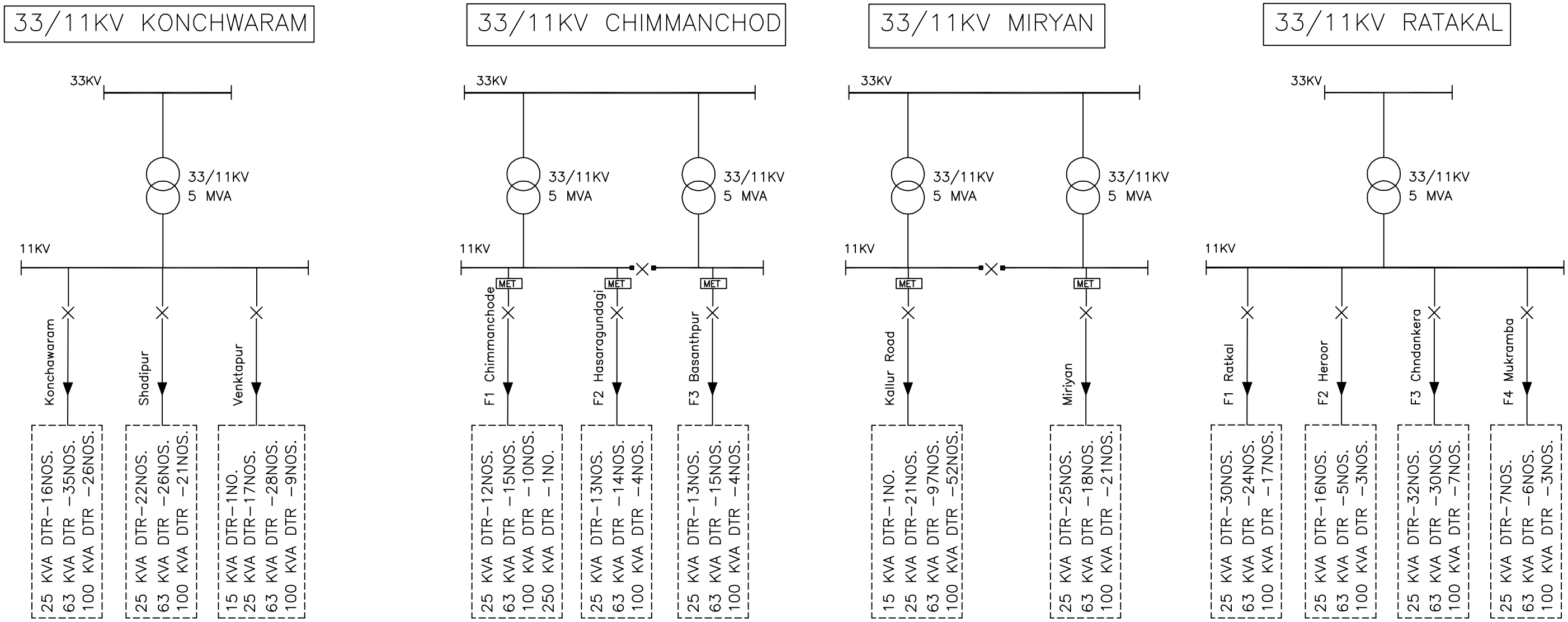

POWER FINANCE CORPORATION. NEW DELHI.

CENTRAL ELECTRICITY REGULATORY COMMISSION. NEW DELHI.

मेकॉन लिमिटेड

MECON LIMITED

ISO 9001 COMPANY

NOTE: –

THIS DRAWING PREPARED BASED ON FIRST HAND INFORMATION RECEIVED FROM GESCOM FOR SELECTED CIRCLE AND OUR FIELD VISIT.

REV. NO.	DATE	ZONE	DESCRIPTION	BY	VERIFIED
			REVISIONS		

REV./SEC. — CONCURRED BY

REFERENCES — DRG. NO.

THIS DRAWING IS THE PROPERTY OF MECON AND IS ISSUED FOR THE SPECIFIC PROJECT MENTIONED THEREIN. THIS IS NOT TO BE COPIED OR USED FOR OTHER PROJECTS UNLESS EXPRESSLY PERMITTED BY MECON.

SECTION	ELECTRICAL
LOCATION	KOLKATA
DESIGNED	M.K.JAISWARA
DRAWN	M.K.JAISWARA
CHECKED AND VERIFIED	ROBIN DAS
APPROVED	PRADIP ROY

ASSESMENT OF COMPONENT WISE AT&C LOSS FOR KARNATAKA STATE..

SUB-STATION SINLE LINE DIAGRAM WITH 11KV FEEDER DETAILS FOR SEDAM DIVISION UNDER GULBARGA CIRCLE.

SCALE – N.T.S.

DRG.NO.MEC/19.56/Q707/GLB/ID/005

SHEET 3 OF 4 — REV. 0

DRG.NO.MEC/19.56/Q707/GLB/ID/005

SEDAM DIVISION

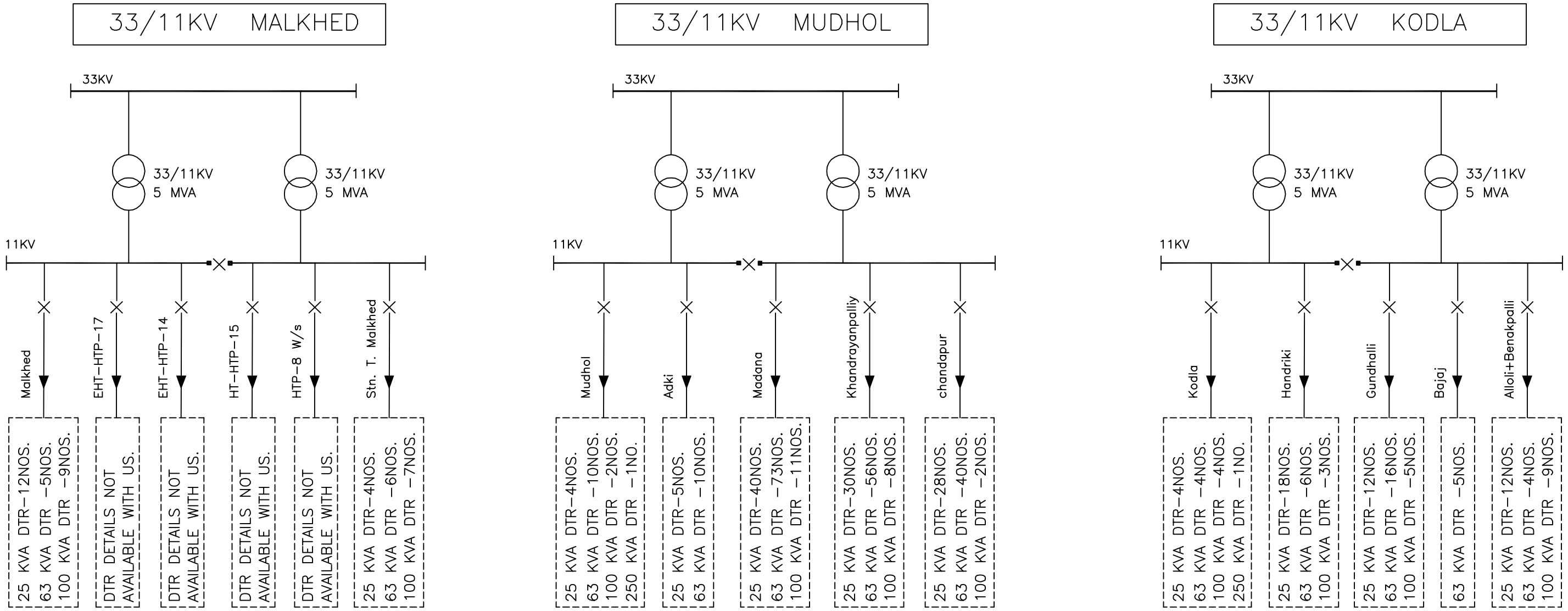

POWER FINANCE CORPORATION. NEW DELHI.

CENTRAL ELECTRICITY REGULATORY COMMISSION. NEW DELHI.

मेकॉन लिमिटेड

MECON LIMITED

NOTE: –

THIS DRAWING PREPARED BASED ON FIRST HAND INFORMATION RECEIVED FROM GESCOM FOR SELECTED CIRCLE AND OUR FIELD VISIT.

REV. NO.	DATE	ZONE	DESCRIPTION	BY	VERIFIED

REVISIONS

REV./SEC. — CONCURRED BY

REFERENCES — DRG. NO.

THIS DRAWING IS THE PROPERTY OF MECON AND IS ISSUED FOR THE SPECIFIC PROJECT MENTIONED THEREIN. THIS IS NOT TO BE COPIED OR USED FOR OTHER PROJECTS UNLESS EXPRESSLY PERMITTED BY MECON.

SECTION	ELECTRICAL
LOCATION	KOLKATA
DESIGNED	M.K.JAISWARA
DRAWN	M.K.JAISWARA
CHECKED AND VERIFIED	ROBIN DAS
APPROVED	PRADIP ROY

ASSESMENT OF COMPONENT WISE AT&C LOSS FOR KARNATAKA STATE..

SUB–STATION SINLE LINE DIAGRAM WITH 11KV FEEDER DETAILS FOR SEDAM DIVISION UNDER GULBARGA CIRCLE.

SCALE – N.T.S.

DRG.NO.MEC/19.56/Q707/GLB/ID/005

SHEET 4 OF 4 — REV. 0

KARNATAKA STATE AT A GLANCE

COMPONENT-WISE AT&C LOSS								
NAME OF THE CIRCLE/ STATE	11 kV INPUT ENERGY (MU)	% OF TECHNICAL LOSS DUE TO		% OF COMMERCIAL LOSS DUE TO				% OF AT&C LOSS
		11 kV LINE	LT LINE	PILFERAGE/ THEFT	DEFECTIVE METERS	UNMETERED/ AVERAGE BILLING	UNREALIZED REVENUE	
	(a)	(b)	(c)	(d)	(e)	(f)	(g)	
BANGALORE SOUTH	423.900	4.778	5.506	2.006	0.046	0.002	2.758	15.096
HUBLI	113.809	5.83	9.502	8.143	0.050	3.098	0.233	26.858
GULBERGA	123.305	5.101	8.664	5.528	0.129	6.071	6.224	31.737
CHIKODI	116.428	5.259	5.825	7.506	0.058	3.875	2.428	24.951
KARNATAKA STATE	**3655.100**	**5.060**	**6.640**	**4.290**	**0.060**	**1.990**	**2.890**	**20.940**

PIE DIAGRAM FOR % OF COMPONENT WISE AT&C LOSSES

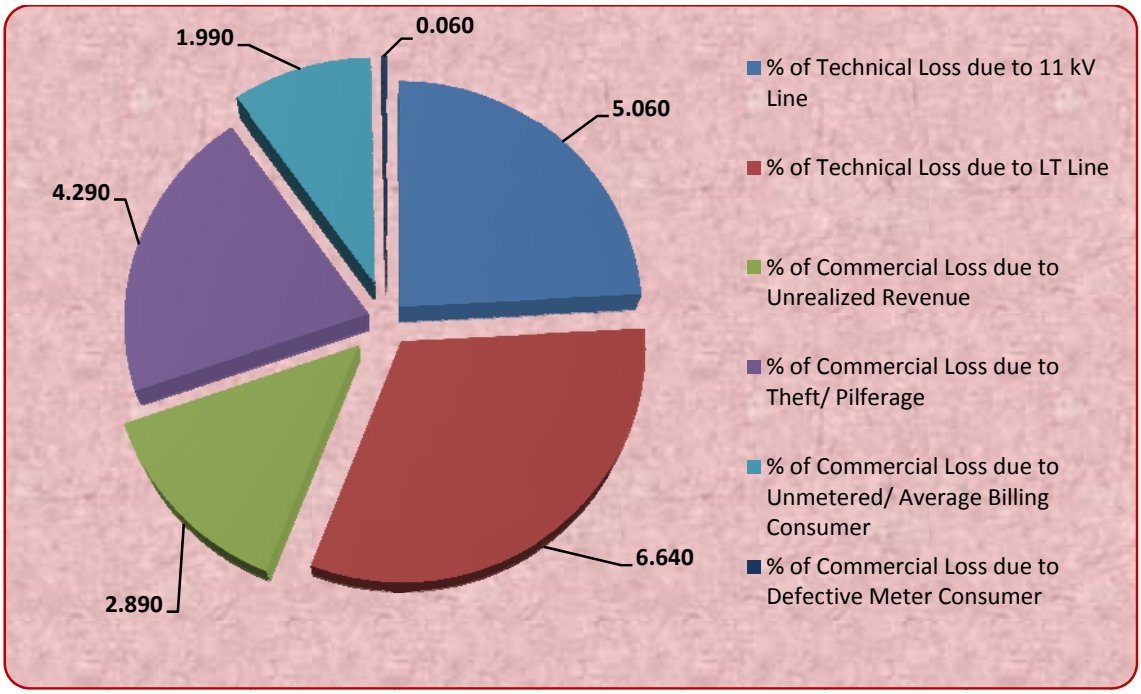

Percentage of AT&C Losses of Karnataka State is 20.94

FOR FURTHER DETAILS, PLEASE CONTACT:

- **PRADIP ROY**
  GENERAL MANAGER
  MECON LIMITED
  50, Chowringhee Road, Kolkata - 700071
  Mob: +918902499968
  Fax No.: 033-22824441
  E-mail : kolkata@meconlimied.co.in, meconkol@gmail.com

- **ROBIN DAS**
  DEPUTY GENERAL MANAGER
  MECON LIMITED
  50, Chowringhee Road, Kolkata - 700071,
  Mob: +919433331937
  Fax No.: 033-22824441
  E-mail : kolkata@meconlimied.co.in, meconkol@gmail.com

MECON TEAM

REPORT APPROVED BY :

1. **SHRI PRADIP ROY,** GENERAL MANAGER, MECON, KOLKATA

REPORT CHECKED BY :

2. **SHRI ROBIN DAS,** DGM (ELEC.) & SIC, MECON, KOLKATA
3. **SHRI RAMESH IYER,** DGM (ELEC.), MECON, BANGALORE

REPORT PREPARED BY :

4. **SHRI NIKHILESWAR CHOWDHURY,** DESIGN ENGINEER, MECON, KOLKATA
5. **SHRI SHAHNAWAZ AHMAD,** DESIGN ENGINEER, MECON, RANCHI
6. **SHRI MUKESH KUMAR JAISWARA,** DESIGN ENGINEER, MECON, KOLKATA
7. **SHRI MOINAK SARKAR,** ASST. PROJECT ENGINEER, MECON, KOLKATA